JVC

SERVICE MANUAL

DIGITAL S CAMCORDER

DY-90WU/DY-90WE

DIGITAL S

The photo shows the DY-90WU camcorder with an optional lens and viewfinder.

NOTE:

This service manual only describes the matters that are different from the DY-90.
On servicing, refer to the service manual (No. 9360R) for DY-90 together with this.

No. 9375
November 1999

100% recycled paper

COPYRIGHT © 1999 VICTOR COMPANY OF JAPAN, LTD.

TABLE OF CONTENTS

Section	Title	Page
1. SERVICE CAUTIONS AND DISASSEMBLY		
1.1	RESET OF POWER BREAKER	1-1
1.2	HOW TO REMOVE THE OUTER CASE	1-2
1.2.1	How to remove the cassette cover	1-2
1.2.2	How to remove the left side cover	1-2
1.2.3	How to open the right side cover	1-2
1.2.4	How to remove the bottom cover	1-2
1.3	HOW TO MAKE A DIAGNOSTICS OF THE BOARD	1-3
1.3.1	Main board layout diagram	1-3
1.4	REMOVING THE OPTICAL FILTER ASSEMBLY	1-4
1.5	DISASSEMBLY OF THE EACH BOARDS IN CAMERA PART	1-5
1.5.1	Disassembly of DR board	1-5
1.5.2	Disassembly of the CP board	1-5
1.5.3	Disassembly of the PS board	1-5
1.6	DISASSEMBLY OF THE EACH BOARDS IN THE VTR PART	1-6
1.6.1	Disassembly of an AUDIO & LCD board	1-6
1.6.2	Disassembly of the MAIN board	1-6
1.6.3	Disassembly of the SS/RFP board	1-6
1.6.4	Disassembly of PR board	1-7
1.6.5	Disassembly for diagnosis of the back side of the main deck	1-7
1.6.6	Disassembly the I/O JUNC board	1-7
1.7	HOW TO TAKE A CASSETTE OUT IN AN EMERGENCY	1-8
1.8	FUNCTIONS OF INTERNAL SWITCHES	1-8
1.8.1	Dip switch S1 on the CP board have the functions as described below.	1-9
1.8.2	Internal switch on CP board (S14)	1-10
1.8.3	Internal switch on SS/RFP board (S601)	1-10
1.8.4	Internal switch on MAIN board (S201)	1-10
1.8.5	EEPROM (camera)	1-10
1.8.6	Displaying version numbers of the ROMs	1-10
1.8.7	SYSTEM RESET	1-10
1.8.8	Detect area of Auto Iris	1-11
1.8.9	Tripod base	1-11
1.9	DIAG MODE	1-12
1.9.1	Structure of DIAG mode	1-12
1.9.2	How To Select Items	1-14
1.9.3	How to end the DIAG mode	1-14
1.9.4	How to set the battery alarm/end detection voltage setting (Group 3)	1-14
1.9.5	How to set the setup menu (Group 4)	1-14
1.9.6	Software version display (Group 5)	1-16
1.9.7	Self-diagnosis mode (Group 6)	1-16
1.9.8	Adjustment mode (Group 7)	1-20
1.9.9	Warning history display	1-23
1.9.10	Service item menu (Group 9)	1-24
1.10	HOW TO DETECT THE ALARM	1-24
1.11	ERROR CODES	1-25
1.12	EEPROM (VTR)	1-28
1.13	LITHIUM BATTERY	1-28
1.14	OPERATIONS OF SWITCHES AND SENSORS	1-29
1.15	How to adjust the color matrix setting	1-30
1.15.1	How to set the color matrix	1-30
1.15.2	Details of the individual setting items	1-30
2. MECHANISM ADJUSTMENT		
These MECHANISM ADJUSTMENT are same as DY-90. On servicing, refer to the service manual (No. 9360R) section 2 for these adjustment.		
3. ELECTRICAL ADJUSTMENT		
This section only describes the camera part of ELECTRICAL ADJUSTMENT. On servicing, refer to the service manual (No. 9360R) for DY-90 together with this.		
3.1	ELECTRICAL ADJUSTMENT FLOWCHART	3-1
3.1.1	Electrical adjustment flowchart for camera section	3-1
3.1.2	Electrical adjustment flowchart for video section	3-2
3.2	REQUIRED MEASURING INSTRUMENTS FOR ADJUSTMENT, STANDARD SETUP	3-3
3.2.1	Precautions on electrical adjustment	3-3
3.2.2	Test instruments required for adjustment	3-3
3.2.3	Special implements required for adjustment	3-3
3.2.4	Alignment tape specifications	3-4
3.2.5	Standard setup for adjustment (For Camera adjustment)	3-4
3.2.6	Simultaneous display in both viewfinder and monitor	3-5
3.2.7	Adjustment procedure in the adjustment mode	3-5
3.2.8	Service menu	3-6
3.2.9	Potentiometers and test point layout	3-6
3.3	ADJUSTMENT OF CAMERA PART	3-8
3.3.1	SSG adjustment	3-8
3.3.2	ENCODER adjustment	3-8
3.3.3	VIDEO PROCESS adjustment	3-10
3.3.4	CCD driver adjustment	3-14
3.3.5	BLEMISH compensation	3-14
4. CHARTS AND DIAGRAMS		
This section only describes the circuit boards that are different from the DY-90. On servicing, refer to the service manual (No. 9360R) for DY-90 together with this.		
4.10	DR CIRCUIT BOARD (INNER PATTERN)	4-
4.11	DR SCHEMATIC DIAGRAM	4-
4.12	DR CIRCUIT BOARD	4-5
4.13	ISB/ISG/ISR SCHEMATIC DIAGRAM	4-6
4.14	ISB/ISG/ISR CIRCUIT BOARD	4-7
4.15	CP SCHEMATIC DIAGRAM	4-8
4.16	CP CIRCUIT BOARD	4-9
4.17	MAIN SCHEMATIC DIAGRAM	4-10
4.18	MAIN CIRCUIT BOARD	4-21
4.25	MT SCHEMATIC DIAGRAM	4-25
4.31	I/O JUNC SCHEMATIC DIAGRAM	4-25
4.29	SW1 SCHEMATIC DIAGRAM	4-25
4.27	MT CIRCUIT BOARD	4-26
4.31	I/O JUNC CIRCUIT BOARD	4-2
4.30	SW1 CIRCUIT BOARD	4-26
4.35	IC BLOCK DIAGRAMS (camera part only)	4-27
5. EXPLODED VIEWS AND ASSEMBLY LIST		
This section only describes the EXPLODED VIEWS AND ASSEMBLY LIST that are different from the DY-90. On servicing, refer to the service manual (No. 9360R) for DY-90 together with this.		
5.1	CAMERA HEAD ASSEMBLY M1	5-3
5.2	CABINET ASSEMBLY M2	5-4
5.3	CHASSIS ASSEMBLY M3	5-6
5.6	RIGHT SIDE COVER ASSEMBLY M6	5-
6. ELECTRICAL PARTS LIST		
This section only desceibes the ELECTRICAL PARTS LIST that are different from the DY-90. On servicing, refer to the service manual (No. 9360R) for DY-90 together with this.		
6.1	DR BOARD ASSEMBLY PARTS LIST 01	6-2
6.2	ISB BOARD ASSEMBLY PARTS LIST 02	6-5
6.3	ISG BOARD ASSEMBLY PARTS LIST 03	6-6
6.4	ISR BOARD ASSEMBLY PARTS LIST 04	6-7
6.5	CP BOARD ASSEMBLY PARTS LIST 05	6-8
6.6	MAIN BOARD ASSEMBLY PARTS LIST 06	6-11
6.7	MT BOARD ASSEMBLY PARTS LIST 07	6-19
6.8	I/O JUNC BOARD ASSEMBLY PARTS LIST 08	6-20
6.9	SW1 BOARD ASSEMBLY PARTS LIST 09	6-20
7. PACKING		
7.1	PACKING ASSEMBLY M7 for DY-90WU/WE	7-1
8. TECHNICAL INFORMATION		
8.1	COMPARISON WITH PREVIOUS MODEL	8-1

JVC®

DIGITAL S CAMCORDER

DY-90W

INSTRUCTIONS

DIGITAL S

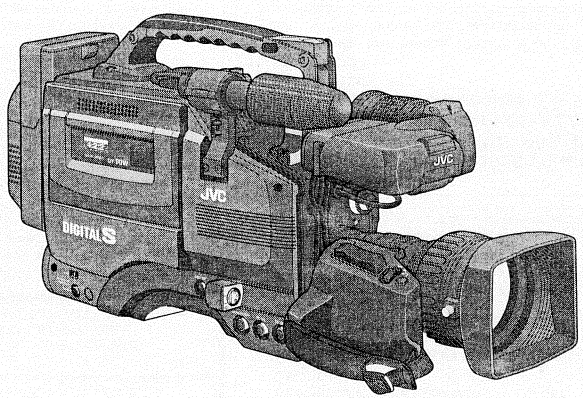

Illust shows the DY-90W camcorder with an optional lens, microphone, mic holder and viewfinder.

INTRODUCTION
CONTROLS, INDICATORS AND CONNECTORS
BASIC SYSTEM CONNECTIONS AND ADJUSTMENTS
POWER SUPPLY
PREPARATIONS
SETTING AND ADJUSTMENTS BEFORE SHOOTING
SHOOTING OPERATION
PLAYBACK MODE
TIME CODE OPERATION
SETUP MENU
FEATURES OF THE CAMERA SECTION
OTHERS

To maintain picture and sound quality, use the exclusive head cleaning cassette after every 20 hours of operation.
For details on head cleaning, refer to page 7.

SC96889:U-ver

JVC®

DIGITAL S CAMCORDER
DIGITALER S CAMKORDER
CAMESCOPE DIGITAL S

DY-90W

INSTRUCTIONS
BEDIENUNGSANLEITUNG
MANUEL D'INSTRUCTIONS

DIGITAL S

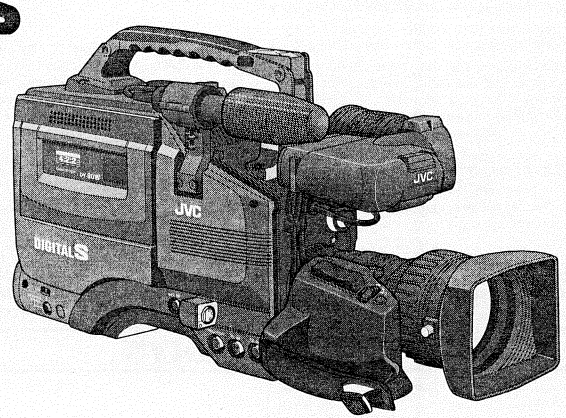

Illust shows the DY-90W camcorder with an optional lens, microphone, mic holder and viewfinder.
Abbildung zeigt den DY-90W Camkorder mit wahlweisem Objektiv, Mikrofon, Mikrofonhalter und Sucher.
L'illustration montre le camescope DY-90W avec un objectif, micro, porte-micro et un viseur en option.

INTRODUCTION
CONTROLS, INDICATORS AND CONNECTORS
BASIC SYSTEM CONNECTIONS AND ADJUSTMENTS
POWER SUPPLY
PREPARATIONS
SETTING AND ADJUSTMENTS BEFORE SHOOTING
SHOOTING OPERATION
PLAYBACK MODE
TIME CODE OPERATION
SETUP MENU
FEATURES OF THE CAMERA SECTION
OTHERS

To maintain picture and sound quality, use the exclusive head cleaning cassette after every 20 hours of operation.
For details on head cleaning, refer to page 7.

SC96890:E-ver.

SAFETY PRECAUTIONS

FOR USA AND CANADA

CAUTION

RISK OF ELECTRIC SHOCK DO NOT OPEN

CAUTION : TO REDUCE THE RISK OF ELECTRIC SHOCK, DO NOT REMOVE COVER (OR BACK). NO USER SERVICEABLE PARTS INSIDE. REFER SERVICING TO QUALIFIED SERVICE PERSONNEL.

The lightning flash with arrowhead symbol, within an equilateral triangle is intended to alert the user to the presence of uninsulated "dangerous voltage" within the product's enclosure that may be of sufficient magnitude to constitute a risk of electric shock to persons.

The exclamation point within an equilateral triangle is intended to alert the user to the presence of important operating and maintenance (servicing) instructions in the literature accompanying the appliance.

INFORMATION FOR USA

INFORMATION

This equipment has been tested and found to comply with the limits for a Class B digital device, pursuant to Part 15 of the FCC Rules. These limits are designed to provide reasonable protection against harmful interference in a residential installation. This equipment generates, uses, and can radiate radio frequency energy and, if not installed and used in accordance with the instructions, may cause harmfull interfrence to radio communications. However, there is no guarantee that interference will not occur in a particular installation. If this equipment does cause harmful interference to radio or television reception, which can be determined by turning the equipment off and on, the user is encouraged to try to correct the interference by one or more of the following measures:

- Reorient or relocate the receiving antenna.
- Increase the separation between the equipment and receiver.
- Connect the equipment into an outlet on a circuit different from that to which the receiver is connected.
- Consult the dealer or an experienced radio/TV technician for help.

CAUTION

CHANGES OR MODIFICATIONS NOT APPROVED BY JVC COULD VOID USER'S AUTHORITY TO OPERATE THE EQUIPMENT.

THIS DEVICE COMPLIES WITH PART 15 OF THE FCC RULES. OPERATION IS SUBJECT TO THE FOLLOWING TWO CONDITIONS : (1) THIS DEVICE MAY NOT CAUSE HARMFUL INTERFERENCE, AND (2) THIS DEVICE MUST ACCEPT ANY INTERFERENCE RECEIVED, INCLUDING INTERFERENCE THAT MAY CAUSE UNDESIRED OPERATION

INFORMATION (FOR CANADA) RENSEIGNEMENT (POUR CANADA)

This Class B digital apparatus complies with Canadian ICES-003.

Cet appareil numérique de la class B est conforme á la norme NMB-003 du Canada.

WARNING:
TO REDUCE THE RISK OF FIRE OR ELECTRIC SHOCK, DO NOT EXPOSE THIS APPLIANCE TO RAIN OR MOISTURE.
This unit should be used with 12V DC only.
CAUTION:
To prevent electric shocks and fire hazards, do NOT use any other power source.

NOTE:
The rating plate (serial number plate) is on the top frame.

CAUTION
To prevent electric shock, do not open the cabinet. No user serviceable parts inside. Refer servicing to qualified service personnel.

AVERTISSEMENT :
POUR EVITER LES RISQUES D'INCENDIE OU D'ELECTROCUTION, NE PAS EXPOSER L'APPAREIL A L'HUMIDITE OU A LA PLUIE.
Ce magnétoscope ne doit être utilisé que sur du courant direct en 12V.
ATTENTION :
Afin d'eviter tout resque d'incendie ou d'électrocution, ne pas utillser d'autres sources d'alimentation électrique.

REMARQUE :
La plaque d'identification (numéro de série) se trouve sur le panneau arrière de l'appareil.

WARNING ON LITHIUM BATTERY
The battery used in this device may present a fire or chemical burn hazard if mistreated. Do not recharge, disassemble, heat avobe 100°C (212°F) or incinerate.
Replace battery with Matsushita Electric CR2032, use of another battery may present a risk of fire or explosion.
- Dispose of used battery promptly.
- Keep away from children.
- Do not disassemble and do not dispose of in fire.

For Sweden

VARNING
Explosionsfara vid felaktigt batteribyte.
Använd samma batterityp eller en ekvivalent typ som rekommenderas av apparattillverkaren.
Kassera använt batteri enligt fabrikantens instruktion.

For Norway

ADVARSEL
Lithiumbatteri–Eksplosjonsfare.
Ved utskifting benyttes kun batteri som anbefalt av apparatfabrikantetn.
Brukt batteri returneres apparatieverandøren.

For Denmark

ADVARSELI
Lithiumbatteri–Eksplosionsfare ved fejlagtig håndtering.
Udskiftning må kun ske med batteri af samme fabrikat og type.
Lever det brugte batteri tilbage til leverandøren.

For Finland

VAROITUS
Paristo voi räjähtää, jos se ön virheellisesti asennettu.
Vaihda paristo ainoastaan laitevalmistajan suoaittelemaan tyyppiin.
Hävitä käytetty paristo valmistajan ohjeiden mukaisesti.

Thank you for purchasing the DY-90W DIGITAL S CAMCORDER.

DIGITAL S

This unit is a DIGITAL S format camcorder. Video cassette tapes which are not marked DIGITAL S cannot be used with this unit.

Precautions for 4 channel audio internal editing

Use a 4 channel audio compatible Digital S editing unit (BR-D92, etc.) when performing audio insertion editing of a 4 channel audio recorded tape.
When performing audio insertion editing with a Digital S editing unit which is not 4 channel audio compatible (BR-D80, BR-D85 and BR-D750), the recorded audio signals on the DA3 and DA4 channels are erased.

MAIN FEATURES

- 16:9 aspect ratio compatibility.
  The picture size of the video signal can be switched between 16:9 and 4:3 by a menu operation.
- Compact, lightweight, low-power consumption design.
- High picture quality thanks to the DIGITAL S format.
  The 4:2:2 component digital processing of the format ensures recording and playback with high picture quality.
- High sound quality thanks to the 4-channel PCM audio.
  High-quality digital audio with 16-bit, 48 kHz sampling is provided for 4 channels.
- Concentrated LCD display (with back light)
  The concentrated LCD panel shows the time code and CTL count, tape remaining time, remaining battery power, audio levels, VCR's setup menus, hour meter data and a variety of warning indications. It is back-lighted to facilitate viewing under low light conditions.
- Time code reader/generator
  The built-in time code reader/generator can be used to record SMPTE: U-ver./EBU: E-ver. time code and user's bits.
- Time code input/output connectors for slave lock capability
  This unit can be slave-locked to an external time code generator which is connected to the time code input.
  The data in the built-in time code generator is output from the time code output terminal.
- 4-line audio input connectors
  Four lines of audio input are available including camera microphone, interview microphone and line input. Highly reliable balanced XLR connectors are provided for microphone and line input, for ensuring improved signal-to-noise ratio and enhanced sound quality.
- AEF (Automatic Edit Function) enables neat switching between scenes.
- Date/time data recording
  Apart from the SMPTE U-ver./EBU: E-ver. time code area, another time code area is provided for the recording of data on the date and time of the day.
- Built-in loudspeaker for audio checking
  The input audio can be monitored in record or EE mode and the reproduced audio can be monitored in play mode.
  The loudspeaker also outputs an alarm tone in case an abnormal condition occurs with the unit.
- Rec check function for quick recording review
- Scene change cueing function
  Enables searching of the end of the recorded section for the next recording when the recorded tape is loaded.
- LOLUX captures scenes never before possible because of low lighting conditions.
  In this mode the CCD chip is maximized for low light sensitivity. This Super Sensitivity is ideal for special shooting conditions with almost no lighting. Good color balance is maintained even down to 0.75 lx illumination.
- Multi-Zone Auto Iris Detection Circuit
  Multi-zone iris detection circuit ensures optimum iris position even in backlit conditions or when a bright subject moves in a frame. Over-under level switchable.
- Safety Zone indication
  In addition to center mark on/off capability, safety zone indication for the 16:9 screen format is available.
- Zebra pattern video level indication
  Indicated area can be selected with 70 - 80%, 85 - 95%, OVER 95% or OVER 100%.
- Full Auto Shooting (FAS) function
  The FAS function provides a wide range of compatibility with shooting conditions which varies as you move between indoors and outdoors or between bright and dark locations. It is not necessary to change the switch and filter positions every time you move.
- Color temperature conversion filters for "3200 K", "5600 K", "5600 K + 1/16 ND" and "3200 K + Efect (cross)". (U-ver.)
- Colour temperature conversion filters for "3200 K", "5600 K", "5600 K + 1/8 ND" and "5600 K + 1/64 ND" (E-ver.)
- Variable scan: U-ver.
  Flicker bars in the display image of computer monitors are caused by the differing scan rate of the computer monitors. The Variable Scan function can minimize this effect by tuning the camera shutter speed to the precise scan rate of the display screen. The small increments range from 60.1 Hz to 2067.0 Hz.
- Variable scan: E-ver.
  Flicker bars in the display image of computer monitors are caused by the differing scan rate of the computer monitors. The Variable Scan function can minimize this effect by tuning the camera shutter speed to the precise scan rate of the display screen. The small increments range from 50.1 Hz to 2053.6 Hz.
- Set up box provided
  Data for the recording condition set with the menu switches on the camera section can be registered on the set up box. The data registered on the set up box can be recalled and loaded on the main unit for a quick setup.

The following symptoms will appear when the tapes recorded on other units (including DY-90W) are recorded or played back on this machine.

- The transient section between scenes recorded on other units may appear disturbed.
- Digital noise appears during playback because of tracking errors.

- Not to record important materials contents for two or three minutes in the beginning of tape.
- We cannot assume the liabilities which may derive from the impossibilities of normal recording or playback in case of failure with this unit or the video cassette in use.

CONTENTS

INTRODUCTION

SAFETY PRECAUTIONS 2
MAIN FEATURES 3

1. INTRODUCTION

1-1 System Configuration 6
1-2 Precautions for Proper Use 6
1-3 Routine and Periodical Maintenance 7
1-4 Video Cassette to be Used 8
1-5 Battery Pack to be Used 8
1-6 Condensation 8
1-7 Camera and Lens 9

2. CONTROLS, INDICATORS AND CONNECTORS

2-1 Front Section 10
2-2 Left Side Section (Cassette side) 11
2-3 Right Side Section 12
2-4 Top Section 19
2-5 Rear Section 20
2-6 Counter Display Contents 22
2-7 Lens (optional) 23
2-8 1.5-Inch Viewfinder VF-P116(optional) 24
2-9 Viewfinder Display 25
• Warning Indicators Inside the Viewfinder 25
• Viewfinder Screen Display 25

PREPARATIONS

3. BASIC SYSTEM CONNECTIONS AND ADJUSTMENTS

3-1 Basic System 30
3-2 Attaching the Zoom Lens (optional) 31
3-3 Attaching the Viewfinder (optional) 31
3-4 Attaching the Tripod Base 32
3-5 Attaching the Optional Microphone 33
3-6 How to Replace Backup Lithium Batteries 34

4. POWER SUPPLY

4-1 AC Operation 35
4-2 Battery Pack Operation 35
• Using JVC's NB-G1U or Flat Shape Type Battery Pack .. 36
• Using an Anton-Bauer Battery Pack 37
• Remaining Battery Power Display/Precautions for the Battery Pack 38

BASIC OPERATIONS

5. PREPARATIONS

5-1 Turning the Power ON 39
5-2 Cassette Loading and Unloading 40

6. SETTING AND ADJUSTMENTS BEFORE SHOOTING

6-1 Camera Control Settings for Adjustment 41
6-2 Viewfinder Adjustment 42
6-3 External Monitor Adjustment 42
6-4 Back Focus Adjustment 43
6-5 White Balance Adjustment 44
• White Balance Adjustment 44
• Full-Time Auto White Balance (FAW) 44
6-6 Switch Settings of the VCR Section 45
6-7 PCM audio recording channels for audio input signals .. 46
6-8 Audio Input Signal Selection 46
6-9 Recording Level Adjustment 47
6-10 Monitoring Audio During Recording 48

7. SHOOTING OPERATION

7-1 Basic Recording Operation 49
7-2 Save Mode 51
7-3 If Unit is Left In Record-Pause (Standby) Mode 51
7-4 Checking Recorded Contents in Record-Pause Mode (Recording Check Function) 52
7-5 Cueing the Scene Change Point 52

8. PLAYBACK MODE

8-1 Playback Procedure 53
8-2 Fast-Forward, Rewind 54
8-3 Search 54

APPLICATION

9. TIME CODE OPERATION

9-1 Displaying Time Code 55
9-2 Presetting and Recording of Time Code 56
• Time Code Presetting Procedure 56
• Presetting User's Bit Data 57
9-3 Recording Time Codes Continuously From Time Codes Recorded on Tape 57
9-4 Recording Time Codes by Slave-Locking the Built-in Time Code Generator with the External TCG 58
9-5 Reproducing Time Codes 59
9-6 Sub-Time Code (Date, Time) 60
• Displaying Sub-Time Code 60
• Setting the Date and Time 61
• Reproducing the Date and Time 61

CONTENTS

10. SETUP MENU

10-1 VCR Setup Menu 62
• VCR Setup Menu Configuration 62
• Displaying and Setting VCR Setup Menus 63
• Setup Menu Contents 64
10-2 Camera Section Setup Menu 65
10-3 Camera Section MAIN MENU Screen 66
10-4 Camera Section ADVANCED MENU Screen 68
• Operation Screen 69
• Process Screen 70
10-5 Resetting Setup Data 71

11. FEATURES OF THE CAMERA SECTION

11-1 Full-Time Auto White Balance (FAW) 73
11-2 IRIS (Brightness) Adjustment 74
• Lens Iris Adjustment 74
• Zebra Pattern Display During Manual Adjustment 74
11-3 Shooting the Screen Image on the Computer Monitor ... 75
11-4 Gain (Sensitivity) Adjustment 76
• Gain Switching 76
• Gain Boost Under Lolux Condition 76
11-5 Switch Setup According to Illumination and Object 77
• Switch Functions 77
• Full Auto Shooting (FAS) Function 77
11-6 Set Up Box Operation 78

OTHERS

12. OTHERS

12-1 Connection with a Switcher 80
12-2 Trouble Shooting 81
• Alarm Indications 81
• Warning message on viewfinder 83
• Troubles with Error Code Outputs 84
• Troubles without Error Code Outputs 86
12-3 Hour Meter Display 87
12-4 Index 88
12-5 Specifications 90
• Optional Accessories 91
• External Dimensions 91

1. INTRODUCTION

For servicing
See DY-90W service manual (No. 9375) page 1-1 "RESET OF POWER BREAKER".

1-1 System Configuration

The standard configuration of the DY-90W is as shown below.

STANDARD CONFIGURATION

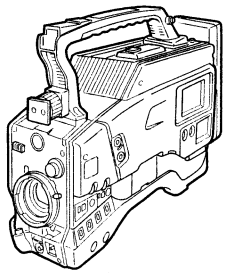

Camcorder (DY-90W)

Lithium battery

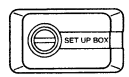

Set up Box

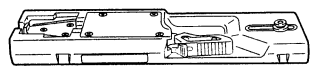

Tripod base

1-2 Precautions for Proper Use

- Supply voltage
  Make sure that the power is between 11 V and 15 V DC. If the power voltage is too low, abnormal color and increased noise may occur. Do not exceed 15 V DC in any case, or the unit could be damaged.
- Where there are strong electromagnetic waves or magnetism, for example near a radio or TV transmitter, transformer, motor, etc., the picture may contain noise and the colors may be incorrect.
- When a wireless microphone or wireless microphone tuner is used near the camera, the tuner could pick up noise. In such a case, select another channel.
- Avoid using or placing the unit in places;
  - subject to extreme heat or cold;
  - with excessive dirt or dust;
  - with high humidity or moisture;
  - subject to smoke or vapor such as near a cooking stove;
  - subject to strong vibrations or on an unstable surface.
  - also do not leave the unit for long hours in a parked car under direct sunlight or near room heating equipment.
- Protect the unit from being splashed with water (especially when shooting in the rain).
- Protect the unit against penetration of dust when using it in a place subject to sandy dust.
- Use the unit in an upright position. If placed on its side, heat release efficiency will deteriorate, adversely affecting the tape transport.
- Do not drop or hit it against a hard object.
  (Special care is required to avoid shocks during transportation.)
- Circuit breaker
  The unit incorporates a circuit breaker. If the power is shut down by the action of the circuit breaker, check if there are abnormalities in the connected power supply.
  When the power supply is found to be normal, turn it on again. If the circuit breaker is activated a second time, please contact your nearest JVC service agent.
- Remove the video cassette before transporting the unit.
- Do not insert an object other than a video cassette in the cassette insertion slot. Be sure to close the cassette cover when the unit is not to be used for a long period
- To avoid condensation inside the unit, do not transport it between places with a large difference in temperature.
- Do not set the POWER switch to OFF or remove the power cable during recording or playback. Otherwise the tape may be damaged.
- When the unit is not in use, be sure to set the POWER switch to OFF in order to save power consumption.
- Cleaning the body: Wipe body with a dry, soft cloth (such as cheesecloth). When it is extremely dirty, soak the cloth in a solution of neutral detergent, wring it out and then wipe.
  To prevent deformation of the body, etc. and to avoid operation hazards, do not allow volatile liquids such as benzine and thinner to touch the body, and do not wipe it with a cloth soaked in such a liquid.
  If the equipment is soiled with water, oil, solvent, etc., wipe over with soft cloth or cotton first, then clean with gauze, etc. soaked in denatured alcohol.
- The camera may be unstable in the period immediately after the power is turned on, but this is not a malfunction.
- When the power ON/OFF switch is operated too fast, the power may not turn on and a malfunction may occur. In this case, turn the power switch to OFF and wait for a few seconds (more than 1 second) before turning the power to ON.
- Do not playback an PAL recorded tape, as this may cause noise to the audio and video signals even when the unit enters the stop mode. If this happens, remove the cassette tape so that the unit returns to its normal state. (U-ver.)
- Do not playback an NTSC recorded tape, as this may cause noise to the audio and video signals even when the unit enters the stop mode. If this happens, remove the cassette tape so that the unit returns to its normal state. (E-ver.)
- Make sure that the monitor is terminated with 75 Ω before connecting the MONITOR OUTPUT connector. If it is not terminated with 75 Ω the video signal will not output when the power is on because of the power saving features equipped with this unit.
- Setup level: U-ver. only
  The MONITOR OUTPUT connector of this unit outputs the video signal with setup at the factory. When the video signal without setup is requested , consult your nearest JVC authorized agent. Only the video signal without setup is recorded on the tape.

For servicing
See DY-90 service manual (No. 9360R) page 2-6 "2.4.3 Cleaning".

1-3 Routine and Periodical Maintenance

This unit incorporates precision mechanical parts, which will collect dirt, wear out and deteriorate as the unit is used. On the other hand, when the unit has been used for a long period, the heads, drums and tape transport mechanisms also collect dirt deposited on them. Also, dust which penetrates the inside of the VCR section especially during outdoor use will promote the wear and deterioration of mechanical parts by causing poor contact between tape and heads or failing to maintain the video and audio quality at high levels. To prevent wear and deterioration, clean the mechanical parts using a head cleaning tape as routine maintenance. But cleaning with a head cleaning tape alone is not enough for cleaning the entire tape transport mechanism. it is also recommended to apply periodical maintenance (inspection) to prevent troubles which may be caused by the sudden occurrence of failure.
As the replacement, adjustment and servicing of parts require advanced skill and equipment, please consult the person in charge of professional video equipment at your nearest JVC-authorized service agent.

Head Cleaning

- To maintain high video and audio quality, clean the heads by using the special head cleaning tape about every 20 hours.
  If head cleaning is not performed periodically, a type of mosaic noise called block noise may appear in the picture or sound may be interrupted.

Block Noise

- Use the optional DCL-5 as the head cleaning tape.
- Do not use head cleaning tapes other than specified. Read the instructions of the head cleaning tape for its operating procedure and precautions.
- When dust is deposited on the video head of the VCR section, the RF indicator lights up on the display during the back-space operation in record-pause mode. At this time, the warning message "VTR WARNING (HEAD)" is displayed on the viewfinder. During recording, this indicator does not light up and the warning message on the viewfinder is not displayed.

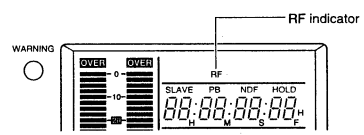

Periodical Maintenance

Contents : Check or replace the following mechanical parts according to the running time.

Running Time	500H	1000 H	1500H	2000H
Drum ass'y (including heads)	●	●	●	●
Head cleaner	●	●	●	●
Tape guides & rollers	○	○	○	●
Fixed heads	○	○	☆	●
Belts & pinch rollers	○	●	○	●
Drive parts	○	○	☆	●

- The drum assembly (including heads) and the head cleaner should be replaced every 500 hours.
  ○: Clean, check and adjust.
  ☆: Clean and check. Replace as required.
  ●: Replace.
- The maintenance contents may be variable depending on the operating environment and method. Therefore, the above data should be considered as a reference.

Time management

The running time of the VCR section can be confirmed with the hour meter display (which shows the drum running time). For details, see "HOUR METER DISPLAY" on page 87.

For consultations related to the maintenance programming or cost, please contact the person in charge of professional video equipment at your nearest JVC-authorized service agent.

For servicing
See DY-90 service manual (No. 9360R) page 2-5 "2.4.2 Check and maintenance table".

1-4 Video Cassette to be Used

- Only cassette bearing the " DIGITAL S " logo can be used with this unit.
- Video cassettes marked with S-VHS or VHS cannot be used with this unit. If you insert an S-VHS or a VHS cassette in the VCR, it will be ejected automatically.
- Video cassettes cannot be used upside down.
- Avoid storing a video cassette with unevenly wound tape, as this may damage the tape. Rewind it to the beginning before placing a cassette into storage.
- After a video cassette tape has been used repeatedly, it becomes unable to maintain full performance due to an increase in noise caused by dropouts, etc. Do not continue to use a dirty or damaged tape, as this will reduce the rotary head life.

- The video cassette tape marked DIGITAL S is provided with a REC switch for use in preventing accidental erasure.
  - Slide the REC switch to OFF to protect the required recording in the tape from being overwritten.
  - To record on the tape, slide the REC switch to ON.

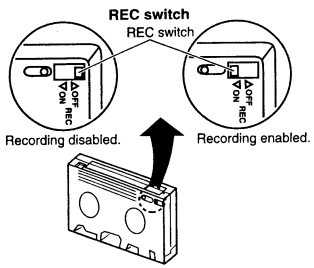

1-5 Battery Pack to be Used

This unit can use any of the following battery packs.
- JVC battery pack : NB-G1U
- Flat Shape Type bettery pack
- Anton-Bauer battery pack : Trimpack 13/14 Series, Magnum 13/14 Series, Compack 13/14 Series. Propack 13/14 Series.

To display the remaining battery power accurately, set "BATT. TYPE SELECT" in setup menu Group 4 according to the type of the battery pack in use. (See page 64)

- An Anton-Bauer battery pack cannot be attached to this unit directly.

  An additional battery holder is required.
  - Battery holder: Anton-Bauer model QRQ27.

  See page 37 for battery holder attaching method.

1-6 Condensation

- When the unit which has been cooled down completely in a cold place is carried to a warm place, the moisture contained in the warm air may attach to the head drum or tape guides and be cooled into water droplets. This phenomenon is referred to as condensation (dewing). When this occurs in a DY-90W, the head drum and tape guides are covered with droplets allowing the tape to be stuck to them, leading to tape damage.
- Condensation occurs in the following cases:
  - When the unit is suddenly moved from a cold place to a warm place.
  - When the room heater has just started or when the unit is exposed directly to cold air from the air conditioner.
  - When the unit is placed in a very humid place.

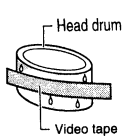

- When condensation occurs with this unit, the DEW on the display lights up, the error code "Err 02:1" appears on the counter display (see page 85).

  A warning message "VTR WARNING (DEW)" is displayed on the viewfinder screen.

  To assist this, leave the unit with the power ON and wait until the error code "Err 02:1" and the DEW indicator disappear from the display.

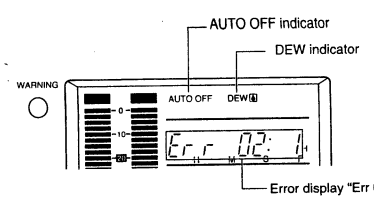

1-7 Camera and Lens

CAMERA

CCD Smear and Blooming

- Due to the physical structure of the CCD in this unit it is possible to induce vertical streaking or smear when shooting an extremely bright light source.
- Another effect is the expansion of light around a bright light or object called Blooming.

  Just as you protect your image against lens flare (internal lens reflections): please be careful when shooting a bright light source.

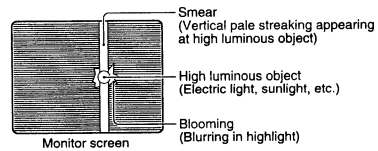

Gain, Noise

- Higher levels of output gain result in a decrease in the signal to noise ratio, possibly resulting in a noisy picture.

Moire or Aliasing

- Shooting stripes or fine patterns may cause a jagged effect or a banding in fine mesh patterns.

  Try repositioning the lens zoom to change the frequency of the detail information and eliminate the distortions.

High Temperatures

- High temperatures can cause CCD sensor pixels to malfunction with the effect of white dots in the image. This condition could damage the CCD, and certainly raises the "fixed pattern" noise level which CCDs have, thus giving a noisy picture.

LENS

- The camera lens should be protected externally with a Clear or UV filter against accidental scratching, touching or dirt. The external lens cap should be used whenever possible.
- When the lens is changed, take special care to avoid contaminating the inner lens surface and camera gate/optical block area with moisture or dust.
- Do not expose the lens or viewfinder to strong sunlight or place in a strong light source.
  - Exposure of the lens or viewfinder to strong sunlight or other strong light sources will cause eye injuries.
  - Continued exposure of the lens or viewfinder to sunlight will damage the internal condensing lens, resulting in malfunction and possible fire.

2. CONTROLS, INDICATORS AND CONNECTORS

2-1 Front Section

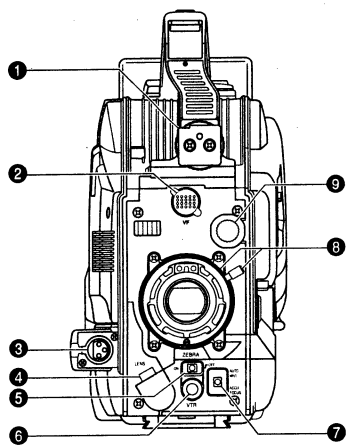

❶ Viewfinder mount base, sliding securing ring

Mount the VF-P116W viewfinder (optional) on the base and secure it using the sliding securing ring.
See "Attaching the Viewfinder" on page 31.

❷ [VF] Viewfinder connector

Connect to the cable from viewfinder.

❸ [DA2 IN (MIC IN + 48 V)] DA2 (Microphone) input connector

This balanced XLR three connector is for microphone level only.
A 48 V DC is supplied as the power supply for the microphone (Use only phantom microphone). Connect the JVC MV-P615 or other microphone.
(The supplied 48V DC can be turned OFF. See "MIC POWER" on Page 71.)
The audio signal from this connector is recorded on DA2 of the PCM audio channel. It is also recorded on the linear track of the tape for audio search.

Pin No.	Function
1	GND
2	HOT
3	COLD

See "Attaching the Optional Microphone" on page 33.

❹ [LENS] Lens control connector

Connect 12-pin lens control cable from lens.
Lens connector function

Pin No.	Function	Pin No.	Function
1	RET switch	7	IRIS position
2	VTR trigger	8	IRIS A/R INPUT
3	GND	9	EXTENDER position
4	Lens AUTO/MANU control	10	ZOOM position
5	IRIS control	11	—
6	+12V DC	12	—

❺ [ZEBRA] Switch

When this switch is ON, a zebra pattern is displayed with a brightness corresponding to 70% to 80% video levels on the viewfinder screen. This pattern can be used as a reference for manual adjustment of the lens iris.
When adjusting the iris manually, adjust it so that the zebra patterns are displayed in the section which you want to stress in the object.
- The default value is 70% - 80%. The luminance level can be changed with the ZEBRA setting in the Advanced Menu screen.
See "ZEBRA item" on page 70.

❻ [VTR] VTR trigger button (record start/stop button)

With the VCR set in record pause mode, record start/stop can be effected with this button.
(It is interlocked with the lens and the VTR trigger button on the side panel.)

❼ [AUTO WHT./ACCU FOCUS] switch

AUTO WHITE :
First position a white object to occupy 80% of the center of the image.
Setting this switch to the upper position ("AUTO WHT.") will provide automatic adjustment for white balance.
It is not activated in preset, full auto shooting, full-time auto white balance and color bar modes.
See "White Balance Adjustment" on page 44.
ACCU-FOCUS :
When this switch is set to "ACCU FOCUS" in the lower position, the lens iris will be forced to open for approximately ten seconds.
The object depth can be reduced and the lens focusing can be adjusted more accurately.

CAUTION :
As the automatic shutter is activated here, flicker may appear on the screen depending on the lighting conditions (such as a fluorescent lamp, etc.)
Operation is not possible in the LoLux mode.

❽ Lens mounting ring/Lens lock lever

Hold the lens and use the knob to twist the ring anticlockwise to release lens.
To mount lens make sure the lens guide pin fits well, and then twist the ring clockwise until firm.
See "Attaching the Zoom Lens (Optional)" on page 31

❾ [FILTER] Color temperature conversion filter control knob

This knob changes the internal filter of color temperature.
See "Filter" on page 41.

2. CONTROLS, INDICATORS AND CONNECTORS

2-1 Front Section

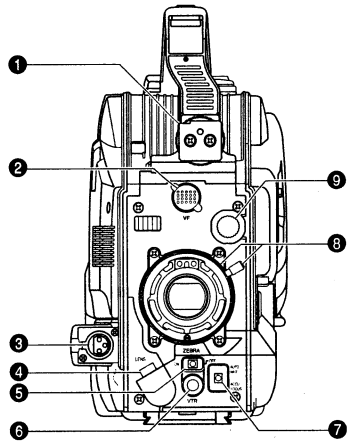

❶ Viewfinder mount base, sliding securing ring

Mount the VF-P116W viewfinder (optional) on the base and secure it using the sliding securing ring.
See "Attaching the Viewfinder" on page 31.

❷ [VF] Viewfinder connector

Connect to the cable from viewfinder.

❸ [MIC 2 IN + 48 V] Microphone 2 input connector

This balanced XLR three connector is for microphone level only.
A 48 V DC is supplied as the power supply for the microphone (Use only phantom microphone). Connect the JVC MV-P615 or other microphone.
(The supplied 48V DC can be turned OFF. See "MIC POWER" on page 71.)
When using a microphone with this connector, refer to ❺ [MIC1/MIC2] SELECT switch on page 15 and set the switch to MIC2.

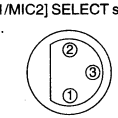

Pin No.	Function
1	GND
2	HOT
3	COLD

See "Attaching the Optional Microphone" on page 33.

❹ [LENS] Lens control connector

Connect 12-pin lens control cable from lens.
Lens connector function

Pin No.	Function	Pin No.	Function
1	RET switch	7	IRIS position
2	VTR trigger	8	IRIS A/R INPUT
3	GND	9	EXTENDER position
4	Lens AUTO/MANU control	10	ZOOM position
5	IRIS control	11	—
6	+12V DC	12	—

❺ [ZEBRA] Switch

When this switch is ON, a zebra pattern is displayed with a brightness corresponding to 70% to 80% video levels on the viewfinder screen. This pattern can be used as a reference for manual adjustment of the lens iris.
When adjusting the iris manually, adjust it so that the zebra patterns are displayed in the section which you want to stress in the object.
- The default value is 70% - 80%. The luminance level can be changed with the ZEBRA setting in the Advanced Menu screen.
See "ZEBRA item" on page 70.

❻ [VTR] VTR trigger button (record start/stop button)

With the VCR set in record pause mode, record start/stop can be effected with this button.
(It is interlocked with the lens and the VTR trigger button on the side panel.)

❼ [AUTO WHT./ACCU FOCUS] switch

AUTO WHITE :
First position a white object to occupy 80% of the center of the image.
Setting this switch to the upper position ("AUTO WHT.") will provide automatic adjustment for white balance.
It is not activated in preset, full auto shooting, full-time auto white balance and colour bar modes.
See "White Balance Adjustment" on page 43.
ACCU-FOCUS :
When this switch is set to "ACCU FOCUS" in the lower position, the lens iris will be forced to open for approximately ten seconds.
The object depth can be reduced and the lens focusing can be adjusted more accurately.

CAUTION :
As the automatic shutter is activated here, flicker may appear on the screen depending on the lighting conditions (such as a fluorescent lamp, etc.)
Operation is not possible in the LoLux mode.

❽ Lens mounting ring/Lens lock lever

Hold the lens and use the knob to twist the ring anticlockwise to release lens.
To mount lens make sure the lens guide pin fits well, and then twist the ring clockwise until firm.
See "Attaching the Zoom Lens (Optional)" on page 31

❾ [FILTER] Colour temperature conversion filter control knob

This knob changes the internal filter of colour temperature.
See "Filter" on page 40.

2-2 Left Side Section (Cassette Side)

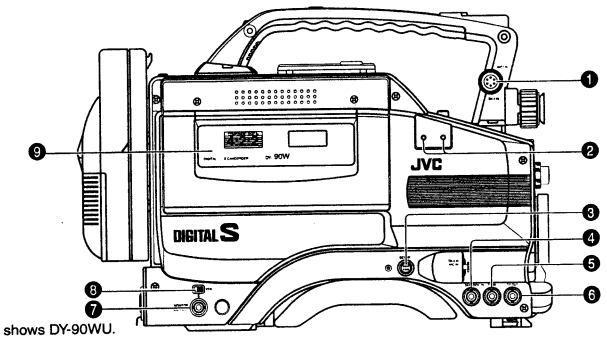

Figure shows DY-90WU.

❶ [DA4 IN (MIC 1 IN)] DA4 (Microphone 1) Input connector (6-pin)

With the mic holder (optional), the following microphone models can be used.
- MV-P616 (mono)
- MV-P612 (stereo/mono)
- The audio signal from this connector is recorded on DA4 of the PCM audio channel.
  * It is not recorded on the linear track of the tape for audio search.
  * When using a stereo microphone, the audio signal is only recorded on the L channel.

Pin No.	Function	Pin No.	Function
A	—	D	L (Hot)
B	9 V DC	E	L (GND)
C	GND	F	—

❷ Mic holder mounting screw holes

The mic holder KA-A90 (Optional) can be mounted here.

❸ [SET UP] connector

Connect the provided set up box to this connector.
The camera's menu data set with the ❷ FILE switch A, B or OFF on page 14 can be read out onto the set up box.
Also the camera's menu data stored in the set up box can be recalled and written onto the FILE switch A, B or OFF.
- For readout from and writing on the set up box, see page 78.

❹ [GEN LOCK IN] connector (BNC)

External reference composite video or black burst video input. This unit cannot be genlocked with the VCR playback signal.
See "Connection with a switcher" on page 80.

Note :
When the power is switched ON while external sync signal is input, the screen moves in a vertical direction for a few seconds. This is not a malfunction.

❺ [TC IN] connector (BNC)

Input connector for the SMPTE-standard LTC signal. The built-in time code generator can be slave-locked with the input time codes.
For the slave lock of time code, see page 58.

❻ [TC OUT] connector (BNC)

Output connector for the LTC signal from the built-in time code generator.
The time code recorded on the tape is not output in play mode.

❼ [MONITOR OUTPUT] connector (BNC)

- Composite video signal output connector.
  Outputs the video signal selected by the ❽ [CAM/VTR] switch.
- The signal with setup will be output. (U-ver. only)
- Setup menu items for camera section, VCR section, time code or date/time data are not output.

Note :
Make sure that the monitor is terminated with 75 Ω before connecting the MONITOR OUTPUT connector. If it is not terminated with 75 Ω the video signal will not output when the power is on because of the power saving features equipped with this unit.

❽ [CAM/VTR] Monitor output CAM/VTR switch

This selects the video signal to output to the MONITOR OUTPUT connector or viewfinder.
CAM : Regardless of which mode, the EE image from the camera video signal is output.
VTR : Playback image is output during the playback mode. An EE image is output during other modes than the Play Mode.
* The backspace function during the Record-Pause Mode and the recording check function are also carried out on the playback mode.

Regardless of the switch setting, playback sound is output during the playback mode and EE sound is output during other modes.

❾ Cassette cover

When the DY-90W is in POWER ON mode, pressing the EJECT button on the top of the VCR section opens this cover so that a cassette tape can be inserted or removed from the unit. The cover can be locked automatically by pushing and closing it.

To prevent penetration of foreign objects in the unit, do not leave the unit with the cassette cover open.

2-3 Right Side Section

[Camera Setting Section]

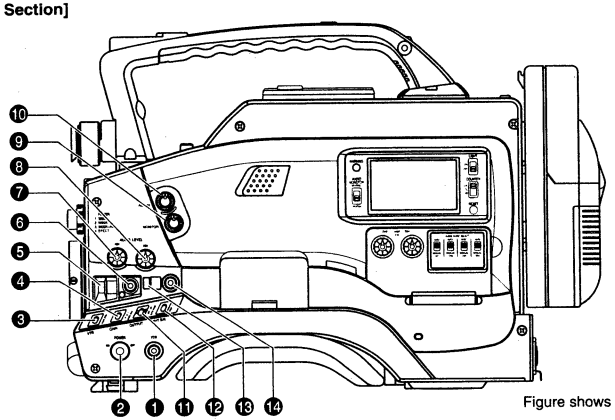

Figure shows DY-90WU.

❶ [VTR] VTR trigger button (Recording Start/Stop)

With the VCR set in record pause mode, record start/stop can be effected with this button.
(It is interlocked with the lens and the VTR trigger button on the front sections.)

❷ [POWER] switch

Turn the power ON and OFF with this switch.
- With this switch set to ON, the DY-90W status differs depending on the setting of the ❸ VTR (SAVE/STBY) switch.

❸ [VTR] switch

Select the DY-90W status when the power is turned ON with this switch.
SAVE : Drum rotation stops and the DY-90W enters the tape protection mode. When a recordable cassette tape is loaded, pressing the [VTR] button enters the record mode. However in this case, recording will start after a short interval.
STBY : When a recordable cassette tape is loaded, the DY-90W enters the record-pause mode and the drum continues to rotate. In this mode, when the [VTR] button is pressed, the DY-90W immediately enters the record mode.
- The mode selected by this switch is displayed on the status screen in the viewfinder.

❹ [GAIN] switch

Electronically boosts the light sensitivity when there is insufficient illumination on the subject. The boosting level differs depending on the switch position as follows:
H : 18 dB (boosted to approximately 8 times the original)
M : 9 dB (boosted to approximately 3 times the original)
L : 0 dB (no boosting is applied)
- The boosting level for each switch position can be changed with the advanced menu screen. (See page 69.)
  The more the boosting level is increased, the more the resulting image will be noisy.

❺ [AUTO IRIS] Auto iris level switch

This switch selects the automatic iris adjustment reference value according to the condition in which the camera is used.
BACK L : Under back light (Open the iris about 1 step from the standard level.)
NORMAL : Normal condition
SPOT L : Under spotlight (Close the iris about 1 step from the standard level.)
See page 77.

❻ [FULL AUTO] Full auto shooting ON/OFF button and indicator

- This momentary switch turns this function on and off, with a indicator light.
- Full auto shooting combines the auto iris, auto level control and full auto white (FAW) to automatically adjust the video signal level and the white balance to their optimum levels.
- The iris is placed in automatic even if the iris mode switch of the lens is in manual.
- The gain will vary continuously to the maximum of +18 dB. The shutter speed will vary continuously to the minimum of 1/240 (U-ver.) / 1/200 (E-ver.) of a second.
  See [Full Auto Shooting (FAS) function] on page 77.

2-3 Right Side Section (Cont'd)

❼ [DA1 AUDIO LEVEL] Control (U-ver.)

Adjusts the audio recording level of the [DA1 IN] connector on the rear panel.
This adjustment is available only when the ❺ [DA1 AUDIO MODE SELECT] switch on page 15 is set to MANUAL.

❽ [DA2 AUDIO LEVEL] Control (U-ver.)

Adjusts the audio recording level of the ❻ [DA2 IN (MIC IN)] connector on the front panel.
This adjustment is available only when the [DA2 AUDIO MODE SELECT] switch on page 15 is set to MANUAL.

❼❽ [MIC REC LEVEL] control (E-ver.)

Adjust the recording level of the camera's microphone (MIC1 and MIC2) with this control.
This control is valid only when the [MIC SELECT] switch is set to "MANUAL".

- (Mono) 2/1L control
  Adjusts the recording level of the microphones:
  - Microphone of MIC 2 connector.
  - Monaural microphone of MIC 1 connector
  - Stereo microphone L channel of MIC 1 connector.
- 1R control
  Adjusts the recording level of stereo microphone R channel of MIC1.

❾ [MONITOR] Audio monitor control

Adjusts the volume of the monitoring loudspeaker and earphone. The audio is muted when this control is set to the minimum position.

❿ [ALARM] control

Turn to control the volume of the alarm tone which is output from the monitoring loudspeaker or earphone in case of a warning or other abnormal condition occurring with the DY-90W.
Turn this control anticlockwise to reduce the volume.
Setting this control to the minimum position mutes the alarm tone.

⓫ [OUTPUT] Color bar/Camera • Auto knee switch

This switch is used to select the output signal. When the video signal from the shooting camera is selected, the auto knee function is available.

BARS : Outputs the color bar signal. In this mode, the auto knee function is not available. Set to this position when adjusting the video monitor or when recording the color bar signal.

CAM • AUTO KNEE OFF :
Outputs the video signal from the shooting camera. In this mode, the auto knee function is not available.

CAM • AUTO KNEE ON :
Outputs the video signal from the shooting camera. In this mode, the auto knee function is available.

AUTO KNEE function
When shooting a foreground object with a high-brightness background, if the brightness level is set for a foreground human being, etc., the background image will be blurred with white. In such a case, when the auto knee function is used, a clearer background is obtained.
It is effective especially in the following cases:

- When shooting a human being in the shade on a fine day
- When shooting a high-contrast scene

> **Note :**
> If a fast moving high-brightness section like a car in sunlight is shot, the auto knee function may change the brightness of the entire image along with the motion of the object. In this case, set the auto knee function to OFF.

⓬ [WHT.BAL] White balance switch

There are three white balance modes possible with this switch.

A : If white balance is performed with the switch in this position it will be memorised into A.

B : If white balance is performed with the switch in this position it will be memorised into B.

PRST (PRESET) : A non-erasable white balance setting to 3200K. An emergency setting for outdoors with a 5600K or 5600K+ND filter turret setting.

- FAW (Full-time Auto White) mode can be set to A, B or PRESET with the ADVANCED MENU (see page 69).
  In the FAW mode, video color temperatures are constantly sampled for automatic adjustment to a proper white balance.

⓭ [BLACK] Black stretch/black compression switch

Switches the gain for the dark section of the image.
Set to an appropriate position depending on the video signal to be shot.

BLACK STRETCH :
By stretching the signal only for the dark section, contrast in the dark portion of the image is enhanced.

NORMAL :
Standard mode.

BLACK COMPRESS :
When an entire image is relatively light and the contrast is low, the gain of the dark section is compressed to increase the contrast.

⓮ [LOLUX] LOLUX on/off button

This button toggles the LOLUX mode on and off.

- LOLUX gain gives extremely low light level sensitivity for special applications. This will result in an increase of 33 dB in the LOLUX mode.
- LOLUX operation takes priority over normal gain operation. If the unit is placed in the LOLUX mode when it is in full auto shooting mode, the auto level control (ALC) (one of the full auto shooting functions) will be made inactive, so that the LOLUX mode is given preference (FAW still remains active).

2-3 Right Side Section (Cont'd)

[Setup/Mode Setting Section]

Figure shows DY-90WU.

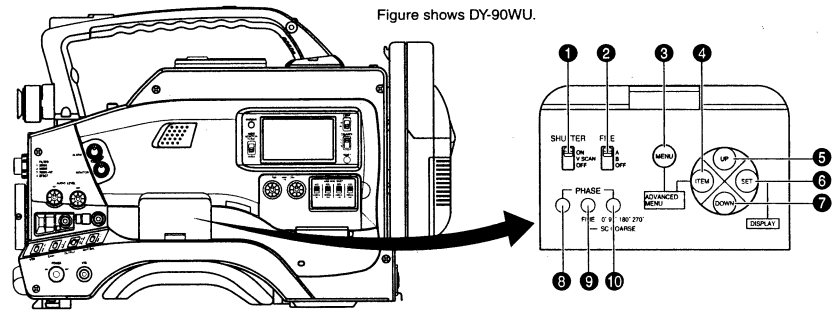

❶ [SHUTTER] Shutter switch

ON : This mode allows setting of different shutter speeds.
To change shutter speed push the UP ❺ or DOWN ❼ buttons.

V.SCAN : This mode helps adjust the shutter speed to match the scan rate of computer monitor.
Place the switch down in the V.SCAN position and then use the UP or DOWN buttons to adjust the speed.

OFF : This mode corresponds to the standard 1/60.

- The shutter speed is displayed in the viewfinder. (See page 29.)

■ WHEN TO USE

A shutter speed of 1/50th second is too slow to prevent blurring from normal actions when a subject is moving.
This gives a smooth and natural effect when watching motion normally, but in certain applications the video is to be displayed in slow motion or as a freeze. The blurring in this case reduces the possible sharpness of the image.
As one increases the shutter speed the amount of light collected is less and less, so consideration should be given to the effects of openning the iris and increasing gain.
Opening the iris reduces depth of field and causes foreground and background objects to go out of focus. This is a useful artistic technique.

❷ [FILE] File switch

This switch is used to read the registered file on the MENU screen of the camera section.

A : Shooting can be carried out with the set values registered to the FILE A.

B : Shooting can be carried out with the set values registered to the FILE B.

OFF : Shooting can be carried out with the set values registered to the FILE OFF.

The items in the ADVANCED MENU require the registration operation. (Switch position: During A or B)
See page 68.

❸ [MENU] button

❹ [ITEM] button

❺ [UP] button

❻ [SET/DISPLAY] button

When this button is pressed in the normal mode screen, the viewfinder display mode is changed. Each time this button is pressed, the viewfinder display is changed in the order Status 0, Status 1, Status 2 and then returned to Status 0.
For details on "Status Screen", see page 25.

❼ [DOWN] button

> The above buttons ❸ to ❼ are used when setting the Setup Menu items for the camera section.
> The menu screen is displayed in the viewfinder.
> See page 65.

❽ [PHASE H] Horizontal phase control

Use this control to adjust the H sync phase while the genlock signal is input.

❾ [PHASE SC FINE] Color sub-carrier phase control

Use this control to fine-adjust the SC phase while the genlock signal is input.

❿ [PHASE SC COARSE] Color sub-carrier phase coarse adjustment control

Use this control to coarse-adjust the SC phase while the genlock signal is input.
The SC phase will toggle between 0°, 90°, 180° and 270°.
See "Connection with a switcher" on page 80 for ❽ through ❿.

2-3 Right Side Section (Cont'd)

[Audio Setting Section]

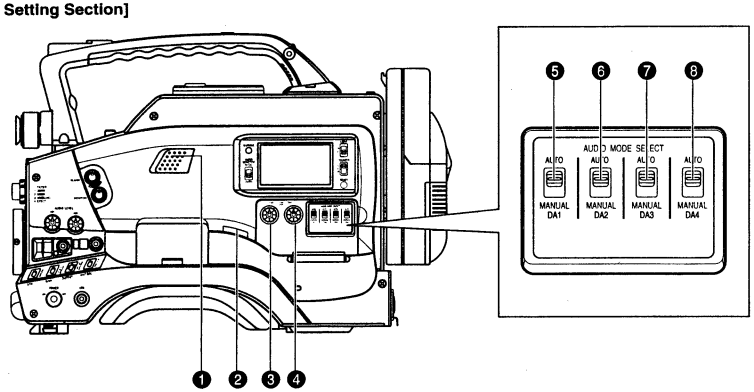

❶ Monitoring loudspeaker

- Enables EE monitoring of the input audio signal during recording, in the record-pause mode or in the stop mode.
- Outputs the playback sound in the playback mode.
- The PCM audio channels to be output can be selected using the ❷ AUDIO MONITOR switch on page 16.
- The loudspeaker volume can be adjusted with the AUDIO MONITOR control.

The audio from the loudspeaker is defeated when an earphone is plugged into the EARPHONE jack. The warning alarm tones are also output through this loudspeaker.
For details, see pages 81 and 82.

❷ Lithium Battery Installation Case

Install a lithium battery in this case. The battery is used for the backup of the time code and the date/time data. The DY-90W is delivered without the battery installed. Install the lithium battery provided (CR2032). See page 34 for information about how to install it.

❸ [DA3 AUDIO LEVEL] control

Adjusts the audio recording level of the [DA3 IN] connector on the rear panel.
The volume can be controlled when ❼ [DA3 AUDIO MODE SELECT] switch is set to MANUAL.

❹ [DA4 AUDIO LEVEL] control

Adjusts the audio recording level of the [DA4 (MIC1 IN)] connector on the left side section.
The volume can be controlled when ❽ [DA4 AUDIO MODE SELECT] switch is set to MANUAL.

❺ [DA1 AUDIO MODE SELECT] switch

Selects the audio recording level adjusting method for the [DA1 IN] connector on the rear panel.

AUTO : The audio recording level is held at the reference level even when sounds greater than the reference input level are input.
The recording level does not increase when the input level is low.

MANUAL : The recording level can be adjusted with ❼ DA1 AUDIO LEVEL control on page 13.

❻ [DA2 AUDIO MODE SELECT] switch

Selects the audio recording level adjusting method for the [DA2 IN (MIC IN)] connector on the front section.

AUTO : The audio recording level is held at the reference level even when sounds greater than the reference input level are input.
The recording level does not increase when the input level is low.

MANUAL : The recording level can be adjusted with ❻ DA2 AUDIO LEVEL control on page 13.

❼ [DA3 AUDIO MODE SELECT] switch

Selects the audio recording level adjusting method for the [DA3 IN] connector on the rear panel.

AUTO : The audio recording level is held at the reference level even when sounds greater than the reference input level are input.
The recording level does not increase when the input level is low.

MANUAL : The recording level can be adjusted with ❸ DA3 AUDIO LEVEL control.

❽ [DA4 AUDIO MODE SELECT] Switch

Selects the audio recording level adjusting method for the [DA4 IN (MIC1 IN)] connector on the front section.

AUTO : The audio recording level is held at the reference level even when sounds greater than the reference input level are input.
The recording level does not increase when the input level is low.

MANUAL : The audio recording level can be adjusted with ❹ DA4 AUDIO LEVEL control.

2-3 Right Side Section (Cont'd)

[Audio Setting Section]

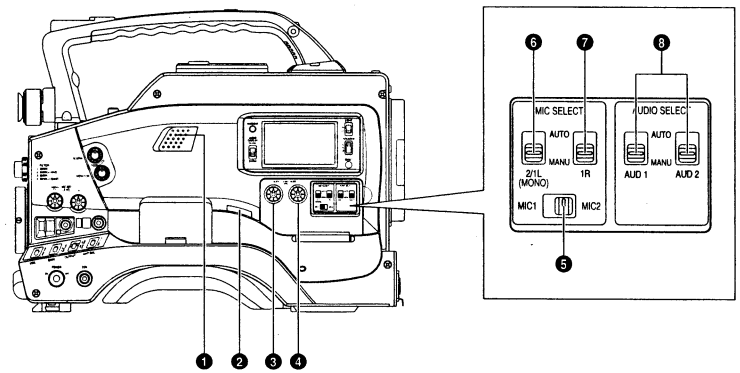

❶ Monitoring loudspeaker

- Enables EE monitoring of the input audio signal during recording, in the record-pause mode or in the stop mode.
- Outputs the playback sound in the playback mode.
- The PCM audio channels to be output can be selected using the ❷ AUDIO DISPLAY switch on page 16.
- The loudspeaker volume can be adjusted with the AUDIO MONITOR control.

The audio from the loudspeaker is defeated when an earphone is plugged into the EARPHONE jack. The warning alarm tones are also output through this loudspeaker.
For details, see pages 81 and 82.

❷ Lithium Battery Installation Case

Install a lithium battery in this case. The battery is used for the backup of the time code and the date/time data. The DY-90W is delivered without the battery installed. Install the lithium battery provided (CR2032). See page 34 for information about how to install it.

❸ [AUD1 LEVEL] control

Adjusts the recording level of the audio signal input to the [AUD 1 IN] terminal on the rear panel. This control is effective when ❽ AUDIO 1 SELECT switch is set to the "AUTO" position.

❹ [AUD2 LEVEL] control

Adjusts the recording level of the audio signal input to the [AUD 2 IN] terminal on the rear panel. This control is effective when ❽ AUDIO 2 SELECT switch is set to the "AUTO" position.

❺ [MIC1/MIC2] select switch

Select the camera's microphone mode with this switch.

MIC1 : Records the audio signal of the microphone connected to the [MIC1] connector.

MIC2 : Records the audio signal of the microphone connected to the [MIC2] connector.

❻ [MIC2/1L (MONO)] auto/manual select switch

Selects the recording level adjusting method for the camera microphones:

- Microphone of MIC 2 connector.
- Monaural microphone of MIC 1 connector
- Stereo microphone L channel of MIC 1 connector
- MIC 1 or MIC 2 can be selected with the ❺[MIC1/MIC2] SELECT switch.

AUTO : The audio recording level is held at the reference level even when sounds greater than the reference input level are input.
The recording level does not increase when the input level is low.

MANU : The recording level can be adjusted with ❼ (MONO) 2/1L REC LEVEL control on page 13.

❼ [MIC1R] auto/manual select switch

This switch selects the recording level adjusting method for the R-channel of the stereo microphone connected to the [MIC1] connector.

AUTO : The audio recording level is held at the reference level even when sounds greater than the reference input level are input.
The recording level does not increase when the input level is low.

MANU : The recording level can be adjusted with ❼ 1R REC LEVEL control on page 13.

❽ [AUD1•2] auto/manual select switch

Selects the recording level adjusting method for the audio signals input to the AUDIO INPUT connectors on the rear panel. Selection is made for each signal input to AUD 1 IN and AUD 2 IN connectors separately.

AUTO : The audio recording level is held at the reference level even when sounds greater than the reference input level are input.
The recording level does not increase when the input level is low.

MANU : The recording level can be adjusted with ❸ or ❹ AUDIO REC LEVEL control.

2-3 Right Side Section (Cont'd)

[VCR Display]

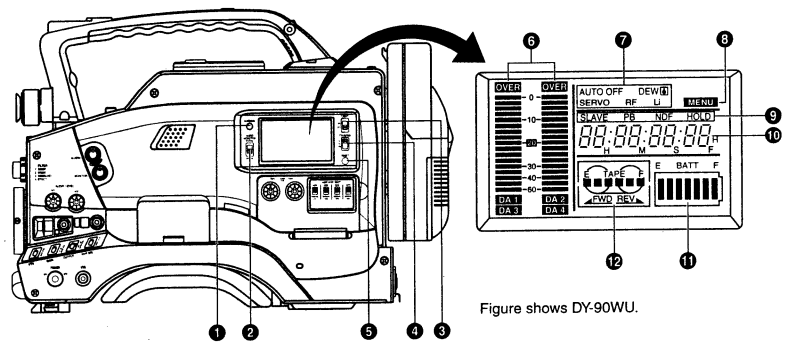

Figure shows DY-90WU.

❶ [WARNING] indicatior
This indicator lights or blinks in red in the case of a warning condition related to the remaining tape time, remaining battery power or other abnormal condition in the unit.
For details, see pages 81 and 82.

❷ [AUDIO MONITOR] switch
This switch is used for selection of the PCM audio channel for the audio level meter, audio monitor output or the audio playback output.
DA1/DA2 : Audio signals from the PCM audio DA1 and DA2 channels are output.
DA3/DA4 : Audio signals from the PCM audio DA3 and DA4 channels are output.

Note:
Regardless of this switch the DA1/DA2 channel audio signal is in playback the during Search Mode.

❸ [LIGHT] switch
Turns the display back light ON or OFF.
ON : The display is back-lighted.
OFF : The display is not back-lighted.
(Keep this switch to OFF during battery operation of the DY-90W or when it is required to reduce the power consumption for a certain reason.)

❹ [COUNTER] switch
Selects the contents displayed on the LCD counter.
CTL : Set to this position to display the CTL counter.
TC : Set to this position to display time codes or when presetting the time code.
UB : Set to this position to display the user's bits of time codes or presetting the user's bit.

- Time codes or user's bits can be displayed provided that the TC DISP switch in the VCR Setup Block is set to TC. If it is set to SUB TC, the date and time data is displayed in its place.

❺ [RESET] button
- Press to reset the CTL counter value.
- Pressing the button during time code or user's bit presetting operation resets the time code or user's bit data to "00:00:00:00".

❻ Audio level meters
- Shows the audio input level of the DA1 and DA2 channels in the record mode or EE mode.
  For selection of the audio channels to be displayed, use the ❷ AUDIO MONITOR switch.
- The peak output level is held for approximately 2 seconds.

Note:
The level meter activated immediately after the power is switched ON. This is not a malfunction.

2-3 Right Side Section (Cont'd)

❼ Warning indicators
■ AUTO OFF indicator
Lights when a non-recoverable error (e.g. tape winding error, drum stopped, etc.) occurs with the VCR. This indicator also lights if condensation occurs.
For details, see "TROUBLES WITH ERROR CODE OUTPUTS" on page 84.
■ DEW indicator
Lights when condensation (dewing) occurs on the drum or other mechanism in the unit.
The unit rejects all operations while this indicator is lit.
When the condensation has disappeared, the indicator turns off and the unit accepts operations again.
■ SERVO indicator
Lights when the drum servo is troubled during recording to indicate that normal recording is not being made.
■ RF indicator
Lights when the video head is clogged.
The head clog is detected during back-space between different scenes. Note that it is not detected during recording.

- Should this indicator light up, clean the head using the special head cleaning tape.
  See the manual for the head cleaning tape (DCL-5) which is specifically made for this unit.

■ Li indicator
This is the lithium battery indicator which lights when the lithium battery which backs up data of the built-in time code generator is nearly exhausted and indicate the necessity of replacement.
See page 34 for information about How to Replace Backup Lithium Batteries.

❽ MENU indicator
This indicator lights when the setup menu mode is engaged by pressing ❶ MENU button on page 18.

❾ Time code-related indicators
■ SLAVE indicator
This is the slave lock indicator which lights when the built-in time code generator is slave-locked (synchronized) with the LTC time code signal input at the TC IN connector.
For the slave lock of the time code, see page 58.
■ PB indicator
This is the time code playback indicator which lights when the time code is in playback mode.
■ NDF indicator (U-ver. only)
This is non-drop frame indicator which lights when the framing mode of the built-in time code generator or the reproduced time code in play mode is in the non-drop frame mode.
This indicator does not light in drop frame mode.
• If lights permanently when the CTL counter is in use.
■ HOLD indicator
Lights when the time code generator display is held by pressing the HOLD button in the VCR Setup Block.
The time code or user's bit can be preset while this indicator is lit.

❿ Counter display
- Usually, this section shows the data of the CTL counter, time code or user's bit. The display mode can be selected with the ❹ COUNTER switch.

* With the COUNTER switch set to "TC" or "UB", when ❽ TC DISP switch on page 18 is set to the "SUB TC" position, time and date are displayed.

- Displays the setup menu data when the DY-90W is in the setup menu mode by pressing ❶ MENU button on page 18. The setup menu includes the hour meter (drum operating time).

- This section shows an error code when an abnormal condition occurs with the VCR.
  For details on the counter display, see page 22.

⓫ Remaining battery power indicator
Shows the remaining battery power with a 7-dot segment bar display.
- To display the remaining battery power accurately, set the setup menu item "BATT. TYPE SELECT" according to the type of the battery pack in use.
  For details on the remaining battery power display, see page 22.

⓬ Cassette/tape direction/remaining tape time indicators
- Cassette tape : Lights when the unit is loaded with a cassette tape. Blinks during ejection or tape loading.
- Tape direction : One of the indicators lights according to the tape transport direction.
  FWD REV
- Remaining tape : The remaining tape situation is shown with a 6-dot segment bar display.
  E TAPE F

For details on the remaining tape display, see page 22.

2-3 Right Side Section (Cont'd)

[VCR Setup Block]

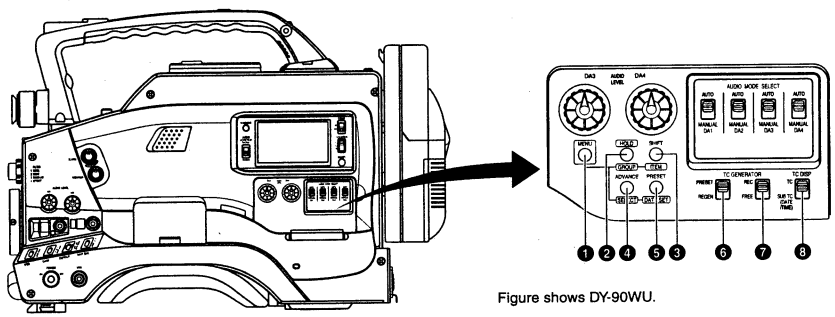

Figure shows DY-90WU.

❶ [MENU] button
Press this button to enter the setup menu mode.
When the setup menu mode is engaged, the "MENU" indicator in the LCD display lights and the counter display is changed to the menu indication.
In the setup menu mode, pressing this button resumes the normal mode.

❷ [HOLD/GROUP] button
- Press when presetting the time code or user's bit. The presently displayed data is held (the HOLD indicator lights on the display) and the leftmost digit of the counter blinks. Pressing this button during time code or user's bit presetting cancels the operation and recalls the previous display contents.
- In setup menu mode, this button is used to select the menu group.

❸ [SHIFT/ITEM] button
- During time code or user's bit presetting, press to select the digit to be set. Each press of the button shifts the digit to be set (which blinks) to the right.
- In setup menu mode, this button is used to select the menu item.

❹ [ADVANCE/SELECT] button
- During time code or user's bit presetting, press to select the value of the digit to be set. Each press of the button increases the number by 1.
- In setup menu mode, this button is used to select the value of a menu item.

❺ [PRESET/DATA SET] button
- During time code or user's bit presetting, press to save the set value in the preset memory. The set time code or user's bit will be preset in the time code generator.
- In setup menu mode, this button is used to save the menu item setting the data in the memory.

- For details of the time code or user's bit presetting, see page 56.
- For details on the setup menus, see page 62.
- The buttons from ❷ to ❺ above are also used in setting the date and time of SUB TC data. For the date and time setting, see page 61.

Time code generator setting switches

❻ [PRESET/REGEN] switch
Selects the time code generator mode between PRESET and REGEN.
PRESET : Preset mode. Set to this position when newly presetting and recording the time code. Also use this position when the unit is to be slave-locked to an external time code generator connected to the TC IN connector.
REGEN : Regeneration mode, in which the unit reads existing time codes on the tape and records time codes by succeeding them. Set to this position when you want to connect additional time codes to a tape in which time codes have already been recorded as far as the middle.

❼ [REC/FREE] run switch
Selects the time code running mode while the time code generator is in preset mode. This switch is not effective in the REGEN mode.
REC : The time code runs only during recording. This position allows you to record continual time codes when recording scenes one after another.
FREE : The time code runs permanently. Set to this position when the unit is slave-locked with an external time code generator.
- If this position is used when recording scenes one after another, the time codes become discontinuous at the change points between scenes.

❽ [TC DISP] switch
When the ❹ COUNTER switch on page 16 is set to TC or UB, it selects the type of time code to be displayed on the counter display.
TC : Ordinary time codes or user's bits are displayed.
SUB TC : Data in another time code area (sub-time code area) is displayed. This unit records the date and time data in this area.
For details, see "SUB-TIME CODE" on page 60.

2-4 Top Section

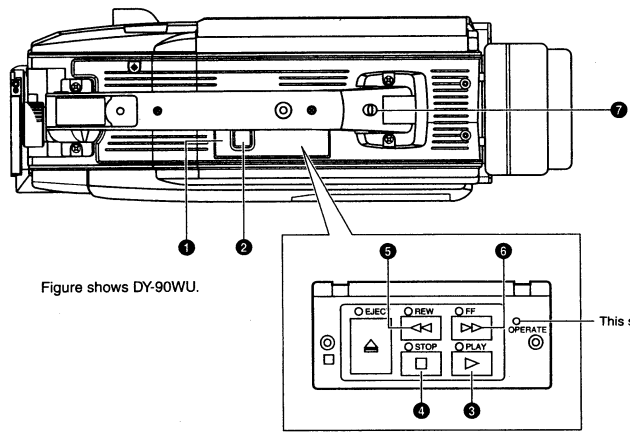

Figure shows DY-90WU.

❶ Operation cover
Open this cover when operating the playback mode.
Otherwise keep this cover closed.

❷ [EJECT] button
Press to eject the cassette tape. It can be pressed even when the operation cover is closed. The LED indicator above the EJECT button lights up during the ejection operation.
* The cassette tape cannot be ejected during recording even if this button is pressed.

❸ [PLAY] button
Press to start playback. In play mode, the unit outputs the video and audio signals of normal playback and the LED indicator above the PLAY button lights.
* If the auto tracking is active at the moment the play mode starts, the playback video will be interfered with digital noise. The audio output during this period is the linear track audio. The same audio signals as the PCM audio DA1/DA2 channels are recorded on the linear tracks of the tape. The PCM audio DA3 and DA4 channels are not recorded on the linear tracks.
* This button is not effective if pressed in the REC mode.

❹ [STOP] button
Press to enter stop mode. The drum keeps rotating in stop mode. However, when stop mode has continued for about 30 minutes, the VCR section enters tape protect mode, in which the drum stops rotation and the tape tensioner is released. It takes more time than usual to enter the record or play mode from the tape protect mode. The LED indicator above the STOP button lights in stop and tape protect modes.
- The time until tape protect mode is initiated can be set to 1, 5 or 30 minutes with setup menu item "LONG PAUSE TIME SELECT".
* The unit will not enter the stop mode even if this button is pressed during recording.

❺ [REW] button
Press to rewind tape.
- Pressing the button in stop or fast forward mode initiates rewind mode. The LED indicator above the REW button lights in this mode.
- Pressing the button during playback or forward search initiates reverse search at about 6 times the normal play speed. The LED indicators above the PLAY and REW buttons light during reverse search.
The search audio recorded in the linear track is reproduced during reverse search.

❻ [FF] button
Press to fast forward tape.
- Pressing the button in stop or rewind mode initiates fast forward mode. The LED indicator above the FF button lights in this mode.
- Pressing the button during playback or reverse search initiates forward search at about 6 times the normal play speed. The LED indicators above the PLAY and FF buttons light during forward search.
The search audio recorded in the linear track is reproduced during forward search.

❼ Back tally lamp
This lamp lights up when this unit enters the record mode. It blinks during the transition to the record mode. It also blinks when an error occurs on the DY-90W.
- This lamp does not light up when the "BACK TALLY" item in the camera's main menu screen is set to OFF. (See page 67.)

Note:
The buttons ❷ ~ ❻ are not effective during recording.

2-5 Rear Section

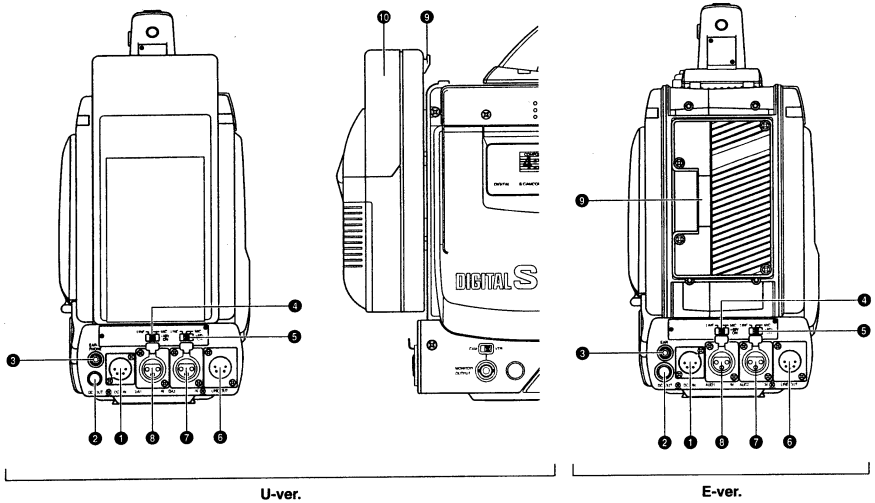

❶ [DC IN] connector (XLR 4-pin)

Power input connector for 12 V DC. Connect with the optional AA-G10 or AA-P250 battery charger.
When a cable is connected here, the power supply from the battery pack is interrupted and the source is switched to the power supplied through this connector.

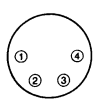

NO.	Signal
①	GND
②	—
③	—
④	DC12V

❷ [DC OUT] connector

Power output connector to a wireless microphone transmitter, etc. The supply voltage is identical to the voltage supplied to the unit (DC 12V max. 0.1 A).

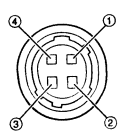
(Surface profile)

NO.	Signal
①	GND
②	—
③	—
④	DC12V (Power through)

❸ [EARPHONE] earphone jack

This is a stereo mini-jack for use in connecting an audio monitoring earphone. Plug in a 3.5 mm dia. earphone or headphone plug.
The earphone can also be used to monitor alarm tones depending on situations.
The sound from the monitoring loudspeaker is interrupted when an earphone is connected here.

❹ [DA1 IN LINE/MIC] select switch

Select the audio signal input to the ❽ DA1 IN connector.
LINE : Set to this position when connected to the audio equipment, etc. The reference input level is +4 dBs.
MIC : Set to this position when the microphone is connected. The reference input level is -60 dBs.
MIC +48V ON : Set to this position when the microphone requiring +48 V power supply (JVC MV-P615, etc.) is connected.
A +48 V DC is supplied from this connector.

❺ [DA3 IN LINE/MIC] select switch

Select the audio signal input to the ❼ DA3 IN connector.
LINE : Set to this position when connected to the audio equipment, etc. The reference input level is +4 dBs.
MIC : Set to this position when the microphone is connected. The reference input level is -60 dBs.
MIC +48V ON : Set to this position when the microphone requiring +48 V power supply (JVC MV-P615, etc.) is connected.
A +48 V DC is supplied from this connector.

2-5 Rear Section (Cont'd)

❻ [LINE OUT] connector (XLR 5-pin)

Outputs the PCM audio DA1/DA2 or DA3/DA4 channel signals in analog audio.
The audio channels to be output can be selected by the ❷ AUDIO MONITOR switch on page 16.
- Outputs the input audio signal in the record, record-pause and stop modes.
- Outputs the playback audio signal in the playback mode.
- Alarm sound is not output.

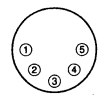

NO.	Signal
1	GND
2	DA1/3 (H)
3	DA1/3 (C)
4	DA2/4 (H)
5	DA2/4 (C)

❼ [DA3 IN] DA3 input connector (XLR 3-pin) (U-ver.)

Connect the external audio equipment or microphone to this connector. Set the ❺ DA3 IN LINE/MIC select switch according to the connected equipment.
The audio signal from this connector is recorded on the DA3 of the PCM audio channel.
* It is not recorded on the linear track of the tape for audio search.

❽ [DA1 IN] DA1 input connector (XLR 3-pin) (U-ver.)

Connect the external audio equipment or microphone to this connector. Set the ❹ DA1 IN LINE/MIC select switch according to the connected equipment.
The audio signal from this connector is recorded on the DA1 of the PCM audio channel.
It is recorded on the linear track of the tape for audio search.

(AUDIO IN connector)

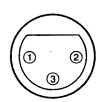

NO.	Signal
1	GND
2	HOT
3	COLD

❾ Battery case release button (U-ver.)

Push to unlock the battery case cover. The battery case cover should be opened while pushing this button.

❿ Battery case (U-ver.)

Load a Flat Shape Type battery pack or the JVC NB-G1U battery pack.
For details, see "USING JVC'S NB-G1 OR FLAT SHAPE TYPE BATTERY PACK" on page 36.

❼ [AUD2 IN] Audio 2 input connector (XLR 3-pin) (E-ver.)

Connect the external audio equipment or microphone to this connector. Set the ❺ AUD 2 IN LINE/MIC select switch according to the connected equipment.

❽ [AUD1 IN] Audio 1 input connector (XLR 3-pin) (E-ver.)

Connect the external audio equipment or microphone to this connector. Set the ❹ AUD 1 IN LINE/MIC select switch according to the connected equipment.

For information about which channel of the tape the audio signal from the audio input connectors ❼, ❽ is recorded, see page 64.

(AUDIO IN connector)

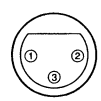

NO.	Signal
1	GND
2	HOT
3	COLD

❾ Battery holder (E-ver.)

Mount the Anton-Bauer battery pack here.
For battery information and the attaching/detaching method of the battery, see page 35.

2-6 Counter Display Contents

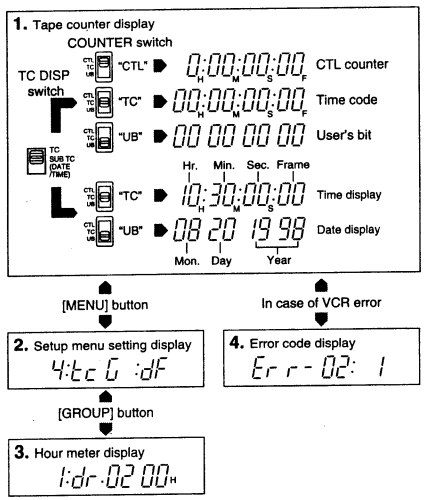

The counter display shows the following 4 types of information.

1. **Tape counter display**
   The counter display usually functions as a tape counter (hour, minute, second, frame). It can be switched to a CTL counter, time code or user's bit display by using the COUNTER switch. (Provided that the TC DISP switch is set to TC)
   - CTL counter : Time between –9 hr. 59 min. 59 sec. 29 frames and 9 hr. 59 min. 59 sec. 29 frames can be displayed.
   - Time code : Time between 0 hour and 23 hr. 59 min. 59 sec. 29 frames can be displayed.
   - User's bit : Hexadecimal number from 0 to F is displayed in 8 digits.

By setting the TC DISP switch under a cover on the right side panel to SUB TC, the time and date data can be displayed here.
- When the COUNTER switch is set to
  TC : The time (hour, minute, second, frame) is displayed.
  UB : The date : (month, day, year) is displayed.

- Press the MENU button to switch to the VCR setup menu setting display.

2. **Setup menu setting display**
   This display is used when setting the setup menus.
   After having set the setup menus, press the MENU button to return to the tape counter display.
   For details, see "VCR SETUP MENUS" on page 63.

3. **Hour meter display**
   The hour meter is displayed in the setup menu Group 1.
   The hour meter data refers to the head drum running time.

4. **Error code display**
   The error code is displayed automatically in case an abnormal condition occurs with the VCR section.
   For details of error codes, see "TROUBLES WITH ERROR CODE OUTPUTS" on page 84.

Remaining Tape Time Display

The 6-dot segment bar display shows the remaining tape time in record and play modes. The lighted segment bars decrease as the remaining tape decreases.
The reference tape time is as shown below.
(■ : Lighted. ⁘ : blinked.

E TAPE F ■■■■■■	Near the beginning of tape
E TAPE ■■■■■■	More than 25 minutes of remaining tape. ("F" extinguished.)
E TAPE ■■■□□□	10 to 15 minutes of remaining tape. (This display represents the begining of the tape in the case of DS-10 tape.)
E TAPE ■□□□□□	2 to 5 minutes of remaining tape.
E ⁘TAPE⁘ ■□□□□□	Less than 2 minutes of remaining tape. (The last dot and "TAPE" blink.)
⁘E⁘TAPE⁘ □□□□□□	End of tape. ("TAPE" and "E" blink.)

- When the tape has ended completely, a warning is provided by an alarm tone, etc.
- The remaining tape information is not displayed when no cassette tape is loaded or during the remaining tape calculation which takes place immediately after a cassette tape is inserted.

Remaining Battery Power Display

The 7-dot segment bar display shows the remaining battery power. The lighted segment bars decrease as the remaining battery power decreases.
- To display the remaining battery power accurately, set the setup menu item "BATT. TYPE SELECT" according to the type of the battery pack in use.

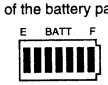

All segment bars light when a fully-charged battery pack is attached.

The last 2 segment bars and "BATT" start to blink when the battery is nearly exhausted. Replace with a fully-charged battery pack.

When the battery capacity has run out, "E" and "BATT" blink and the unit stops operation automatically.

2-7 Lens (optional)

Refer also to the "OPERATION MANUAL" for the lens.

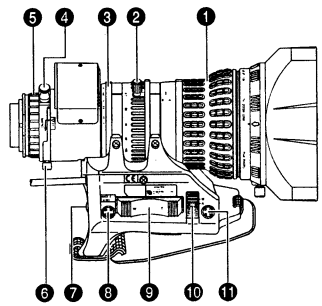

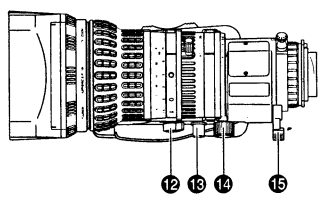

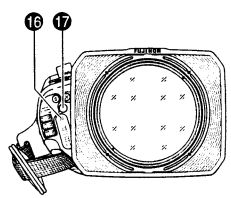

❶ FOCUS ring
Manual focus ring.

❷ ZOOM lever/ring
This is the manual zoom ring equipped with a zoom lever. To activate the zoom feature on, turn the zoom mode knob ⓬ to position "M".

❸ IRIS ring
Manual Iris ring. To activate the auto iris feature, set the Iris Mode switch ⓾ to A.

❹ Macro lever
Pull this lever up to enable the rotation of the macro ring.

❺ Macro focusing ring (for close-up shooting)
By rotating this ring in the direction of the arrow, the lens becomes capable of close-up shooting of very small objects.
Normal focus adjustment and zooming are not available in the macro mode.
To shoot images in the macro mode, set the focus ring to the infinite position and the zoom ring to the widest angle position.
To adjust the focus of the macro image, rotate this ring in the direction of arrow until the object is focused.

Note :
The back-focus knob is located close to the macro ring, be careful not to mistake the back-focus knob for the macro ring. After the required operation, be sure to return the macro ring to the normal position.

❻ BACK FOCUS ring/fixing screw
For Set-up Back Focus adjustment only.
Secure with the Screw knob after adjustment.

❼ [VTR] Trigger button
To start shooting push once.
To stop shooting push again.

❽ [RET] return video button
The return video signal from the VCR section can be monitored on the viewfinder only while pushing this button.
- The Viewfinder Status display is not available during this operation.

❾ ZOOM servo control lever
Pushing this lever in the W direction makes the lens move wider.
Pushing this lever in the T direction makes the lens move tighter.
Pushing harder changes the speed of the Zoom. To operate the servo zoom feature with this lever, set the ZOOM knob ⓬ to S.

❿ IRIS mode switch
A : Activates the auto iris feature.
M : Allows manual iris control.

⓫ Momentary auto iris button
When the IRIS MODE switch ❿ is at M, pushing this button activates the Auto Iris Function while it is held down only.

⓬ ZOOM mode knob
S : Servo Zoom mode. Allows operation by the Zoom Servo Control lever ❾.
M : Manual Zoom mode. Allows zoom control by the Zoom lever/ring ❷.

⓭ REMOTE FOCUS control connector
To connect with an optional focus servo unit.

⓮ ZOOM servo connector
Connect with an optional zoom servo unit.

⓯ Aspect ratio switching lever
Switches the aspect ratio between 4:3 and 16:9.

Note :
Make sure to switch the lever to the correct position.

⓰ Rapid zoom setting switch
Quickly sets the zoom to telescopic mode.
For the setting method, refer to the "OPERATION MANUAL" for the lens.

⓱ IRIS speed adjusting control
Adjusts the iris operation speed.

2-8 1.5-Inch Viewfinder VF-P116W (optional)

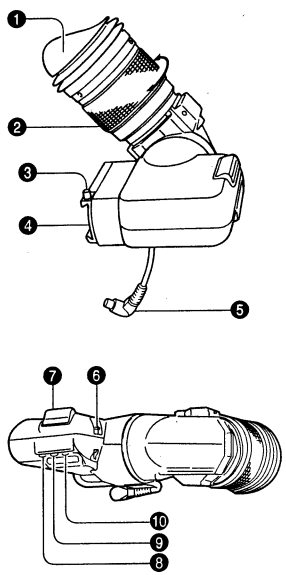

1 Eyepiece
Blocks light to viewfinder screen and holds eye optics.
The Eyepiece can be opened to view the screen directly.

2 Eyepiece focusing ring
Rotate this ring to adjust the viewing angle.
Be sure to adjust this ring because the viewing angle affects the lens focus adjustment.
To perform more reliable focus adjustment, it is recommended to turn on the contour with the PEAKING control 8.

3 Stopper screw
This stopper screw prevents the viewfinder from coming off the camera.

4 Viewfinder shoe
Attaches to the Viewfinder Mount base on camera.

5 Cable
Connect to camera viewfinder connector.

6 Tally switch
Set this switch to off if you do not want to inform the subjects by the Tally light that they are being recorded.
ON : Lights the Tally lamp 7 during recording.
OFF : Does not light the Tally lamp 7 .
However, the REC lamp at the eyepiece will not turn off.

7 Tally light
Lights when recording is in progress.
The light does not come on when the Tally Switch 6 is at "OFF".

8 [PEAKING] peaking (contour) control
Rotate to adjust the contour of the viewfinder screen image.

9 [CONT] contrast
Controls the level of Viewfinder contrast.

10 [BRIGHT] brightness
Controls the level of Viewfinder brightness.

2-9 Viewfinder Display

WARNING INDICATORS INSIDE THE VIEWFINDER

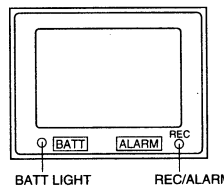

The viewfinder has two LED indicators below the screen. These LEDs light or blink to indicate the present status of the camera or the DY-90W's camera control unit.

- **[BATT] BATTERY LIGHT**
  This blinks red when battery voltage becomes too low for the camera to operate.
  This lights when the battery has run out.
- **REC/ALARM LIGHT**
  This lights green for these conditions.
  Solid Green : While recording.
  Blinks Green : • While the VCR prerolls before recording.
  • If the Tape is finishing.
  • If the VCR Malfunctions

VIEWFINDER SCREEN DISPLAY

The viewfinder screen displays the following information, however, these are not displayed during VCR playback.

- Status screens (screens for use in checking the current camera setup)
- Alarm message display
- Safety zone display
- Setting screen (screen for use in the camera setup including the data)
- Auto white balance display
- Shutter speed display

■ Status Screens

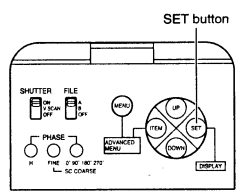

Press the SET button during normal screen to display one of the status screens on the viewfinder. One of the three status screens will be displayed every time the button is pressed.

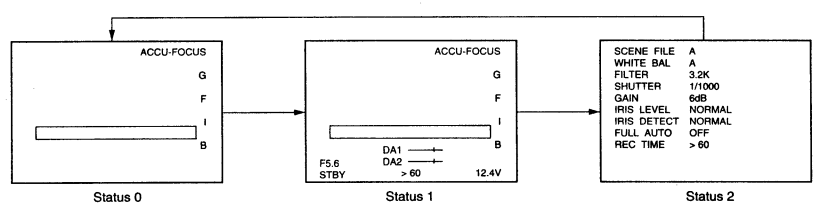

Status 0 Status 1 Status 2

2-9 Viewfinder Display (Cont'd)

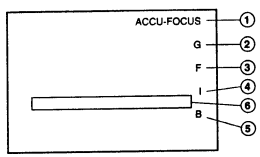

Status 0

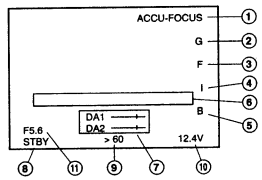

Status 1 (U-ver.)

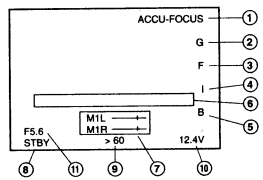

Status 1 (E-ver.)

● **Status 0**

Display Position	Display	Function
①	ACCU-FOCUS	Blinking or displayed during the ACCU-FOCUS operation.
	S	Displayed when the Shutter or V. Scan is ON.
	FAS	Displayed when the Full Auto Shooting is ON.
	ALC	Indicator which appears when the individual ALC is ON.
②	G	Displayed in other modes than 0 dB, LOLUX and ALC.
	L	Displayed during LOLUX operation.
③	F	Displayed when the FAW is ON.
④	I	Displayed when the Auto iris level is set to the back light or spotlight operation.
⑤	B	Displayed during the black stretch or black compression switch operation.
⑥	Event display	See the table below.

SCENE FILE A
WHITE BAL A
FILTER 3.2K
SHUTTER 1/1000
GAIN 6dB
IRIS LEVEL NORMAL
IRIS DETECT NORMAL
FULL AUTO OFF
REC TIME > 60

Status 2

⑥ Event display

Event is displayed for only about 2 seconds on the viewfinder screen when any of the following switches is operated.

Switch	Event Display Contents	
ZEBRA	ZEBRA	ON, OFF
BLACK STRETCH/ BLACK COMPRESS	BLACK	STRETCH, NORMAL, COMPRESS
GAIN	GAIN	–3 dB, 0 dB, 6 dB, 9 dB, 12 dB, 18 dB, ALC
WHT. BAL	WHITE BAL	A, B, PRESET, FAW, 3200 K (An approximate color temperature of is displayed during A or B.)
FULL AUTO	FULL AUTO	ON, OFF
IRIS	IRIS	BACK.L, NORMAL, SPOT.L
LOLUX	LOLUX	ON, OFF
FILTER control	FILTER	3200K, 5600K, 5600K+ND, EFFECT
FILE	SCENE FILE	A, B, OFF
VTR	VTR	STBY, SAVE
AUTO KNEE	AUTO KNEE	ON, OFF

2-9 Viewfinder Display (Cont'd)

● **Status 1**

In addition to the information on the status 0 screen, this screen displays information on the audio indicator, accumulated recording time, voltage and lens F number.

Display position	Display	Function
⑦ (U-ver.)	DA1- - - - + - - DA2- - - - + - - (example)	Shows the audio input channel and input level. Input channel indication is changed depending on the setting of the AUDIO MONITOR switch. Display ON/OFF can be selected by the menu screen. For details on "AUDIO DISPLAY", see page 67.
⑦ (E-ver.)	M1L- - - - + - - M1R- - - - + - - (example)	Shows the audio input channel and input level. Input channel indication is changed depending on the setting of the AUDIO DISPLAY switch. Display ON/OFF can be selected by the menu screen. For details on "AUDIO DISPLAY", see page 67.
⑧	STBY SAVE STOP REC FF REW EJECT	VCR in standby mode VCR in save mode VCR in stop mode VCR in record mode VCR in fast-forward mode VCR in rewind mode VCR in eject mode
⑨	> 60 (Example) 12H 34M 56S 20F	Remaining tape indication (displayed in 1-minute steps) Time code display Time code display is available when the "REC TIME" item on the advanced menu screen is set to TIME CODE. For details on "REC TIME", see page 69.
⑩	12.4 V (example) 50 % (example)	Voltage indication (displayed in 0.1 V steps) When an Anton-Bauer battery is connected and if the remaining battery power is detected, it shows the remaining battery power displayed as a percentage (%) figure. (In this case, the voltage indication is not displayed.)
⑪	OPEN, F2, F2.8, F4, F5.6, F8, F11, F16, CLOSE	Shows the F number of the connected lens. It is not displayed when the lens is removed. Also for some lenses, no display appears. Display ON/OFF can be selected in the menu screen. For details on "F NO DISPLAY", see page 67.

Note:
The input level will not be displayed while "LOW BATTERY" is being displayed.

Note:
The level meter activated immediately after the power is switched ON. This is not a malfunction.

Note:
Sometimes when an extended tape over 104 minutes is used, especially at the beginning of the tape, the tape remaining indication is incorrectly displayed as a value less than it should be.

● **Status 2**

This screen displays the camera setup.
Event display is not available while this screen is displayed.

Display	Display Contents
SCENE FILE	A, B, OFF
WHITE BAL	A, B, PRESET, FAW
FILTER	3200K, 5600K, 5600K+1/16ND, EFFECT
SHUTTER (U-ver.)	OFF, 1/100, 1/250. 1/500, 1/1000, 1/2000, V.SCAN(1/60.1 to 1/2067.0), EEI (in ALC mode)
SHUTTER (E-ver.)	OFF, 1/120, 1/250. 1/500, 1/1000, 1/2000, V.SCAN(1/50.1 to 1/2053.6), EEI (in ALC mode)
GAIN	–3 dB, 0 dB, 6 dB, 9 dB, 12 dB, 18 dB, LOLUX, ALC
IRIS LEVEL	BACK.L, NORMAL, SPOT L
IRIS DETECT	NORMAL, PEAK, AVG
FULL AUTO	ON, OFF
REC TIME	Tape remaining time or time code

2-9 Viewfinder Display (Cont'd)

■ Alarm Message Display

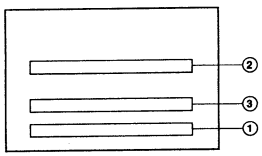

The following alarm messages are displayed on the status 0 and status 1 screens.

Display position	Display	Contents
①	LOW BATTERY	The battery capacity is nearly exhausted.
②	VTR WARNING [HEAD]	Head clog
	VTR WARNING [SERVO]	Servo error
	VTR WARNING [DEW]	Condensation
	VTR WARNING [HARD]	Hardware error
③	TAPE NEAR END	Tape remaining time is less than approx. 3 minutes in the record mode
	TAPE END	Tape end reached
	REC INHIBIT	VTR trigger is pressed with a non-recordable cassette (REC switch on the back of the cassette is set to OFF) loaded
	NO TAPE	VTR trigger is pressed with no tape

2-9 Viewfinder Display (Cont'd)

■ Safety Zone

Three types of safety zone can be displayed in the viewfinder. Select the required one with the SAFETY ZONE item on the main menu screen.

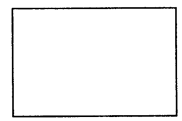

OFF

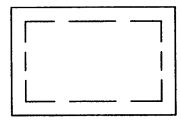

ZONE 1

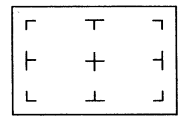

ZONE 2

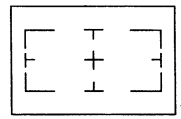

ZONE 3

■ Setting the Screen Display

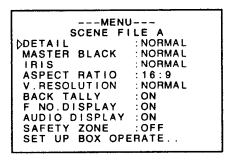

Screen for use in the date setting and other camera setups.
See the flow of MENU screen on page 65.

■ Auto White Balance Display

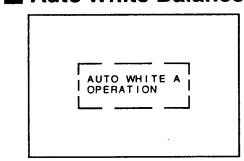

This screen appears during the auto white balance adjustment operation to display various data.
See "White Balance Adjustment" on page 44.

■ Shutter Speed Display

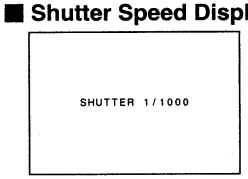

When the SHUTTER is on, a shutter speed is displayed. (for approx. 5 sec.)
Also, whenever the shutter speed is altered by using the UP/DOWN button, the shutter speed is displayed.
While this is displayed, other displays disappear.
See [SHUTTER] on page 14.

3. BASIC SYSTEM CONNECTIONS AND ADJUSTMENTS

3-1 Basic System

• For information on connection with the individual attatchments, refer to the page describing the method for their respective connection.

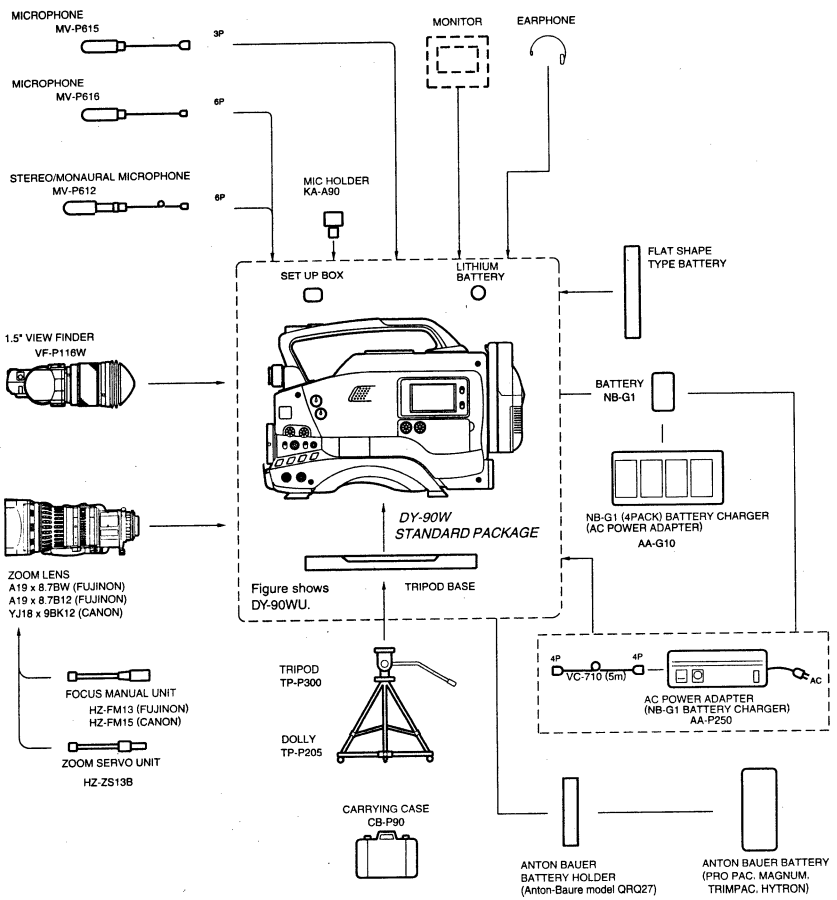

3-2 Attaching the Zoom Lens (optional)

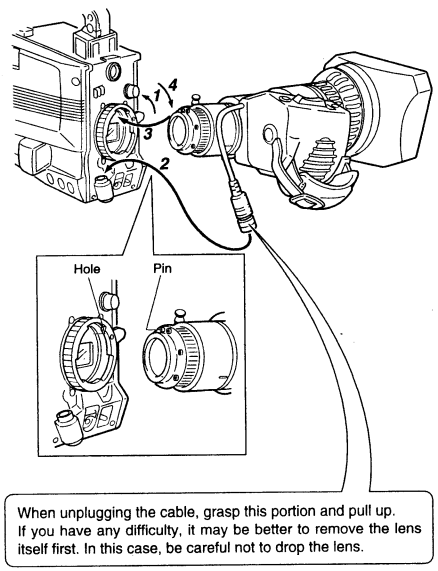

When unplugging the cable, grasp this portion and pull up.
If you have any difficulty, it may be better to remove the lens itself first. In this case, be careful not to drop the lens.

1. Loosen the mount ring.

2. Connect the cable.

3. Attach the lens with its pin aligned with the hole in the mount.

4. Tighten the mount ring.

3-3 Attaching the Viewfinder (optional)

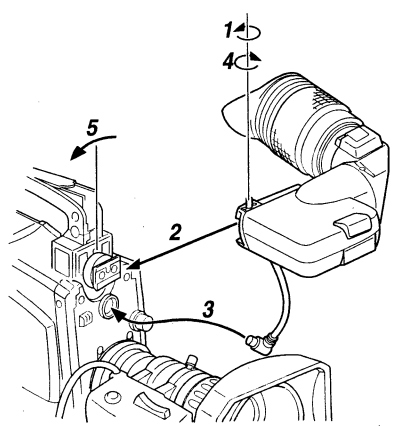

1. Loosen the stopper screw.

2. Attach the viewfinder with its guide aligned with the shoe.

3. Connect the cable connector as shown in the figure on the right.

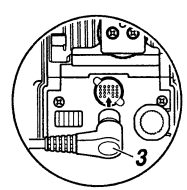

4. Tighten the stopper screw.

5. Tighten the ring.

3-4 Attaching the Tripod Base

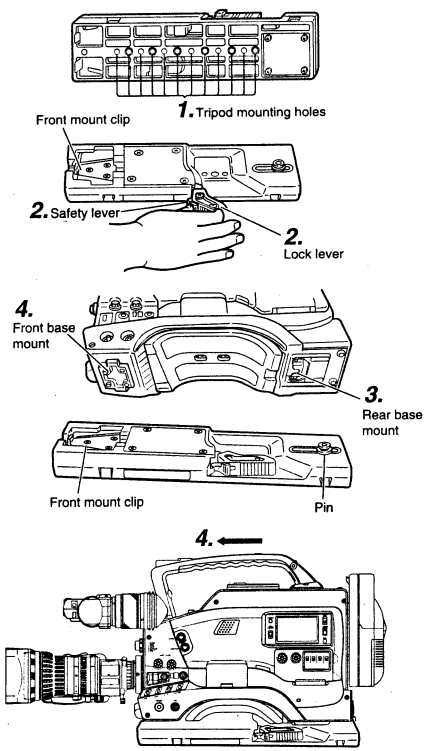

1. Attach the tripod base on the tripod by using the hole which balances the unit most optimally.

2. While pushing the safety lever, pull the lock lever toward the front until the front mount clip clicks into place.

3. Place the unit on the tripod base by aligning the rear base mount of the unit with the pin on the tripod base.

4. Push the unit from the upward direction and slide it toward the front so that the front base mount of the unit is locked by the front mount clip of the tripod base as it clicks into place.

CAUTION :

- The front base mount may be locked while the pin of the tripod base is not inserted into the hole on the rear base mount of the unit. Therefore, after mounting, make sure that these parts are engaged properly.
- When moving the unit which is mounted on a tripod, any impact or vibration should be avoided as this may cause the unit to become detached and to drop from the tripod. Be sure to remove the unit from the tripod before moving it.

3-5 Attaching the Optional Microphone

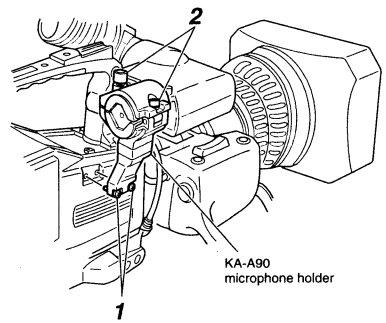

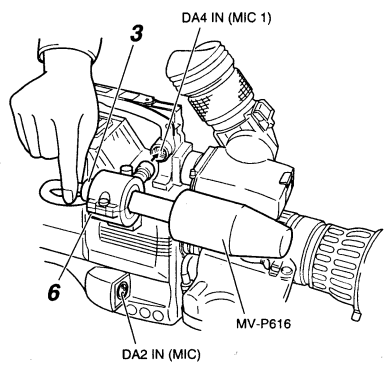

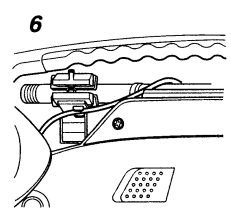

With the optional KA-A90 mic holder, the optional MV-P615/616 (mono) and MV-P612 (stereo/mono), microphones can be used.

* When using the MV-P612 microphone, set the DA4(MIC1) mode switch on the MV-P612 to "mono" (monaural).

1. Secure the mic holder with 2 screws.

2. Turn the small knob located on the outer side of the mic holder anticlockwise to loosen it, and loosen the large knob located on the inner side in the same way.
Rotate the large knob fully anticlockwise to open the holder.

3. Attach the microphone to the mic holder so that the microphone does not interfere with the cassette holder. With a stereo microphone, make sure that the left/right-sides are correct.

4. Set the mic holder so that the height is level, and tighten the inside and outside knobs to secure the microphone.

5. Connect the microphone cable to the mic input connector.

- When the MV-P616/MV-P612 is used, connect the microphone's 6-pin connector to the DA4 input connector of this unit.
- When the MV-P615 is used, connect the microphone's XLR 3-pin connector to the DA2 input connector of this unit. (Use only phantom microphone)
  When the microphone is connected to DA1 or DA3 input connector on the rear panel, set the MIC +48 V ON switch according to the microphone used.

6. Secure the microphone cable using the cable clamp located on the side of the mic holder.

Note:

- When the light mounted on the camera is used at the same time, if the microphone in use has a long sound collecting section (ultra-directional type, etc.), the microphone's shadow may influence the image.
- When using a KA-A70 mic holder, noise may interfere with the audio signal. In this case, use a KA-A90 mic holder instead.
- When using the MV-P612 in the stereo mode, or the broad-directional microphone, noise of this unit may be picked up.

3-6 How to Replace Backup Lithium Batteries

This unit uses a lithium battery to backup the time code and date/time data.
Install the provided lithium battery before actually using the unit. (Lithium battery : CR2032)

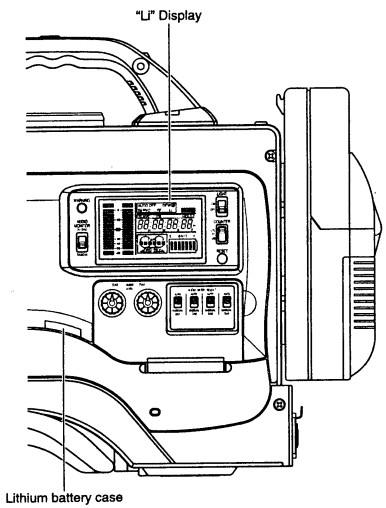

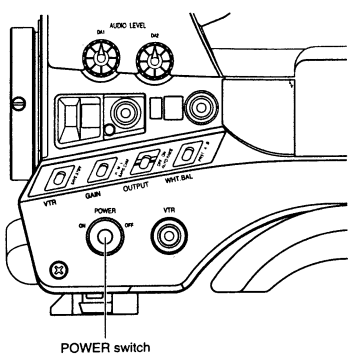

CAUTION

If the unit is not used for a lengthy period of time, remove the lithium battery. If the voltage of the lithium battery is low, the set may malfunction.

When the lithium battery is not in place or the battery is running down and requires a replacement, the "Li" in the LCD display will light up.

- Replace lithium batteries with the POWER switch set to ON. Doing it with the POWER switch set to OFF will cause the loss of backup data.

How to Install the Lithium Battery

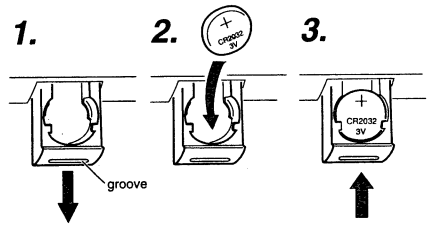

1. Place a flat-blade screwdriver in the groove of the lithium battery case and lower it.

2. Slide the battery into place with its + marked surface facing upward.

3. Push the lithium battery case back into the unit.

How to Remove Lithium Batteries

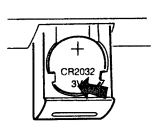

■ If you press the lithium battery at the shown place, it will easily be removed.

4. POWER SUPPLY

This unit is operable with the AC power supply or battery pack.

4-1 AC Operation

Note:
Do not remove or connect the DC cable while recording is being performed.

Use the JVC AA-G10 battery charger (max. rated output 4 A, 12 V DC) or AA-P250 battery charger (max. rated output 3.5A, 12.5 V DC) as the AC power supply.

- Do not use any power source with large fluctuations in the power source voltage as with ripples or other noise.

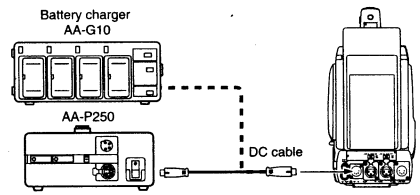

1. After making sure that the power switches of the DY-90W and of the AA-G10 or AA-P250 are set to OFF, connect the DC cable from the AA-G10 or AA-P250 to the DC INPUT connector of the DY-90W as shown in the illustration.

2.
- When the AA-P250 is used, set the CHARGE/CAMERA switch of the AA-P250 to CAMERA.
- When the AA-G10 is used, press the VTR button of the AA-G10.

3. Press the POWER switch of the unit to ON.
Now power is supplied to the unit.
- For details, read the instruction manual of the AA-G10 or AA-P250.

4-2 Battery Pack Operation [for U-ver.]

This unit can be operated with the following battery packs.

■JVC battery pack : NB-G1

■Flat shape type battery pack

■Anton-Bauer battery pack
- Propack 13/14 Series
- Trimpack 13/14 Series
- Magnum 13/14 Series
- Compack 13/14 Series

- An Anton-Bauer battery pack cannot be attached to this unit directly.
  An additional battery holder is required.
- Battery holder: Anton-Bauer model QRQ27
  See page 37 for the battery holder attaching method.

- When the DC cable is connected to the DC INPUT connector, the power supply from the battery pack is interrupted and the power starts to be supplied through the DC INPUT connector.
- The connection and disconnection of the DC cable should be performed quickly and correctly when operating with a battery pack.
  The following symptoms may occur when connecting and disconnecting the DC cable too slowly when operating with a battery pack.
  - The power is cut off for a moment when the DC cable is disconnected.
  - Noise to the video and audio signals occurs. Audio signal becomes mute.
- When operation is carried out with a new battery DC input after the previously battery capacity has run out, switch OFF the power once then switch ON after the DC voltage is applied.

4-2 Battery Pack Operation [for E-ver.]

This unit can be operated with the following battery packs.

■Anton-Bauer battery pack ..... Directly connect to the battery holder.
- Propack 13/14 Series
- Trimpack 13/14 Series
- Magnum 13/14 Series
- Compack 13/14 Series

■JVC battery pack : NB-G1

■Flat shape type battery pack

When the NB-G1 or a flat type battery pack is used, the optional battery case BH-P27 must be mounted to this unit.
For details see page 36.

- When the DC cable is connected to the DC INPUT connector, the power supply from the battery pack is interrupted and the power starts to be supplied through the DC INPUT connector.
- The connection and disconnection of the DC cable should be performed quickly and correctly when operating with a battery pack.
  The following symptoms may occur when connecting and disconnecting the DC cable too slowly when operating with a battery pack.
  - The power is cut off for a moment when the DC cable is disconnected.
  - Noise to the video and audio signals occurs. Audio signal becomes mute.
- When operation is carried out with a new battery DC input after the previously battery capacity has run out, switch OFF the power once then switch ON after the DC voltage is applied.

4-2 Battery Pack Operation (Cont'd)

USING JVC'S NB-G1 OR FLAT SHAPE TYPE BATTERY PACK

Attaching the NB-G1 Battery Pack

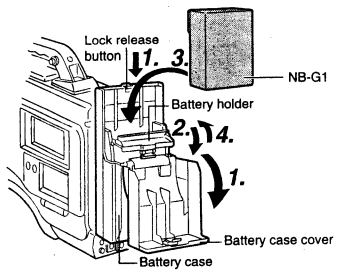

1. Open the battery case cover while pushing the lock release button.
2. Tilt the battery holder in the arrow-indicated direction.
3. Insert the battery pack into the battery case with its electrodes facing the unit.
4. Close the battery holder in the arrow-indicated direction and close the battery case cover.

Note:
Switch the power to OFF when replacing the battery pack.

Attaching a Flat Shape Type Battery Pack

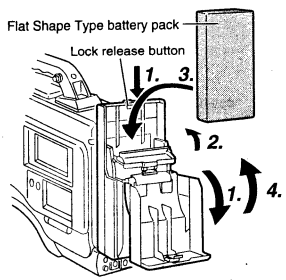

1. Open the battery case cover while pushing the lock release button.
2. Tilt the battery holder in the arrow-indicated direction.
3. Insert the battery pack into the battery case with its electrodes facing the unit.
4. Close the battery case cover.

4-2 Battery Pack Operation (Cont'd)

ATTACHING AN ANTON-BAUER BATTERY PACK

When an Anton-Bauer battery pack (Propack 13/14, Magnum 13/14, Compack 13/14 Series) is used, it is required to remove the battery case from this unit and attach the Anton-Bauer battery holder in place. Use the battery holder model described below.

- Battery holder : Anton-Bauer model QRQ27

Removing the Battery case from this unit and Attaching Anton-Bauer Battery Holder In Place

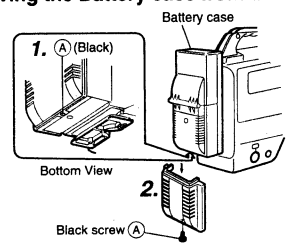

1. Remove the black screw Ⓐ from the bottom of the battery case.
2. Remove the lower half of the battery case cover in the downward direction.

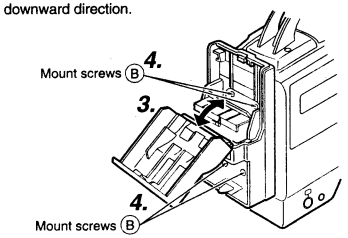

3. Open the battery cover and battery holder.
4. Remove the 4 mount screws Ⓑ, disconnect the connectors between this unit and the battery cover, and separate the battery case from this unit.

Attaching the Anton-Bauer battery holder

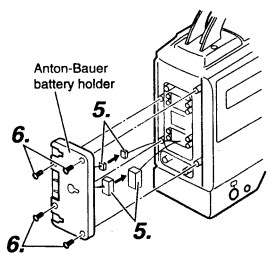

5. Connect the connectors from this unit and those of the battery holder (connect 2 pairs of connectors including the large and small ones).
6. Secure the battery holder onto this unit using the 4 mount screws supplied with the battery holder.

- Be careful not to pinch the connector wires; otherwise a malfunction may result.

USING AN ANTON-BAUER BATTERY PACK

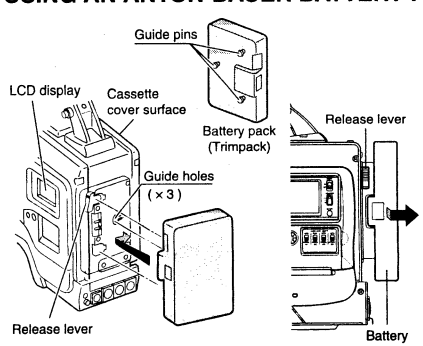

Attaching the Battery Pack

1. Align the 3 guide pins of the battery pack with the guide holes on the battery holder, and push straight to insert the battery pack. The battery cannot be attached properly if the guide pins are not inserted straight.
2. Slide the battery pack toward the side panel where the cassette cover is located until it clicks.
   → Now the battery pack has been attached.

Detaching the Battery Pack

■While pushing and holding the release lever, slide the battery pack toward the side panel where the LCD display is located, then pull the battery pack outward to remove.

4-2 Battery Pack Operation (Cont'd)

REMAINING BATTERY POWER DISPLAY

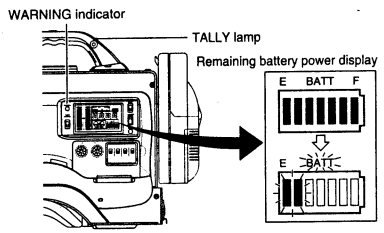

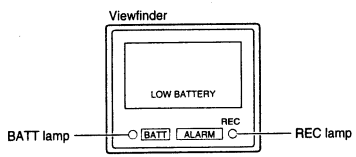

When an Anton-Bauer intelligent battery pack is used, the input voltage indicator section in the Status 1 mode of the viewfinder displays the remaining battery power in percentage (%) figures.

• To display the remaining battery power accurately, set the Setup Menu item "BATT. TYPE SELECT" according to the type of the battery pack in use. For details see page 64.

The status of the remaining battery power can be checked by the remaining battery power display. For details, see page 64.

■When the remaining battery power is nearly exhausted, the following warning message will appear. In this case, replace it with a fully-charged battery as soon as possible.

- Remaining battery power display :
  Segment bar and BATT indicator starts to blink
- WARNING indicator and TALLY lamp blink
- Viewfinder :
  BATT lamp blinks
  "LOW BATTERY" character indication (Status 0 or Status 1 mode)
- REC lamp blinks (during REC only)
- Alarm sound beeps

After the remaining battery power warning appears, if the battery power operation is still continued, this unit automatically stops operation.

Operating Time with Battery Pack

When the VF-P116W is used as the viewfinder and a fully charged battery pack is attached, the continuous operating time is as follows:

Battery Pack	Continuous Operating Time (at 25 °C)
NB-G1	30 Minutes
NP-1B	30 Minutes
Magnum 14	70 Minutes

- Battery operating time may differ depending on the number of charging times of the battery, charging conditions and the operating environment, etc. Use the values in the table on the left for approximate reference times.
- Operating time is reduced in areas with a cold environment.
- Operating time is reduced when the powered zoom lens is used frequently.

PRECAUTIONS FOR THE BATTERY PACK

- When the battery pack is not in use, it must be stored in a cool, dry place.
  Do not leave the battery pack in a place where it might be subject to a high temperature (under direct sunlight in a car, etc.), this could cause leakage of the fluid or shorten service life.
- When the terminal section of the battery pack gets dirty, the operating time will be shortened.
- If the operating time becomes greatly reduced even immediately after recharging, the battery pack has nearly finished its service life. Purchase a new battery pack.

Recharging

- Recharge the battery pack after completely discharging. If recharging is repeated with incomplete discharging, this could cause lowering of the battery capacity.
- If the battery capacity is lowered by repeating incomplete recharging and discharging, once discharge the battery pack completely , then recharge it to regain the battery capacity.
- If the battery pack is recharged with its internal temperature raised immediately after use, recharging may not be performed completely.

5. PREPARATIONS

5-1 Turning the Power ON

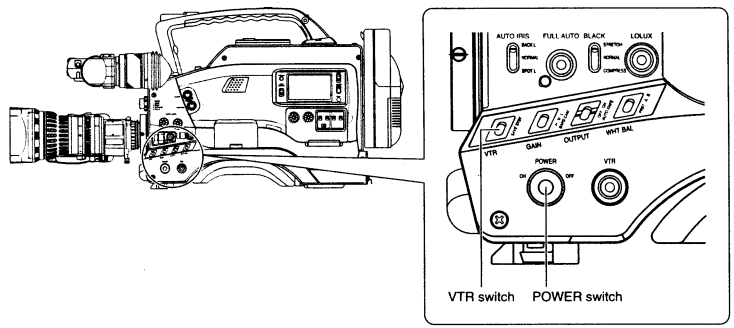

1. Turn the POWER switch to ON.
→The power is then supplied to the unit.
- Video image is output to the viewfinder.
- The display of the VCR section is turned on.

2. Select the DY-90W operation mode with the VTR switch.
- The DY-90W operation mode may differ when the power is turned ON or when the cassette is loaded depending on the setting of the VTR switch as follows:

VTR switch setting	DY-90W operation mode
SAVE	DY-90W enters the SAVE mode (tape protect mode) and stops the drum motor. "SAVE" is displayed in the VCR operation display section in the Status 1 mode of the viewfinder. In this mode, the tape is effectively protected. In this condition, press the VTR trigger button to start recording. However, the time required for this operation takes more than for that of the STBY mode.
STBY	When a recordable cassette tape is loaded, the DY-90W enters the record-pause mode automatically. (the Drum motor is still rotating.) "STBY" is displayed on the Status 1 screen on the viewfinder. In this condition, pressing the VTR trigger button immediately starts recording.

5-2 Cassette Loading and Unloading

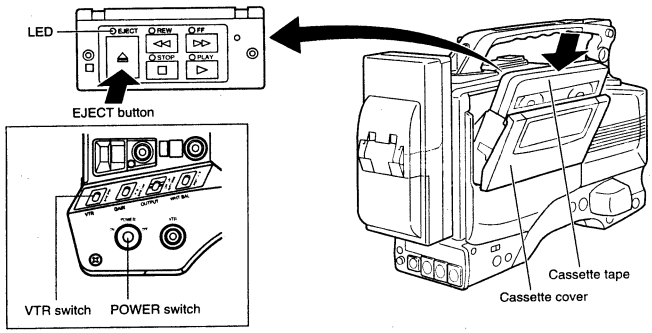

- A cassette cannot be loaded in or unloaded from the unit while it is in POWER OFF mode.
- Use a video cassette tape marked DIGITAL S.
- A S-VHS or VHS video cassette tape cannot be used with this unit. If you insert a S-VHS or VHS cassette in the unit, it will be ejected automatically

Loading the Cassette

1. Turn the POWER switch to ON.

2. Press the EJECT button to open the cassette cover.
The LED indicator above the EJECT button lights and the cassette cover opens.

3. Insert a cassette tape after removing the tape slack.

4. Slowly close the cassette cover by pushing it in all the way.
The tape is loaded automatically when the cassette cover is closed.

The cassette indicator on the display blinks during tape loading and lights steadily after the loading has been completed.

- The condition at the completion of loading is variable depending on the VTR switch and the REC switch on the back side of the cassette tape as shown below.

VTR switch	REC switch of Cassette Tape	
	ON	OFF
VTR STBY	Enters record-pause mode after back-spacing.	The unit enters stop mode.
SAVE	In the record-pause mode the drum rotation is stopped.	

- After the cassette cover is closed, it takes about 8 seconds before the unit can start recording or enter the stop mode.

CAUTION

When closing the cassette cover, be sure to push it in all the way. When the cassette cover is not closed completely, it is left in a half-locked state, in which the VCR section accepts no operation. In this case, push the cover again all the way to get it locked firmly. When the cassette is in place and the cassette cover is only half-locked, the cassette indicator in the LCD display will not appear. When the cassette cover is properly locked, the indicator is displayed.

Unloading the Cassette

1. Turn the POWER switch to ON.

2. Press the EJECT button.
→ The LED indicator above the EJECT button lights and tape ejection starts.

The cassette indicator on the display blinks during tape ejection and turns off after the ejection has been completed.

- It takes a few seconds before the cassette cover opens after the EJECT button is pressed.
- The cassette tape cannot be ejected during recording. Allow the unit to enter the record-pause mode first before pressing the EJECT button.

3. Take out the cassette tape.

4. Close the cassette cover.

CAUTION

Do not leave the unit for a long period with the cassette cover open.
Otherwise dirt or other foreign objects may enter the VCR section, and cause malfunction.

6. SETTING AND ADJUSTMENTS BEFORE SHOOTING

6-1 Camera Control Settings for Adjustment

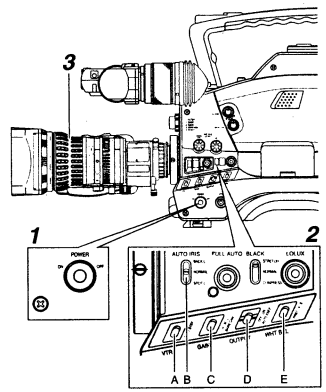

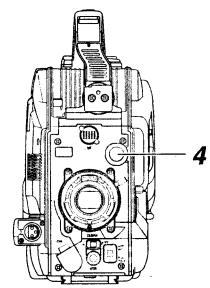

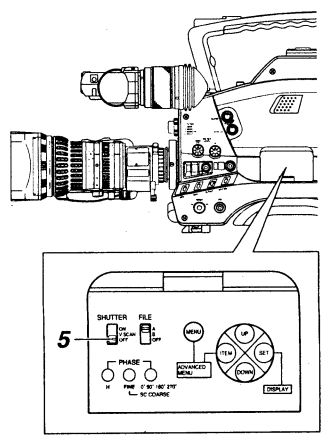

1. **POWER ON**

1. First place a charged battery in the battery holder or connect DC power to the DC input.
2. Turn the AC power adapter on.
3. Set the POWER switch on the unit to ON.

2. **Side SWITCH positions**

A. Turn the VTR switch to the SAVE.
B. AUTO IRIS switch; set to NORMAL.
C. GAIN switch; set to L. The L position is always 0 dB.
D. OUTPUT (CAM/BARS) switch; set to CAM•AUTO KNEE OFF.
E. WHT. BAL (Auto White Balance) switch; set to A or B.

3. **AUTO IRIS ON**

Initially set the lens iris to Automatic. (A mode)
Later take advantage of the Momentary Iris control to activate the camera's exposure system when needed.

4. **FILTER turret**

Choose the proper Filter selection for the lighting conditions.

FILTER		Suitable Location
1	3200K	Indoor, dark outdoors
2	5600K	Outdoors
3	5600K+ND	Outdoor under fine weather
4	EFFECT	The cross effect filter makes the highlight sections shine like crosses and reduces the contrast. The corresponding color temperature is 3200K.

5. **SHUTTER positions**

Set to OFF position (1/60: U-ver., 1/50: E-ver.).

6-2 Viewfinder Adjustment

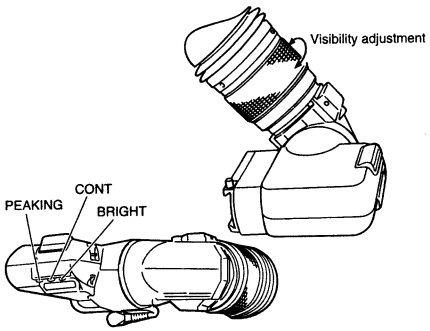

■ Visibility adjustment

Rotate the eyepiece focusing ring so that the viewfinder screen image is clearly visible.

■ Brightness and contrast adjustment

When the ambient brightness changes, the brightness and contrast of the viewfinder screen can be adjusted with the CONT and BRIGHT controls.

■ Peaking adjustment

Turning the PEAKING (contour adjustment) control makes the picture look sharper, making focus adjustment easier.

6-3 External Monitor Adjustment [U-ver.]

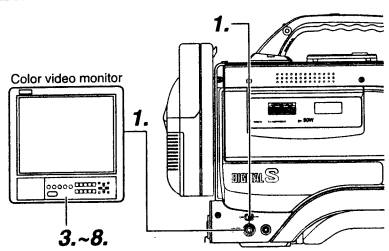

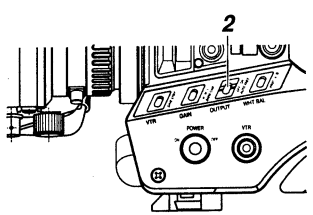

Display the color bar signal built in the camera head and adjust the colors, contrast and brightness.

1. Connect a color video monitor to the MONITOR OUTPUT connector of the camera head. Set the switch to the CAM side of the [CAM/VTR] switch of this unit.

2. Set the OUTPUT switch to BARS to output the color bar signal (SMPTE type color bars).

3. Set the monitor so that the screen turns entirely blue.

4. Adjust the chroma control of the monitor so that there is no difference in brightness between ① and ⑧ or between ⑦ and ⑭ of the color bars.

5. Adjust the phase control of the monitor so that there is no difference in brightness between ③ and ⑩ or between ⑤ and ⑫ of the color bars.

6. If the phase control adjustment above causes a difference in brightness between ① and ⑧ or between ⑦ and ⑭, restart from the chroma control adjustment in step *4*.

7. Switch the monitor back to the standard screen (All of R, G and B will appear).

8. Adjust the brightness by using the Brightness Adjusting control so that the color bar ⑱ and ⑲ disappear, and color bar ⑳ becomes visible.

■ SMPTE type color bars

White ①	Yellow ②	Cyan ③	Green ④	Magenta ⑤	Red ⑥	Blue ⑦
Blue ⑧	Black ⑨	Magenta ⑩	Black ⑪	Cyan ⑫	Black ⑬	White ⑭
Blue ⑮	Blue ⑯	Blue ⑰			⑱ ⑲ ⑳	Blue ㉑

The color bar screen has a configuration as shown above.
The description hereinafter refers to the positions in the color bar screen using the numbers.

6-2 Viewfinder Adjustment

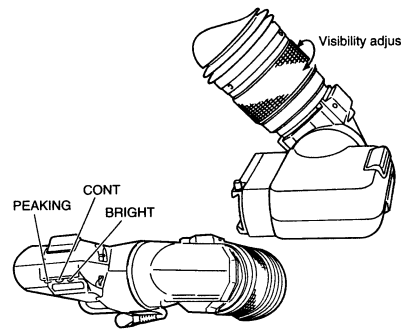

■ Visibility adjustment

Rotate the eyepiece focusing ring so that the viewfinder screen image is clearly visible.

■ Brightness and contrast adjustment

When the ambient brightness changes, the brightness and contrast of the viewfinder screen can be adjusted with the CONT and BRIGHT controls.

■ Peaking adjustment

Turning the PEAKING (contour adjustment) control makes the picture look sharper, making focus adjustment easier.

6-3 External Monitor Adjustment [E-ver.]

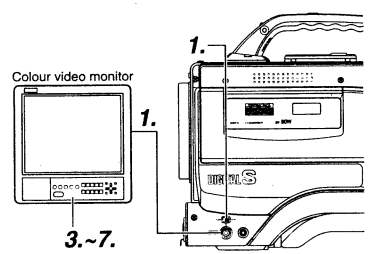

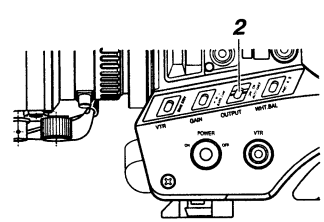

Display the colour bar signal built in the camera head and adjust the colours, contrast and brightness.

1. Connect a colour video monitor to the MONITOR OUTPUT connector of the camera head. Set the switch to the CAM side of the [CAM/VTR] switch of this unit.

> **Note :**
> Make sure that the monitor is terminated with 75 Ω before connecting the MONITOR OUTPUT connector. If it is not terminated with 75 Ω the video signal will not output when the power is on because of the power saving features equipped with this unit.

2. Set the OUTPUT switch to COLOUR BARS to output the colour bar signal (EBU type colour bars).

3. Set the monitor so that the screen turns entirely blue.

4. Adjust the chroma control of the monitor so that there is no difference in brightness between ① and ⑦ of the colour bars.

5. Adjust the phase control of the monitor so that there is no difference in brightness between ③ and ⑤ of the colour bars.

6. If the phase control adjustment above causes a difference in brightness between ① and ⑦, restart from the chroma control adjustment in step *4*.

7. Switch the monitor back to the standard screen (All of R, G and B will appear).

■ EBU type colour bars

White ①	Yellow ②	Cyan ③	Green ④	Magenta ⑤	Red ⑥	Blue ⑦	Black ⑧

The colour bar screen has a configuration as shown above.
The description hereinafter refers to the positions in the colour bar screen using the numbers.

6-4 Back Focus Adjustment

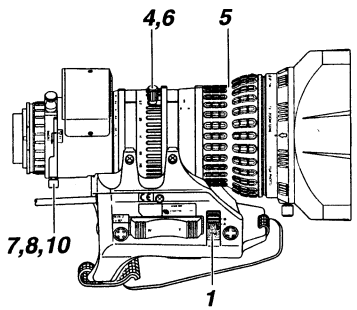

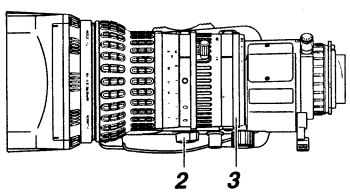

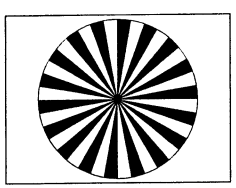

It is only necessary to perform this when focusing is not correct in both the Telephoto and Wide-angle positions, such as when the lens is attached for the first time.
Adjust the viewfinder for sharpness first.
It is easier to adjust back focus when the subject is more than 3 meters from the camera.

1. Set the Iris mode to M (Manual).
2. Set the Zoom mode to MANU (Manual).
3. Open the Iris ring to F1.4. If the illumination is too strong, reduce it or move to a darker place.
4. Turn the zoom lever until the lens is completely telephoto.
5. Focus on the subject. There is a specific chart that looks like a dart board which is helpful.
6. Set the lens to completely Wide-angle.
7. Loosen the back focus ring retaining knob.
8. Adjust the back focus ring for the best possible focus.
9. Repeat steps 4 through 8 for fine adjustment.
10. Tighten the back focus ring retaining knob to secure the ring.

6-5 White Balance Adjustment

Since the color of light (color temperature) is variable depending on the light source, it is required to re-adjust the white balance when the main light source illuminating the object changes.

Note
- Do not place any objects such as metal one, etc. that can produce a strong reflected light as this may cause an improper white balance adjustment.
- When an object lit by a halogen lamp of which the color temperature is 3,200K is shot while using a the color temperature conversion filter set to 5,600K, a proper white balance adjustment and (FAW) Full Time Auto White balance cannot be carried out. In this case, change the setting of the color temperature conversion filter to 3,200K then carry out the white balance adjustment and (FAW) again.

WHITE BALANCE ADJUSTMENT

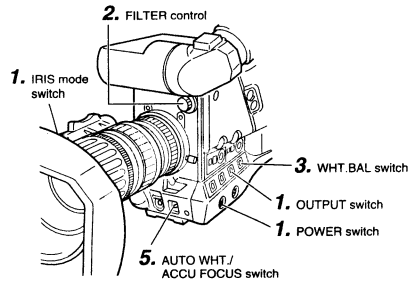

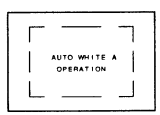

During operation

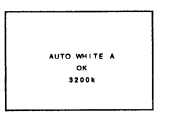

Example of the result message

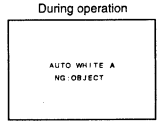

NG : OBJECT

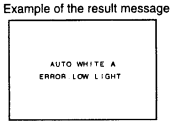

ERROR : LOW LIGHT

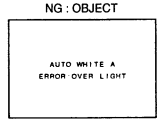

ERROR : OVER LIGHT

Two kinds of white balance adjustment results can be stored in memories A and B.

■ Adjustment procedure

1. Set the following switches.
   - Set the POWER switch to ON.
   - Set the OUTPUT switch to CAM-AUTO KNEE OFF.
   - Set the IRIS mode switch of the lens to A (Auto).
2. Set the FILTER control according to the current lighting.
3. Set the WHT.BAL switch to A or B.
4. Place a white object near the center of the screen under the same lighting conditions as the target object and zoom in to fill the screen with white.
5. Tilt the AUTO WHT./ACCU FOCUS switch upward (to AUTO WHITE) once and release it.
   - "AUTO WHITE A, B OPERATION" is displayed on the viewfinder screen during the operation of the auto white balance adjustment circuit.
   - "AUTO WHITE A, B OK" and color temperature is displayed when the white balance has been adjusted properly.

[Error messages]
- NG : OBJECT
  Displayed when there is not enough white color on an object or the color temperature is not suitable.
- ERROR : LOW LIGHT
  Displayed when the light is low. Increase the lighting illumination then re-adjust the white balance.
- ERROR : OVER LIGHT
  Displayed when the light is excessively bright. Decrease the lighting illumination then re-adjust the white balance.

Note
The color temperature that is displayed after executing the auto white adjustment is only approximate and this may be quite different from the actual color temperature. This is because the color temperature varies depending on the light source and the object, especially with a fluorescent lamp, in which case the light source is not radiant heat. The spectral characteristics will be different, therefore the color temperature display will be different.

FULL-TIME AUTO WHITE BALANCE (FAW)

The FAW function adjusts the white balance value automatically as the lighting condition changes.
This mode is convenient when you have no time to adjust the white balance or when the camera is moved frequently in and out of places under different lighting conditions.

■ Setting procedure

The FAW function can be activated with item "FAW" on the ADVANCED MENU. This item allows setting of the FAW function to one of the white balance switches, A, B or PRESET. Select "NONE" if the FAW function is not required. See page 69.

CAUTION :
- The FAW (Full-time Auto White balance) function cannot provide optimum white balance with an object outside the FAW adjustment range, for example when it contains only a single color or not enough white color.
- The accuracy of the FAW (Full-time Auto White balance) is inferior to that of the manual white balance.
- When the power is switched ON in the FAW mode, it will take approximately 10 seconds for the FAW to complete automatic adjustment.
  Do not perform any recording during these few seconds.

6-6 Switch Settings of the VCR Section [U-ver.]

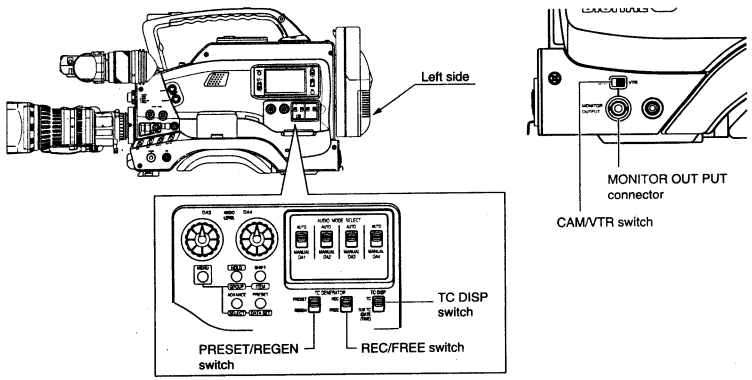

■ **PCM Audio recording channel**
The DY-90W records 4 channels of audio signals to the PCM audio channels.
According to the audio input connectors (DA1 - DA4 IN), it records to each PCM audio channel (DA1 - DA4). See page 46.

■ **Audio input signal selection**
Select with the [LINE/MIC] switch for the audio input when recording the audio signal of the [DA1 IN] or [DA3 IN] connectors on the rear panel. See page 46.

■ **Recording level adjustment selection**
Select the recording level adjustment "AUTO" or "MANUAL" for each audio input connector separately. (See page 47.)

■ **Video output signal selection**
Select the video signals from the viewfinder and monitor connector with the [CAM/VTR] switch.
CAM : Regardless of which mode, the EE image from the camera video signal is output.
Set to this position to shoot the image for back up use with the VCR connecting to the MONITOR OUTPUT connector.
VTR : The playback picture is output during the playback mode.
The EE image from the camera is output during other modes except PLAY mode. Set it to this position for ordinary use.

■ **VCR setup menu setting**
- AUDIO LOW CUT SELECT (DA1 TO DA4)
Select whether the lower frequency components of the audio signal is attenuated or not for each audio input signal.
Set to "ON" when eliminating the wind noise of the microphone.
- LONG PAUSE TIME SELECT
Select the time (in minutes) until the DY-90W enters the tape protection mode (drum rotation stops) when the record-pause mode is continued for long time.
- BACK SPACE MODE SELECT
Select an image to be viewed in the viewfinder or monitor during backspacing in the Record-pause mode. (Effective only when the [CAM/VTR] switch is set to "VTR".)

For details of setup menu, see page 64.

■ **Setting the time code recording function**
The unit records SMPTE-standard time code during recording. Set the switches in the TC GENERATOR block according to applications.
- To record a time code as set in the built-in time code generator:
  - Set the PRESET/REGEN switch to PRESET.
  - Set the REC/FREE switch.
    If it is required to record continual time codes across different scenes, set the switch to REC.
  - Set the VCR setup menu.
    Open the setup item "TCG SELECT DROP/NON-DROP" and set the framing mode of the time code generator to drop frame or non-drop frame mode.
- To record a time code in continuation from the existing time code on tape:
  - Set the PRESET/REGEN switch to REGEN.
- When recording the time code slave-locked to the external time code generator.
  - Set the PRESET/REGEN switch to PRESET.
  - Set the REC/FREE switch to FREE.
  - Setting the "U-BIT SLAVE ON/OFF" switch in the setup menu mode: Set to ON when the user's bit is also slave-locked at the same time.

The time taken to enter record mode from record-pause mode is variable depending on the PRESET/REGEN switch position.
When set to PRESET : Approx. 0.8 second
When set to REGEN : Approx. 1.5 second
This switching will causes a shift in the tape position for the REC PAUSE. Therefore, the unit generates a switching sound.
When the PRESET/REGEN switch is switched after having started recording by pressing the VTR trigger button of the camera, the new setting remains valid in subsequent recording operations.

For details on the time code operations including time code presetting, see "TIME CODE OPERATION" on page 55.

■ **The sub-time code is used to record the date and time data.**
For the setting of the date and time data, see page 61.

6-6 Switch Settings of the VCR Section [E-ver.]

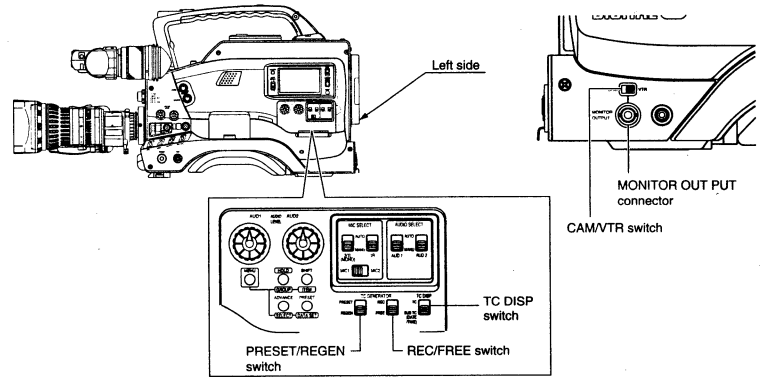

■ **Audio input signal selection**
Select the audio signal for the microphone connector on the front panel or the AUDIO INPUT connector on the rear panel with the AUDIO SELECT switches. (See : page 45.)

■ **PCM audio channel distribution for audio input signal**
Confirm the channel distribution of the audio input signal onto the four PCM audio channels (DA1 - DA4). (See page 46.)

■ **Recording level adjustment selection**
Select the recording level adjustment "AUTO" or "MANUAL" for each audio input connector separately. (See page 47.)

■ **Video output signal selection**
Select the video signals from the viewfinder and monitor connector with the [CAM/VTR] switch.
CAM : Regardless of which mode, the EE image from the camera video signal is output.
Set to this position to shoot the image for back up use with the VCR connecting to the MONITOR OUTPUT connector.
VTR : The playback picture is output during the playback mode.
The EE image from the camera is output during other modes except PLAY mode. Set it to this position for ordinary use.

■ **VCR setup menu setting**
- AUDIO LOW CUT FRONT/AUDIO LOW CUT REAR
Select whether the lower frequency components of the audio signal is attenuated or not for each audio input signal.
Set to this position when eliminating the wind noise of the microphone.
- LONG PAUSE TIME SELECT
Select the time (in minutes) until the DY-90W enters the tape protection mode (drum rotation stops) when the record-pause mode is continued for long time.
- BACK SPACE MODE SELECT
Select an image to be viewed in the viewfinder or monitor during backspacing in the Record-pause mode. (Effective only when the [CAM/VTR] switch is set to "VTR".)

For details of setup menu, see page 64.

■ **Setting the time code recording function**
The unit records EBU-standard time code during recording. Set the switches in the TC GENERATOR block according to applications.
- To record a time code as set in the built-in time code generator:
  - Set the PRESET/REGEN switch to PRESET.
  - Set the REC/FREE switch.
    If it is required to record continual time codes across different scenes, set the switch to REC.
- To record a time code in continuation from the existing time code on tape:
  - Set the PRESET/REGEN switch to REGEN.

- When recording the time code slave-locked to the external time code generator.
  - Set the PRESET/REGEN switch to PRESET.
  - Set the REC/FREE switch to FREE.
  - Setting the "U-BIT SLAVE ON/OFF" switch in the setup menu mode: Set to ON when the user's bit is also slave-locked at the same time.

The time taken to enter record mode from record-pause mode is variable depending on the PRESET/REGEN switch position.
When set to PRESET : Approx. 0.8 second
When set to REGEN : Approx. 1.5 second
This switching will causes a shift in the tape position for the REC PAUSE. Therefore, the unit generates a switching sound.
When the PRESET/REGEN switch is switched after having started recording by pressing the VTR trigger button of the camera, the new setting remains valid in subsequent recording operations.

For details on the time code operations including time code presetting, see "TIME CODE OPERATION" on page 55.

■ **The sub-time code is used to record the date and time data.**
For the setting of the date and time data, see page 61.

6-7 PCM audio recording channels for audio input signals [U-ver.]

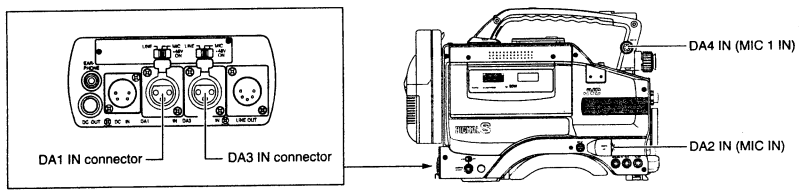

The DY-90W is equipped with 4 audio input connectors (DA1 IN - DA4 IN) to record 4 channels of audio signals.
As shown in the list below, the signals from each of the audio input connectors (DA1 IN - DA4 IN) are respectively recorded on each of the PCM audio channels (DA1 - DA4) of the tape.

PCM Audio Recording Channel			
DA1	DA2	DA3	DA4
DA1 IN Connector	DA2 IN (MIC IN) Connector	DA3 IN Connector	DA4 IN (MIC 1 IN) Connector

- The sound on the DA1/DA2 or DA3/DA4 channels is output during playback.(can be selected with the AUDIO MONITOR switch)
- The audio signals of the DA1 IN and DA2 IN connectors are only recorded on the linear track of the tape for audio search.

Note :

When the tape is in playback with the BR-D80U, BR-D40U or BR-D750U series, etc. which are not compatible with 4-channel audio signal output, the sound of the DA1 and DA2 channels only are output.

6-8 Audio Input Signal Selection [U-ver.]

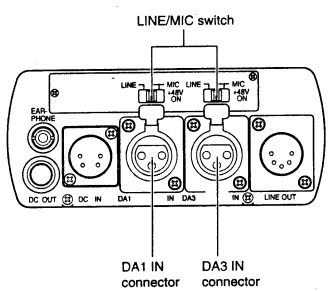

■ Selection of Rear Audio Input Connectors

Select the audio signal input to the AUDIO INPUT connector using the LINE/MIC switch. Set for DA1 IN and DA3 IN connectors separately.

LINE : Set to this position when connected to audio equipment, etc.
The reference input level is +4 dBs.

MIC : Set to this position when using the monaural microphone.
The reference input level is -60 dBs.

MIC +48 V : Set to this position when a microphone requiring +48 V DC power supply is connected. (Such as JVC MV-P615.)

■ DA4 (MIC 1) IN Connector

Connect a monaural microphone to the DA4 (MIC 1) IN connector.
When a stereo microphone is connected, the sound on the L channel only is recorded.

Compatible JVC microphones are:

- MV-P616 (Monaural)
- MV-P612 (Stereo/Monaural): Set the microphone mode switch to "Monaural".

6-7 Audio Input Signal Selection [E-ver.]

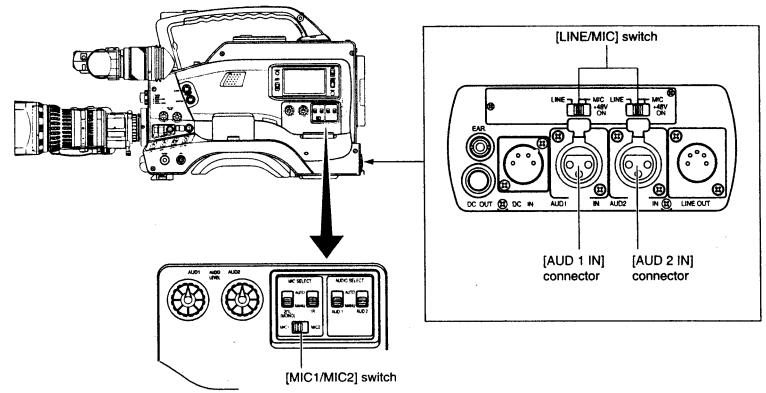

■ Selection of Front Microphone Connector

- Select the audio signal input among MIC 1 and MIC 2 connectors on the front panel using the [MIC1/MIC2] switch.
  MIC 1 : Inputs the audio signal from the microphone connected to the MIC 1 connector.
  MIC 2 : Input the audio signal from the microphone connected to MIC 2 connector.
- When the microphone of the MIC1 connector is used; Set the [FRONT MIC1 SELECT] of the SETUP MENU according to the microphone type (monaural or stereo) to be connected. (See page 62)

FRONT MIC 1 SELECT

no : Set to this position when using a monaural microphone.
St : Set to this position when using a stereo microphone.
* There is no need to set this menu switch when connecting a microphone to the MIC2 connector.

■ Selection of Rear Audio Input Connectors

- Select the audio signal input to the AUDIO INPUT connector using the [LINE/MIC] switch. Set for AUD-1 and AUD-2 connectors separately.
  LINE : Set to this position when connected to audio equipment, etc.
  The reference input level is +4 dBs.
  MIC : Set to this position when using the monaural microphone.
  The reference input level is -60 dBs.
  MIC +48 V : Set to this position when a microphone requiring +48 V DC power supply is connected. (Such as JVC MV-P615.)
- When the"A1A2 SET" in the VCR setup menu is set to "on", the audio input to AUD1 can be recorded onto audio channels DA1 and DA3 and the audio input to AUD2 can be recorded onto audio channels DA2 and DA4.

Refer to page 46 for the Allocation of Audio Input signals Recorded onto the PCM Audio Channel.

6-8 PCM Audio Channel Allocation of Audio Input Signal

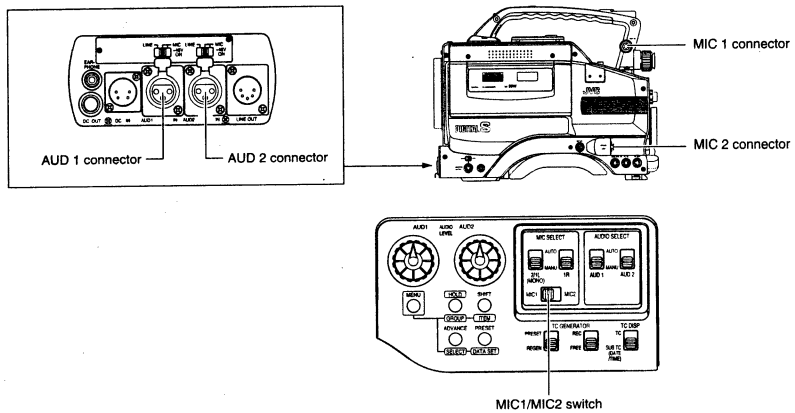

A total of four input connectors are provided for audio input.
To which PCM audio channel (DA1 to DA4) the audio signal to be recorded depends on the type of camera microphone connected to the MIC1 or MIC2 connectors which are on the front panel of the camera. Refer to the settings on the list below.

- Set the [MIC1/MIC2] switch and [FRONT MIC1 SELECT] on the VCR SETUP MENU according to the type of camera microphone to be connected. Refer to page 64 on the VCR SETUP MENU.

Allocation of Audio Input Signals Recorded onto PCM Audio Channels

Audio input connector	Switch	VCR SETUP MENU		PCM Audio channel			
	MIC1/MIC2	FRONT MIC1 SELECT	A1A2 SET	DA1	DA2	DA3	DA4
MIC 1 connector (6 Pin) Monaural microphone (MV-P616, etc.)	MIC 1	no (MONO)	oF	MIC1	AUD1	AUD2	AUD2
MIC 1 connector (6 Pin) Stereo microphone (PV-P612, etc.)	MIC 1	St (STEREO)	oF	MIC1L	MIC1R	AUD1	AUD2
MIC 2 connector (XLR, 3 Pin) Monaural microphone (phantom microphone)	MIC 2	Ineffective	oF	MIC2	AUD1	AUD2	AUD2
AUD1, AUD2 (XLR, 3 Pin)	Ineffective	Ineffective	on	AUD1	AUD2	AUD1	AUD2

- During playback the audio signal of the DA1/DA2 or the DA3/DA4 channel is output.
- The audio signals on the DA1 and DA2 channels are always recorded on the linear track of tape for audio search.

Note :
When the tape is in playback with a VCR (BR-D80E, BR-D40E or BR-D750E series, etc.) which is not compatible with 4 channel audio signal output, the sound of DA1 and DA2 only are output.

6-9 Recording Level Adjustment [U-ver.]

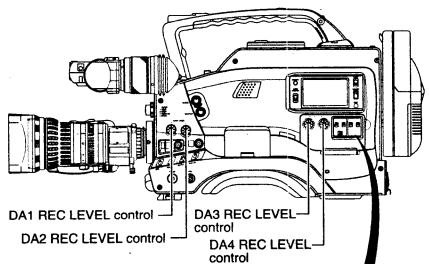

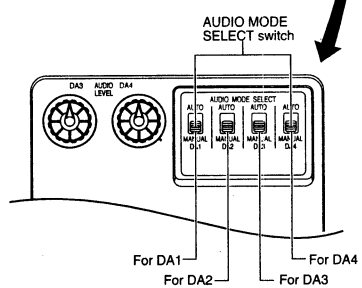

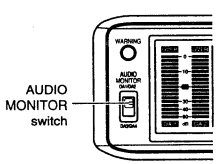

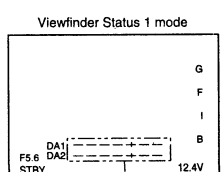

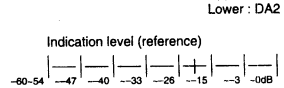

Either auto (fixed) or manual mode of the recording level adjustment can be selected for the audio signal at each audio input connector.
The recording level adjustment mode for each audio input connector DA1 - DA4 is selected with the AUDIO MODE SELECT switch.

■ Setting the AUDIO MODE SELECT Switch

AUTO : Recording level is fixed in this mode.
When the audio input exceeds the reference input level, the recording level is adjusted to the reference level.
However, even when the input level is lower than the reference input level, the recording level will not be increased.
The recording level volume cannot be controlled.

MANUAL : The recording level for DA1 - DA4 can be adjusted with the Rec. level control. (See below)

■ Manual Recording Level Adjustment

Recording level can be adjusted manually when the DY-90W is in the record, record-pause or stop mode.

1. Set the AUDIO MODE SELECT switch to "MANUAL" according to the input signal to be manually adjusted.
2. Select the audio level meter display mode for the display and viewfinder (DA1/DA2 or DA3/DA4 indication) using the AUDIO MONITOR switch.
3. Rotate the Rec level control corresponding to the required audio input. to be adjusted.
   - Adjust so that the peak level does not exceed the -3dB point when the loud sound is input.
   - With microphone input, since the limiter circuit is activated, the recording level does not exceed 0 dB even if the Rec level control is turned up.

Note :
When the DA1 or DA3 INPUT LINE/MIC switch on the rear panel is set to "MIC", be sure to check that the microphone is connected to the DA1 or DA3 INPUT connector. If the microphone is not connected, increasing the recording level could cause the noise from the input connector to be recorded on the tape. When the microphone is not connected to the DA1 or DA3 INPUT connector on the rear panel, set the LINE/MIC switch to "LINE" or lower the Rec level control.

6-9 Recording Level Adjustment [E-ver.]

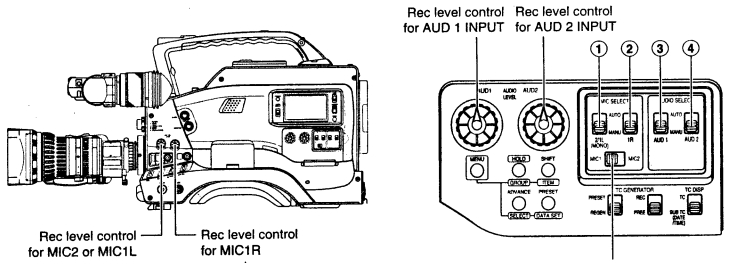

Rec level control
Adjusts the Rec level of the microphones of the following:
- Microphone of MIC 2 connector.
- Monaural microphone of MIC 1 connector.
- Stereo microphone L channel of MIC 1 connector.

Adjusts the Rec level of the microphone.
- Stereo microphone R channel of MIC 1 connector.

Select whether the recording level adjustment is set to Auto mode or Manual mode for each audio input connector using the AUTO/MANUAL select switches.

- When set to AUTO : Recording level is fixed. In this mode, the Rec level control does not function.
- When set to MANUAL : Recording level can be adjusted using the Rec level controls for each audio input.

Manual Recording Level Adjustment

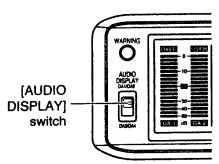

Viewfinder Status 1 mode

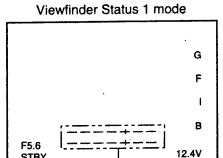

Audio level (will not be displayed while "LOW BATTERY" is being displayed.)
Upper : DA1 or DA3
Lower : DA2 or DA4

Indication level (reference)

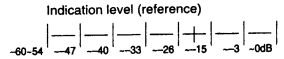

■ Recording level AUTO/MANUAL select switch

① Select switch for MIC2 or MIC1L
This function is available to the following microphones.
- Microphone of MIC2 connector.
- Monaural microphone of MIC1 connector.
- Stereo microphone L channel of MIC1 connector.

② Select switch for MIC1R
This function is available to the R-channel of the microphone of MIC1 connector.

③ Select switch for AUD 1 INPUT

④ Select switch for AUD 2 INPUT

Recording level can be adjusted manually when the DY-90W is in the record, record-pause or stop mode.

1. Set the AUTO/MANUAL switch to "MANUAL" according to the input signal to be manually adjusted.

2. Select the audio level meter display mode for the display and viewfinder (DA1/DA2 or DA3/DA4 indication) using the AUDIO DISPLAY switch.

3. Rotate the Rec level control corresponding to the required audio input. to be adjusted.
- Adjust so that the peak level does not exceed the -3dB point when the loud sound is input.
- With microphone input, since the limiter circuit is activated, the recording level does not exceed 0 dB even if the Rec level control is turned up.

Note :
When the AUDIO INPUT LINE/MIC switch on the rear panel is set to "MIC", be sure to check that the microphone is connected to the AUDIO INPUT connector. If the microphone is not connected, increasing the recording level could cause the noise from the input connector to be recorded on the tape. When the microphone is not connected to the AUDIO INPUT connector on the rear panel, set the LINE/MIC switch to "LINE" or lower the Rec level control.

6-10 Monitoring Audio During Recording

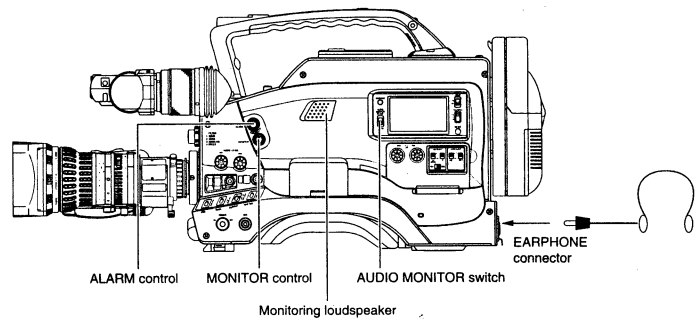

The audio input during recording, record-pause or stop mode can be monitored through the monitoring loudspeaker or earphone.

- The monitoring audio is not output from the loudspeaker while the EARPHONE jack is in use.
- Select the PCM audio channel to be monitored using the AUDIO MONITOR switch.
  DA1/DA2 : Outputs the audio signal input to the DA1 and DA2 PCM audio channels.
  DA3/DA4 : Outputs the audio signal input to the DA3 and DA4 PCM audio channels.
- The MONITOR control adjusts the monitoring volume.
- The loudspeaker or earphone outputs an alarm tone in the case of an abnormal condition occurring with the VCR section.
  An alarm tone is also output when the tape end is reached or when the battery is running down. The alarm tone volume can be adjusted with the ALARM control. For details on the alarm tone, see pages 81 and 82.

- Do not increase the audio monitoring volume too high, otherwise howling with the camera microphone may occur.

7. SHOOTING OPERATION

7-1 Basic Recording Operation

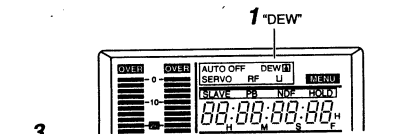

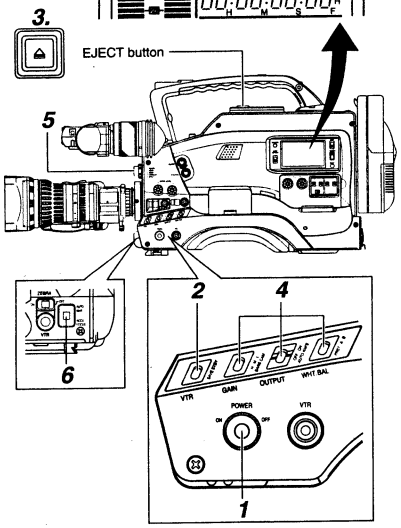

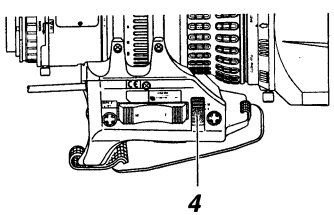

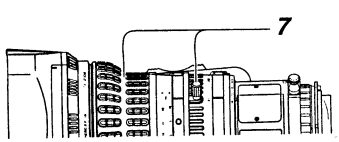

1. Turn the POWER switch to ON.
Power is then supplied to the unit.

> Check that the condensation display "DEW" does not appear on the display. If it is lit, wait until the indicator goes out.

2. Set the VTR switch to the STBY position.

> Even when the VTR switch is set to the "SAVE" position, pressing the VTR trigger button will start recording. However in this case, it is necessary to wait for a short time until the recording actually starts.
> For SAVE mode, see page 51.

3. Press the EJECT button to open the cassette cover, insert a cassette tape properly and close the cassette cover gently.
- Ensure that the REC switch on the back side of the cassette is set to ON.
  When the cassette cover is closed, the tape is loaded and the unit enters record-pause mode.

> - Use a cassette tape marked DIGITAL S. An S-VHS or a VHS cassette cannot be used with this VCR.
> - After the cassette cover is closed, it takes about 10 seconds before the unit is ready for recording.

4. Set the switches as required.
OUTPUT : "CAM/AUTO KNEE OFF"
WHT-BAL : "A" or "B"
GAIN : Sensitivity suitable for the subject
Set the IRIS switch of lens to "A".

5. Select the FILTER according to the lighting condition. [U-ver.]

Position 1 (3200K)	: For shooting indoors or outdoors when illumination is not sufficient
Position 2 (5600K)	: For shooting outdoors
Position 3 (5600K + 1/16ND)	: For shooting outdoors on a sunny day.
Position 4 (EFFECT)	: The cross effect filter makes the highlight sections shine like crosses and reduces the contrast. The corresponding color temperature is 3200K.

5. Select the FILTER according to the lighting condition. [E-ver.]

Position 1 (3200K)	: For shooting indoors or outdoors when illumination is not sufficient
Position 2 (5600K + 1/8ND)	: For shooting outdoors on a sunny day
Position 3 (5600K)	: For shooting outdoors
Position 4 (5600K + 1/64ND)	: For shooting outdoors on a sunny day.

6. Adjust the white balance. (See page 44.)

7. Point the camera at the subject and determine the angle of view and focus with the zoom lever and the focusing ring.

7-1 Basic Recording Operation (Cont'd)

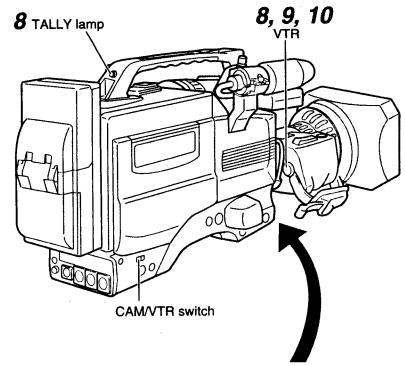

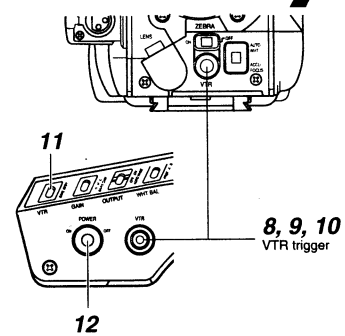

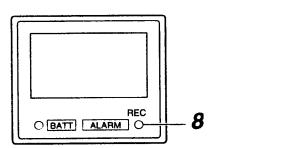

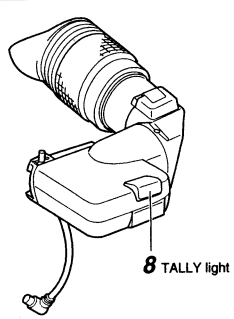

8. Press the VTR trigger on the unit or lens to start recording. Once recording has started, the tally lamps on the VCR section and the viewfinder tally light red, and the REC indication in the viewfinder lights green.

> **Note:**
> During time code generator use in the PRESET mode the sound trigger switch may be recorded when the VTR trigger on the lens is pressed.
> To avoid this, use the VTR trigger located at the power switch side.

9. To stop recording, press the VTR trigger again. The unit enters the Record-Pause mode.

> When the VTR trigger is pressed, the unit enters the record-pause mode after rewinding the tape for about 1 to 1.5 second (back-spacing).
> During the back-spacing, the last section recorded on the tape is played in the reverse direction. However, during play in the reverse direction, block noise appears. You can use this as a reference for confirming whether recording has been made or not.
> When the CAM/VTR switch is set to "VTR" and the setup menu item "BACK SPACE MODE SELECT" is set to "PB", the reverse playback image is output to the MONITOR OUTPUT connector and the viewfinder.

10. To restart recording:
Press the VTR trigger on the camera.

11. End recording.
Enter record-pause mode and perform the following operations as required.

■When it is required to unload the cassette tape :
- Press the EJECT button.

■When it is required to put the unit in save mode :
- Set the VTR switch to SAVE.
  Drum rotation stops and the DY-90W enters the tape protection/power-saving mode.

12. When shooting is completely finished, ejects the cassette and turn the power off.

> **Notes**
> - The STOP and EJECT buttons do not function during recording. These buttons function during the record-pause mode.
> - The REC/ALARM indicator (green) in the viewfinder blinks until recording actually starts. This is not due to any defect of the unit, but indicates that the VCR is preparing for recording.
> - If the VTR trigger button is pushed very quickly and repeatedly, the viewfinder record tally light may blink incorrectly and the DY-90W does not enter the record mode. To clear this condition, turn the POWER switch to OFF.
> - A neat transition to the next recorded scene cannot be guaranteed if you end a recording by setting the POWER switch to OFF. Be sure to enter record-pause mode before switching the unit OFF.
> - **After operating in the record-pause mode, wait for two seconds or more before switching off the power. If the power is switched off immediately after the record-pause mode is initiated, it automatically starts searching the end of the last recorded section when the power is switched to ON again, this takes approximately ten seconds. During this operation, entry to the record mode is possible but recording cannot be carried out until the search is completed.**
> - Before recording a scene which is particularly important, perform test shooting to ensure that normal recording is possible.
> - The power consumption can be reduced by setting the LIGHT switch on the display to OFF.

7-2 Save Mode

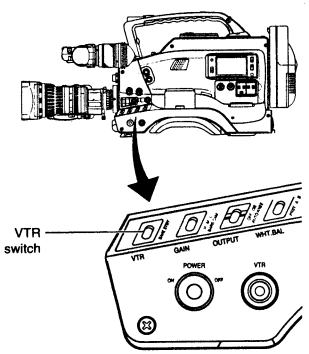

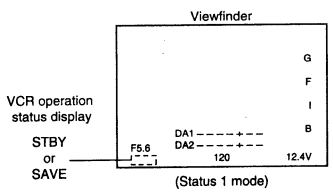

When a recordable cassette tape is loaded, the DY-90W enters the record-pause mode. However the record-pause operation condition differs depending on the setting of the VTR switch.

- VTR switch setting

STBY : The DY-90W enters the record-pause mode, and the drum is rotating at this time. (Standby mode)
A "STBY" indication appears in the VCR operation mode display in the viewfinder. (Status 1 mode)
- In this condition, pressing the VTR trigger button immediately starts recording.

SAVE : The DY-90W enters the record-pause mode, however, the drum is not rotating. (SAVE mode).
The tape is protected.
A "SAVE" indication appears in the viewfinder during (Status 1 mode).

Recording from the Save mode

- In the save mode, pressing the VTR trigger button will start recording.
However, in this case, there are several seconds of interval before the DY-90W starts recording.
- Pressing the VTR trigger button again stops recording and the DY-90W enters the save mode again.

7-3 If Unit is Left In Record-Pause (Standby) Mode

When the unit has remained in record-pause (standby) mode for about 30 minutes, the unit enters tape protect mode, in which the drum rotation is stopped automatically and the tape tension is released.

■To start recording from tape protect mode, press the VTR trigger button of the camera; the drum starts to rotate and recording starts in about 8 seconds.

■To return to record-pause mode from tape protect mode, press the VTR trigger button of the camera twice; the drum starts to rotate.

- The time until the unit enters the tape protect mode after it is put to record-pause mode can be set with the setup menu item "LONG PAUSE TIME SELECT" to 1 minute, 5 minutes or 30 minutes. (See page 64)

7-4 Checking Recorded Contents in Record-Pause Mode (Recording Check Function)

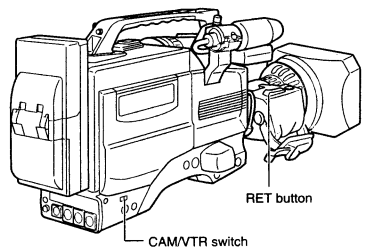

In the record-pause mode, the last recorded portion can be played back for approx. 2 seconds.

- The recorded contents can be checked with the viewfinder or the monitor connected to the MONITOR OUTPUT connector.

■Set the CAM/VTR switch to the "VTR" position beforehand.
- In the viewfinder or on the monitor connected to the MONITOR OUTPUT connector, the video image from the VCR section is output.

1. In the record-pause mode, press the RET button on the camera lens section.
- The tape is slightly rewound and played back for approx. 2 seconds.
After playback is finished, the tape is returned to the position at which the RET button is pressed and the record-pause mode resumes.

■When the RET button is kept pressed, the tape is rewound and played pack for approx. 10 seconds at maximum.

* This function is available even when the DY-90W is in the save mode (VTR switch set to SAVE position).
After operation is finished, the DY-90W enters the save mode.

7-5 Cueing the Scene Change Point

When successive recordings are made, cue the scene change point before starting recording.

- After the tape is run
- When the cassette tape is ejected and loaded again
- When recording from the middle of the recorded tape

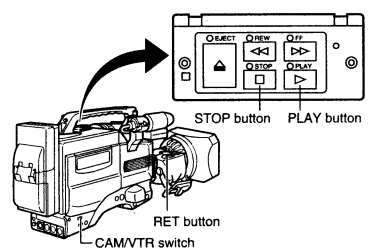

■To check the playback image with the viewfinder or monitor, set the CAM/VTR switch to the "VTR" position.

■Set the PRESET/REGEN switch to "REGEN" for continuous recording of the time code.

1. Press the STOP button to release the record-pause mode.

2. Press the PLAY button to start playback.

3. While watching the image on the viewfinder or on the monitor, press the STOP button at the point where you want to start recording.

4. Press the RET button on the camera lens section.
- Rewind the tape for playback of approx. 2 seconds, and search the scene change pilot signal while the tape is played back.

5. ■When the scene change pilot signal is detected, the DY-90W enters the record-pause mode from which the next recording is to be started.
■When the scene change pilot signal is not detected, the DY-90W enters the record-pause mode using the point as the scene change point at which the STOP button is pressed.

Notes :

- If the VTR trigger button is pressed in the middle of the automatic scene change cueing operation, the VTR trigger function is given priority so a neat transition to the next scene cannot be guaranteed.
- Be sure to use the VTR trigger button to end every recording (because a pilot signal for ensuring a neat transition to the next scene is recorded when this is done.)
- The proper functioning of the automatic scene change cueing cannot be guaranteed if the recording time before entering the record-pause mode is less than 2 seconds.

8. PLAYBACK MODE

8-1 Playback Procedure

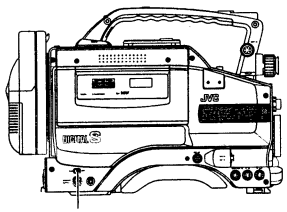

CAM/VTR switch

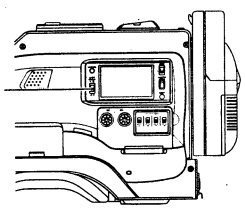

AUDIO MONITOR switch

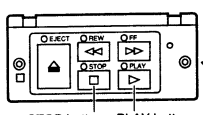

STOP button PLAY button

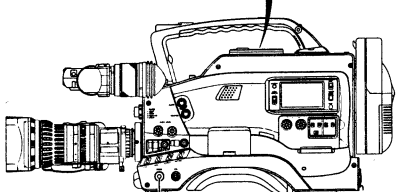

POWER switch

Setup

■Video output signal selection
- Set the CAM/VTR switch to the "VTR" position. In this mode, the viewfinder and MONITOR OUTPUT connector output the playback image of the VCR section.

■Audio output signal channel selection
During playback, the audio signal from the PCM audio channels is not output simultaneously. Two channels only are output during playback.
- Select the audio output channel using the AUDIO MONITOR switch.

DA1/DA2 : Outputs the audio signal from the DA1 and DA2 channels.
DA3/DA4 : Outputs the audio signal from the DA3 and DA4 channels.

Audio output signals are output from the AUDIO OUTPUT connector (5-pin), monitor speaker and earphone jack.

Operation

1. Turn the POWER switch to ON.
2. Load the recorded cassette tape correctly.
   ■When a recordable cassette tape (with REC switch on the back of the cassette set to ON) is loaded, the VCR section enters the record-pause mode (STBY or SAVE mode).
3. Press the PLAY button.
   → The PLAY indicator lights and playback starts.
4. To stop playback, press the STOP button.
   → The STOP indicator lights and the VCR section enters the stop mode.

Notes:
- This unit is not capable of a manual tracking adjustment. The tracking is adjusted automatically during playback.
- When playing back the tape recorded with another VCR, digital noise may be generated.
- This unit is not capable of still image playback.
- An S-VHS or a VHS cassette tape cannot be used with this unit.
- When the automatic tracking function is activated at the start of the playback mode, digital noise may appear on the playback image.
- At the start of the playback mode, the audio signal from the linear tracks will be output. When the tape running is stabilized, the PCM audio signal is output.
  Only the DA1 and DA2 channel signals are recorded on the linear tracks. For this, even when the VCR section is in the DA3/DA4-channel output mode, only the DA1 and DA2 channel audio signals recorded on the linear tracks are output at the start of the playback mode.

8-2 Fast-Forward, Rewind

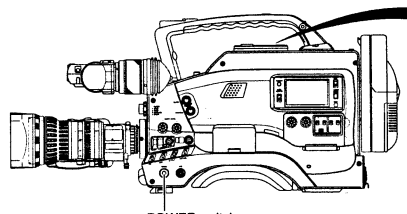

POWER switch

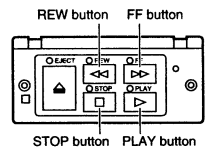

REW button FF button STOP button PLAY button

■Press the FF button in stop mode to fast forward tape and press the REW button in stop mode to rewind tape.
■In fast forwarding and rewinding, the EE image and EE audio signal are output.
■Press the STOP button to stop fast forwarding or rewinding.

- When the tape approaches the end during fast forwarding or rewinding, the tape speed decelerates to protect the tape.

8-3 Search

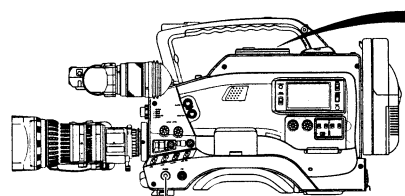

POWER switch

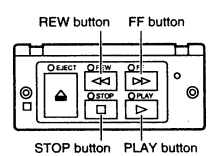

REW button FF button STOP button PLAY button

■Press the FF button in play mode to search the tape in the forward direction at about 2 to 6 times the normal speed.
Press the REW button in play mode to search the tape in the reverse direction at about 1 to 6 times the normal speed.
■Press the PLAY button to resume normal playback.

Note:
When the mode is changed from search to play mode, characters are displayed for a moment on the viewfinder screen. This is not a malfunction.

- The audio recorded on the linear track of the tape is reproduced during the search.
- Regardless of the setting of the AUDIO MONITOR switch, the audio signals from DA1 and DA2 channels are output.
- Video noise may be observed or the image may become unstable during the search, but this is not a malfunction.

9. TIME CODE OPERATION

This unit records 2 time code areas on the tape; the main time code area which contains time codes for use as time data in editing, etc., and the sub-time code area which can optionally contain the date and time data.

- The main time code area contains the recording of SMPTE-standard time codes and user's bits. In play mode, the reproduced time codes or user's bits are shown on the counter display.
- The sub-time code area contains the recording of the date and time data, which can also be shown on the counter display during playback.

> - Neither the main time code nor sub-time code data is output through the MONITOR OUTPUT connector.
> - The generated time-codes are output from the TC OUT connector.

The following description begins with the handling method of the main time code. That of the sub-time code will be described from page 60.

9-1 Displaying Time Code

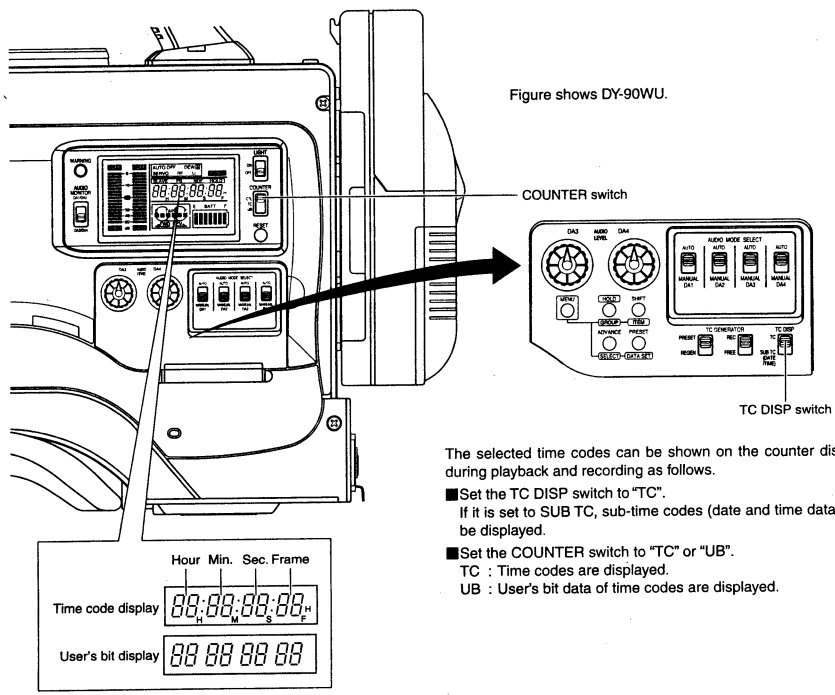

Figure shows DY-90WU.

The selected time codes can be shown on the counter display during playback and recording as follows.

■Set the TC DISP switch to "TC".
If it is set to SUB TC, sub-time codes (date and time data) will be displayed.

■Set the COUNTER switch to "TC" or "UB".
TC : Time codes are displayed.
UB : User's bit data of time codes are displayed.

9-2 Presetting and Recording of Time Code

The time code or user's bit data to be recorded onto the tape can be preset to a desired value.

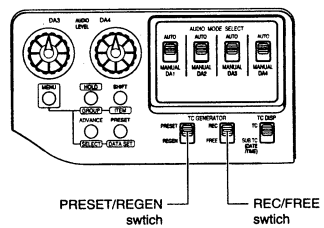

■Setting the switches in the TC GENERATOR block

- Set the PRESET/REGEN switch to PRESET.
- Set the REC/FREE switch as follows.
  REC : The data preset in the time code generator runs only during recording. Use this setting to record continual time codes across scenes when recording them one after another.
  FREE : The data starts to run from the moment it has been preset in the time code generator.

> **Drop frame/Non-drop frame modes [U-ver.]**
>
> With the NTSC format, the actual number of frames per second is about 29.97 frames, while the number of frames assumed for use in time code processing standard is 30 frames. The drop frame mode compensates for this difference by dropping frames 00 and 01 at every minute whose figure cannot be divided by 10. The non-drop frame mode ignores the above difference and does not drop frames.

■Setup menu setting [U-ver.]

Select the framing mode of the time code generator with setup menu item "TCG SELECT DROP/NON-DROP".

dF : The time code generator runs in drop frame mode. Use this setting when putting importance on the recording time.
nF : The time code generator runs in non-drop frame mode. Use this setting when putting importance on the number of frames. The NDF indicator on the LCD display lights in non-drop frame mode.

TIME CODE PRESETTING PROCEDURE

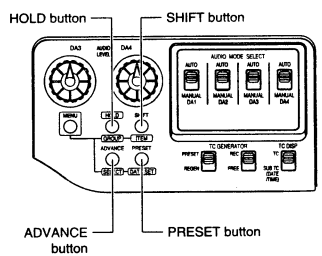

1. Display the time code on the counter display.
Set the COUNTER switch to TC.
• Time code up to 23 hrs. 59 min. 59 sec. 29 frames (U-ver.)/ 24 frames (E-ver.) can be preset.

2. Put the time code generator in preset mode.
Press the HOLD button.
The HOLD indicator lights on the display to indicate the preset mode. The first digit of the counter display blinks.

3. Set the value of the blinking digit.
Press the ADVANCE button.
The value of the blinking digit changes.

4. Change the blinking digit.
Press the SHIFT button.
The blinking digit changes.

5. Set the desired value for all digits.
Repeat steps ***3*** and ***4*** for each digit.

6. Preset the set data in the memory.
Press the PRESET button.
The set data is saved as the time code generator value. After the above operation, the HOLD indicator disappears from the display, the counter stops blinking and the time code is preset.
• If the REC/FREE switch is set to FREE, the time code starts to run.
If you preset a wrong time code, perform steps ***3***, ***4***, ***5*** and ***6*** again.

9-2 Presetting and Recording of Time Code (Cont'd)

PRESETTING USER'S BIT DATA

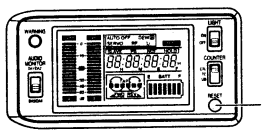

- Pressing the RESET button in preset mode resets the time code or user's bit data to 00 00 00 00.
- If you have pressed the HOLD button by mistake, press the HOLD button again to return to the previous display.

■Display user's bit data on the counter display and perform the same procedure as the time code presetting procedure.
- The user's bit can be specified using numerals or alphabets from 0 to F for each digit.

9-3 Recording Time Codes Continuously From Time Codes Recorded on Tape

The unit also incorporates a time code reader. Therefore, when the unit enters record mode from record-pause mode, it can read the time code data recorded on tape and record continual time codes after it. The recorded user's bit data is identical to the user's bit data recorded on tape.
To make this possible, set the switches in the TC GENERATOR block as follows before starting recording.

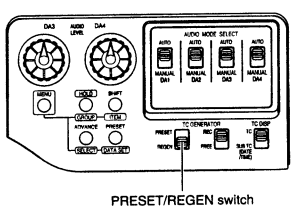

Figure shows DY-90WU.

When the PRESET/REGEN switch is set to REGEN, the time taken for entering record mode from record-pause mode becomes slightly longer.

■Setting

- Set the counter display to display time codes or user's bit data.
- Set the PRESET/REGEN switch to REGEN.
  The time code run mode becomes unrelated to the REC/FREE switch settings.
- The framing mode of the time code generator becomes automatically identical to the mode used by the time codes recorded on the tape (drop frame or non-drop frame mode). — U-ver. only

9-4 Recording Time Codes by Slave-Locking the Built-in Time Code Generator with the External TCG

The built-in time code generator can be synchronized (slave-locked) with the SMPTE/EBU-standard LTC time code signal which is input through the TC IN connector. Once the slave locking has been carried out, the built-in time code generator runs even when the external time code input stops. Even when the power is switched off, it continues to run on the backup lithium battery.

Note :
When the power is switched ON while external sync signal is input, the screen moves in a vertical direction for a few seconds. This is not a malfunction.

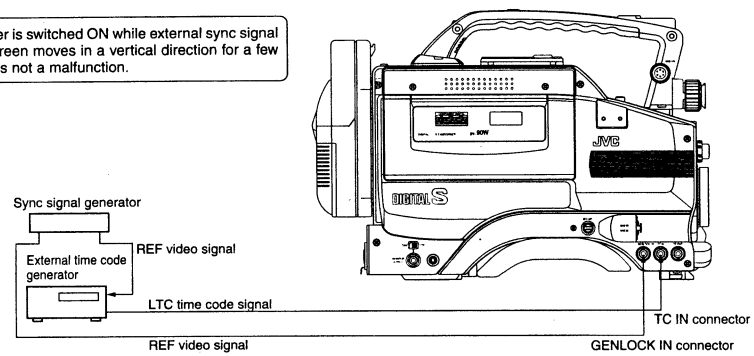

1. Input the reference video signal into the external time code generator and the GEN LOCK IN connector of this unit.

2. Display time code on the counter display.

3. Set the switches in the TC GENERATOR block as follows.
- Set the PRESET/REGEN switch to "PRESET".
- Set the REC/FREE switch to "FREE".

■ Setup menu setting
Set setup menu item "U-BIT SLAVE ON/OFF" as required.
- Set to "ON" if you want to also slave lock the user's bits to the external time code generator.

U-ver.
The framing mode is set automatically to the same mode as the input time code (drop frame or non-drop frame mode). The NDF indicator lights on the display if the framing mode is the non-drop frame mode.

4. Set and operate the external time code generator.
→ The built-in time code generator is slave-locked with the input external time code data.
The SLAVE indicator lights on the display.

* If the external time code generator phase is not genlocked with the phase of the camera video signals, the "SLAVE" display will flicker.
- Once slave locking has been made, the built-in time code generator keeps on running even when the external time code generator is stopped.

Note :
- While the REC/FREE switch is set to "REC", slave-locking will not take place.
  Do not connect or disconnect slaves during recording as this may disturb the servo lock.

Multi-Camcorder Master-Slave Connection

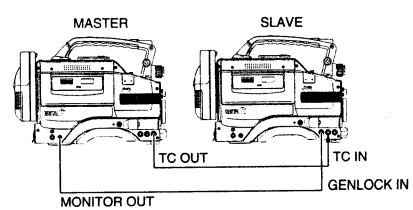

When there is only one slave DY-90W, connect it as indicated in the figure left.
When connecting several DY-90Ws as slaves, input the REF video signal to GENLOCK IN connectors of all these units from the sync signal generator.

9-5 Reproducing Time Codes

The unit incorporates a time code reader which outputs the time codes and user's bit data recorded on the played tape is displayed on the counter display. The played time codes and user's bit data are not output from the TC OUT and MONITOR OUTPUT connector.

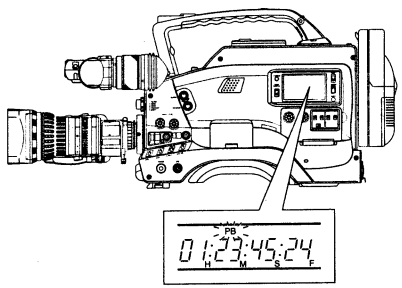

■Set the counter display to display time codes or user's bit data.

■Reproduce time codes.
Press the PLAY button.
→ The PB indicator lights on the display and the reproduced time code or user's bit data is displayed.

9-6 Sub-Time Code (Date, Time)

The unit records a sub-time code area as an additional time code recording area to the main time code area.
The sub-time code area contains data on the date and time of the day.

DISPLAYING SUB-TIME CODE

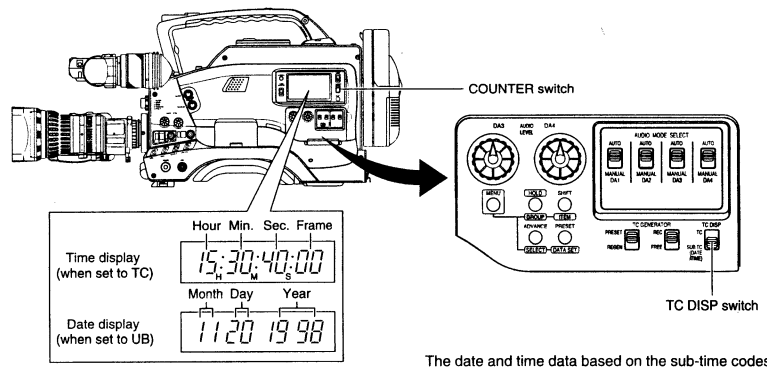

The date and time data based on the sub-time codes can be displayed during playback and recording.

■Set the TC DISP switch to "SUB TC".

■Set the COUNTER switch to "TC" or "UB".
When set to TC : Time data (hour, minute, second, frame) is displayed.
When set to UB : Date data (month, day, year) is displayed.

9-6 Sub-Time Code (Date, Time) (Cont'd)

SETTING THE DATE AND TIME

The set date and time data is stored in the sub-time code area on tape.
The set date/time data will continue the counting on the backup lithium battery, even when the power is switched off.

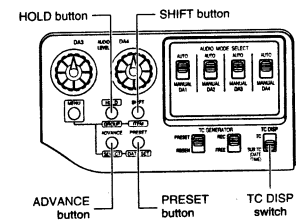

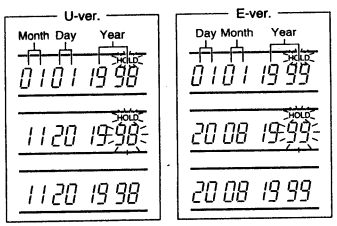

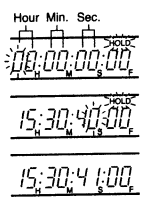

■ Setting the Date

1. Display the date on the counter display.
   ■ Set the TC DISP switch to SUB TC and the counter switch to UB.
2. Press the HOLD button to initiate the setting mode.
   The HOLD indicator lights on the display, indicating that the VCR is in the setting mode.
   The the first two digits of the counter display blinks.
3. Set the figures of the month.
   • Press the ADVANCE button to set the figure of the blinking digit.
4. Similarly, set the figures of day and year by pressing the SHIFT button to change the blinking digit and pressing the ADVANCE button to set its figure.
5. Press the PRESET button to save the set date in the memory.
   The HOLD indicator on the display turns off and the date display stops blinking.

■ Setting the Time of the Day

1. Display the time data on the counter display.
   ■ Set the TC DISP switch to SUB TC and the counter switch to TC.
2. Press the HOLD button to initiate the setting mode.
   The HOLD indicator lights on the display, indicating that the VCR is in the setting mode.
   The first digit of the counter display blinks.
3. Similarly to the date setting operation, set the figures of the hour, minute and second using the SHIFT and ADVANCE buttons.
   • The hour should be set in the 24-hour mode.
   • The frame cannot be set. It will be fixed to 00.
4. Press the PRESET button to save the set time in the memory.
   The HOLD indicator on the display turns off and the time starts to count.

REPRODUCING THE DATE AND TIME

The recorded date and time data is not included in the video signal output from the VIDEO OUT connector or the time code signal output from the TC OUT connector.
The data is displayed only on the counter display of the VCR section during playback of the tape.

- When a tape recorded with this unit is played on a desk-top type DIGITAL S VCR (e.g. JVC BR-D50U/D51U/D80U/D85U, etc.), the date or time data is shown on the sub-time code display of the DIGITAL S VCR. The time data is displayed when the COUNTER switch of the DIGITAL S VCR is set to TC, and the date data is displayed if the switch is set to UB.

10. SETUP MENU

10-1 VCR Setup Menu

The setup menus for VCR section can be set by referring to its counter display.
The setup menu is not output to the MONITOR OUTPUT connector or viewfinder.
The set contents are stored in the memory and held even after the power is switched OFF.

VCR SETUP MENU CONFIGURATION

The setup menus are divided into 4 groups. Groups 1, 2 and 3 consist of display-only items such as the hour meter display, while Group 4 contains some items which can be set individually as required.

[U-ver.]

Setup menus		Display/Setting Contents
Group 1		Hour meter (Drum running time) display
Group 2		Remaining tape (hour:min.) display
Group 3		Battery voltage display
Group 4	Item	: Selection of time code generator framing mode (drop frame/non-drop frame)
	Item	: Selection of user's bit data during slave locking to time code (ON/OFF)
	Item	: Selection of battery type (12 V/13.2 V/14.4 V)
	Item	: Selection of long pause time (1 min./5 min./30 min.)
	Item	: Selection of audio signal low frequencies cut for rear DA1 input connector (OFF/ON)
	Item	: Selection of audio signal low frequencies cut for front DA2 (MIC) input connector (OFF/ON)
	Item	: Selection of audio signal low frequencies cut for rear DA3 input connector (OFF/ON)
	Item	: Selection of audio signal low frequencies cut for front DA4 (MIC 1) input connector (OFF/ON)
	Item	: Selection of image to be viewed in the Viewfinder or monitor during back spacing (PB/EE)

[E-ver.]

Setup menus		Display/Setting Contents
Group 1		Hour meter (Drum running time) display
Group 2		Remaining tape (hour:min.) display
Group 3		Battery voltage display
Group 4	Item	: Selection of user's bit data during slave locking to time code (ON/OFF)
	Item	: Selection of battery type (12 V/13.2 V/14.4 V)
	Item	: Selection of long pause time (1 min./5 min./30 min.)
	Item	: Selection of audio signal low frequencies cut for rear audio input connectors (OFF/ON/AUD1 only/AUD2 only)
	Item	: Selection of audio signal low frequencies cut for front MIC1/2 input connectors (OFF/ON/MIC1 only/MIC2 only)
	Item	: Selection of camera microphone (MONAURAL/STEREO) to be connected to [MIC1] connector.
	Item	: Selection of image to be viewed in the Viewfinder or monitor during back spacing (PB/EE)

10-1 VCR Setup Menu (Cont'd)

DISPLAYING AND SETTING VCR SETUP MENUS

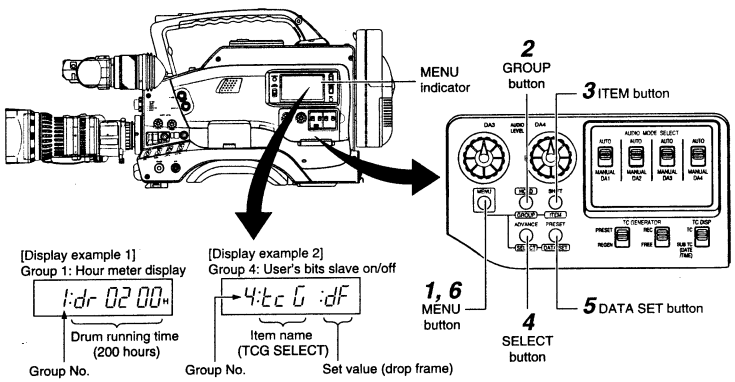

1. Enter setup menu mode.
Press the MENU button.
→ The MENU indicator lights on the display and the counter display shows the setup menu.

2. Select the group.
Press the GROUP button.
→ The group No. shown on the counter display changes.
• Each press of the GROUP button changes the displayed group No. from Group 1 Group 2 Group 3 Group 4 Group 1....

■ To exit from setup menu mode after simply confirming the display in Group 1, 2 or 3, press the MENU button now. The VCR section returns to normal mode.

■ Proceed to the following steps when you want to confirm or set the setup menus in Group 4.

3. Select a Group 4 item.
Press the ITEM button
→ The setup menu item shown on the counter display changes.

• Pressing the ITEM button when the Group 1, 2 or 3 display is shown does not change it.

4. Select the setting value of the selected setup menu item.
Press the SELECT button to select the setting value.
• Repeat steps 3 and 4 above for each of the items you want to set.

5. Save the setting value.
Press the DATA SET button.
→ "SAVE" is displayed on the counter and the setting value is saved in the VCR memory. The counter display returns to the setup menu display when data has been saved.

4:-SAu:E- [U-ver.]

SAu:0 [E-ver.]

6. Quit setup menu mode.
Press the MENU button.
The VCR section returns to normal mode.

• If setup menu mode is quitted without saving the setting value changed with the SELECT button, "Abort" is displayed on the counter display for about 3 seconds.
To display the previously operated setup menu again, press the MENU button again while "Abort" is displayed.

10-1 VCR Setup Menu (Cont'd)

SETUP MENU CONTENTS [U-Ver.]

Group No.	Setup Menu Name		Counter Display	Contents
1	DRUM HOUR METER		1:dr 02 00H	• Shows the accumulated running time of the head drum. (200 hours in this example)
2	TAPE REMAIN		2:tr 00:30	• Shows the remaining tape time in "hours:mins.". (30 minutes) • Sometimes when an extended tape over 104 minutes is used, especially at the beginning of the tape, the tape remaining indication is incorrectly displayed as a value less than it should be.
3	BATTERY VOLTAGE		3:bt 12:5u	• Battery voltage in V. (12.5 V)
4	ITEM	TCG SELECT DROP/NON-DROP	4:tc G :dF ↕ nF	• Selects time code generator framing mode between drop frame and non-drop frame mode. dF : Built-in TCG runs in drop frame mode. Use this setting when recording time is important. nF : Built-in TCG runs in non-drop frame mode. Use this setting when frame count is important. • Factory setting: dF (Non-drop frame mode)
		U-BIT SLAVE ON/OFF	4:Et Ub:on ↕ oF	• Selects whether user's bit data is also slave-locked when the unit is slave-locked to an external TCG. on : Slave locked. oF : Not slave locked. • Factory setting: oF (Not slave locked)
		BATT.TYPE SELECT • If this setting is wrong, the remaining battery power display and the battery alarm will not function properly.	4:bA tt: 12 ↕ 13 ↕ 14	• Set according to the type of battery pack in use. 12 : 12 V (Set when using the NB-G1 or a 12VDC Flat Shape Type battery pack.) 13 : 13.2 V (Set when using Anton-Bauer Trimpack 13, Propack 13, Magnum 13 or Compack 13.) 14 : 14.4 V (Set when using Anton-Bauer Trimpack 14, Propack 14, Magnum 14 or Compack 14.) • Factory setting: 12 (12 V) • When powered through the DC input connector, the setting is fixed at 12 V.
		LONG PAUSE TIME SELECT	4:Ln GP:01 ↕ 05 ↕ 30	• Sets the time before the VCR section in record-pause or stop mode enters the tape protect mode (in which the drum stops rotation). 01 : 1 minute 05 : 5 minutes 30 : 30 minutes • Factory setting : 30 (30 minutes)
		DA1 LOW CUT SELECT	4:Lc A1:oF ↕ on	• Selects whether the low frequencies of the audio signal from the audio input connectors (DA1 to DA4) are cut or not. Set to ON when reducing the wind noise of the microphone. Each item should be set for each input connector. oF : OFF (without LOW CUT function) on : ON (with LOW CUT function) • Factory setting : oF
		DA2 LOW CUT SELECT	4:Lc A2:oF ↕ on	
		DA3 LOW CUT SELECT	4:Lc A3:oF ↕ on	
		DA4 LOW CUT SELECT	4:Lc A4:oF ↕ on	
		BACK SPACE MODE SELECT	4:bc SP:Pb ↕ EE	• Selects an image to be viewed in the viewfinder or monitor during backspacing in the Record/Pause mode. (Effective only when the CAM/VTR switch is set to VTR). Pb : Allows viewing of the last section recorded on the tape in reverse playback. It may result in some block noise. EE : Allows viewing of the image coming from the camera. • Factory Setting: EE

10-1 VCR Setup Menu (Cont'd)

SETUP MENU CONTENTS [E-Ver.]

Group No.	Setup Menu Name		Counter Display	Contents
1	DRUM HOUR METER		1:dr·02 00H	• Shows the accumulated running time of the head drum. (200 hours in this example)
2	TAPE REMAIN		2:tr·00:30	• Shows the remaining tape time in "hours:mins.". (30 minutes)
3	BATTERY VOLTAGE		3:bt· 12.5u	• Battery voltage in V. (12.5 V)
4	ITEM	U-BIT SLAVE ON/OFF	4:Et Ub:on ↕ oF	• Selects whether user's bit data is also slave-locked when the unit is slave-locked to an external TCG. on : Slave locked. oF : Not slave locked. • Factory setting: oF (Not slave locked)
		BATT.TYPE SELECT • If this setting is wrong, the remaining battery power display and the battery alarm will not function properly.	4:bA tt: 12 ↕ 13 ↕ 14	• Set according to the type of battery pack in use. 12 : 12 V (Set when using the NB-G1 or a 12 VDC Flat Shape Type battery pack.) 13 : 13.2 V (Set when using Anton-Bauer Trimpack 13, Propack 13, Magnum 13 or Compack 13.) 14 : 14.4 V (Set when using Anton-Bauer Trimpack 14, Propack 14, Magnum 14 or Compack 14.) • Factory setting: 14 (14.4 V) • When powered through the DC input connector, the setting is fixed at 12 V.
		LONG PAUSE TIME SELECT	4:Ln GP:01 ↕ 05 ↕ 30	• Sets the time before the VCR section in record-pause or stop mode enters the tape protect mode (in which the drum stops rotation). 01 : 1 minute 05 : 5 minutes 30 : 30 minutes • Factory setting : 30 (30 minutes)
		AUDIO LOW CUT SELECT (REAR)	4:Lc tA:oF ↕ on ↕ 01 ↕ 02	• Selects whether the low frequencies of the audio signal from the rear audio input connectors are cut or not. Set to ON when reducing the wind noise of the microphone. oF : Both AUDIO 1/2 inputs are set to OFF. on : Both AUDIO 1/2 inputs are set to ON. 01 : AUDIO 1 input is set to ON. 02 : AUDIO 2 input is set to ON. • Factory setting : oF
		AUDIO LOW CUT SELECT (FRONT)	4:Lc tF:oF ↕ on ↕ 01 ↕ 02	• Selects whether the low frequencies of the audio signal from the front MIC 1/2 input are cut or not. Set to ON when reducing the wind noise of the microphone. oF : Both MIC 1/2 inputs are set to OFF. on : Both MIC 1/2 inputs are set to ON. 01 : MIC 1 input is set to ON. 02 : MIC 2 input is set to ON. • Factory setting : oF
		FRONT MIC 1 SELECT	4:Fr 1 :no ↕ St	• Selects the camera microphone type (monaural or stereo) to be connected to MIC 1 connector. This menu item is only available when the MIC1/MIC2 switch is set to "MIC 1" position. no : Set to this position when using a monaural microphone. st : Set to this position when using a stereo microphone. • Factory Setting: no (Monaural) * With this menu switch setting, the recording channel allocation of the PCM audio is changed. See page 46
		A1A2 SET	4:A 1A2:oF ↕ on	• Records the audio signals input at the AUD1 and AUD2 terminals on the rear panel onto all the audio channels. oF : The audio signal input to the MIC 1 or MIC 2 is recorded as well. on : The audio input to AUD1 is recorded onto audio channels DA1 and DA3 and the audio input to AUD2 is recorded onto audio channels DA2 and DA4.
		BACK SPACE MODE SELECT	4:bc SP:Pb ↕ EE	• Selects an image to be viewed in the viewfinder or monitor during backspacing in the Record/Pause mode. (Effective only when the CAM/VTR switch is set to VTR). Pb : Allows viewing of the last section recorded on the tape in reverse playback. It may result in some block noise. EE : Allows viewing of the image coming from the camera. • Factory Setting: Pb (PB)

10-2 Camera Section Setup Menu

In the camera section of this unit, there are two menu screens; MAIN MENU and ADVANCED MENU.

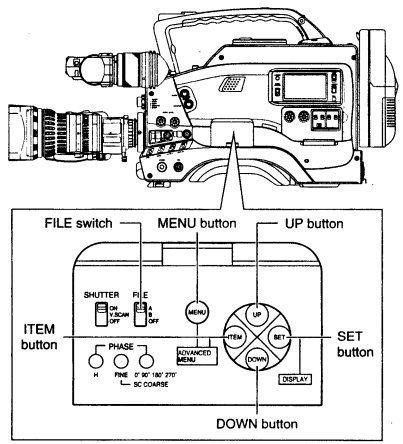

MAIN MENU

Includes convenient functions for use in recording, for example the detail enhancement function.

ADVANCED MENU

- OPERATION Used to change the factory-set values for the zebra pattern display, gain, etc.
- PROCESS Used to fine-adjust the gamma characteristic, etc, of the camera input signal.
- SCENE FILE Used to register the set values.

Either of these menu screens are displayed in the viewfinder. For operation, refer to the operation method of each menu screen.

■ MAIN

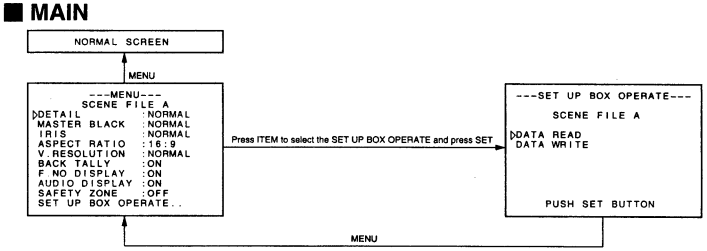

■ ADVANCED

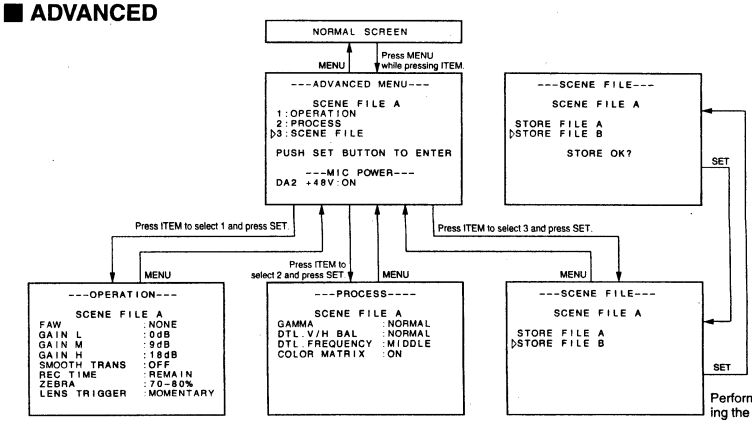

Perform this when registering the data of FILE A or B.

10-3 Camera Section MAIN MENU Screen

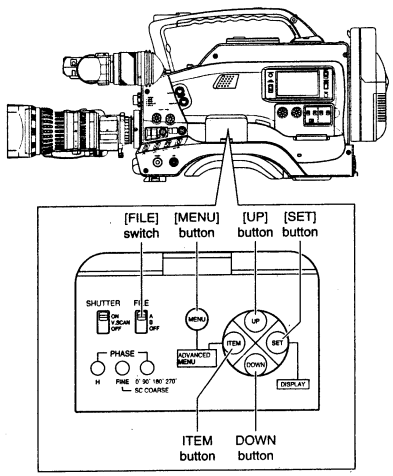

<Setup Procedure>

1. Using the FILE switch, select the required file to be set up.
2. On the normal screen, press the MENU button to display the MAIN MENU screen in the viewfinder.
3. Using the ITEM button, move the cursor (▷) to the required item to be set up.
4. Change the setting value using the UP or DOWN button.
5. Press the MENU button to resume the normal screen. At this time, the setting values are registered into the memory of DY-90W. The set values are maintained even if the power is turned off.

A registered FILE can be recalled only by performing the procedure 1. and the registration of another FILE cannot then be executed.

Cursor

```
---MENU---
SCENE FILE A
▷DETAIL          :NORMAL
 MASTER BLACK    :NORMAL
 IRIS            :NORMAL
 ASPECT RATIO    :16:9
 V.RESOLUTION    :NORMAL
 BACK TALLY      :ON
 F.NO DISPLAY    :ON
 AUDIO DISPLAY   :ON
 SAFETY ZONE     :OFF
 SET UP BOX OPERATE..
```

Item	Function, Operation	Variation Range		Initial Setting
		U-ver.	E-Ver.	
DETAIL	Adjusts the detail enhancement level. • To sharpen details ..... Increase the number. • To soften details ..... Decrease the number.	MAX (9) 8 1 NORMAL (0) –1 –6 MIN (–7)	MAX (7) 6 1 NORMAL (0) –1 –7 MIN (–8)	NORMAL
MASTER, BLACK	Adjusts the pedestal level (master black) which is the reference of black. • To increase the pedestal level ..... Increase the number. • To decrease the pedestal level ..... Decrease the number.	MAX (10) 9 1 NORMAL (0) –1 –9 MIN (–10)		NORMAL
IRIS	Changes the setting value of the detecting level in the auto iris mode. • PEAK ..... Detects the peak level of brightness • NORMAL ..... Detects normal level • AVG ..... Detects the average level of brightness	PEAK NORMAL AVG		NORMAL
ASPECT RATIO	Switches the picture size of the video signal. (The wide screen ID signal is not output.) 16 : 9 ..... 16 : 9 size picture. 4 : 3 ..... 4 : 3 size picture. When an A19X8.7BW lens is used, if it is switched to the 4:3 side, the picture size will be 4:3.	16 : 9 4 : 3		16 : 9
V.RESOLUTION	Increases the vertical resolution. • NORMAL ..... Vertical resolution 380 (U-ver.) / 450 (E-ver.) lines. • V.MAX ..... Vertical resolution 450 (U-ver.) / 540 (E-ver.) lines The sensitivity is degraded and the bright section may be colored depending on the objects.	NORMAL V. MAX		NORMAL

10-3 Camera Section MAIN MENU Screen (Cont'd)

Item	Function, Operation	Variation Range	Initial Setting
BACK TALLY	Selects whether the BACK TALLY lamp on the handle section of this unit is activated or not. ON ..... BACK TALLY lamp lights in record mode. OFF ..... BACK TALLY lamp is not lit in record mode.	ON OFF	ON
F NO.DISPLAY	Selects whether the F number of the lens iris is displayed in the Status 1 screen or not. ON ..... F number is displayed. OFF ..... F number is not displayed.	ON OFF	ON
AUDIO DISPLAY	Selects whether the audio indicator is displayed in the Status 1 screen or not. ON: Audio indicator is displayed. OFF: Audio indicator is not displayed.	ON OFF	ON
SAFETY ZONE	Selects the safety zone setting. See "Safety Zone" on page 29.	OFF ZONE1 ZONE2 ZONE3	OFF
SET UP BOX OPERATE	Recalls the set up box operation screen. See "Set Up Box Operation" on page 78.		

10-4 Camera Section ADVANCED MENU Screen

In the ADVANCED MENU screen, there are two sub-menu screens ; **1 : OPERATION** (for operations) and **2 : PROCESS** (for video adjustments).
The values set in the ADVANCED MENU screen can be registered in the three types of memory areas — FILE A, FILE B and FILE OFF. When the values registered in FILE A and FILE B are stored in the memory of this unit with 3: SCENE FILE screen, they are maintained even when the power is turned OFF. The values registered in the FILE OFF are registered in the memory of the DY-90W when the ADVANCED MENU screen is resumed, therefore, they are also maintained when the power is turned off.

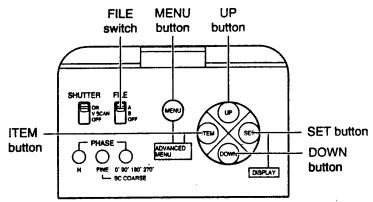

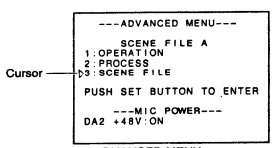

ADVANCED MENU screen

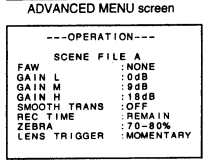

Select screen

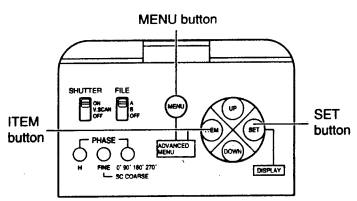

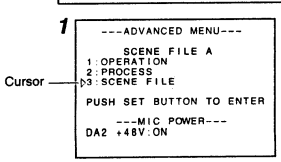

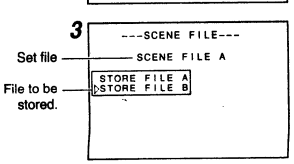

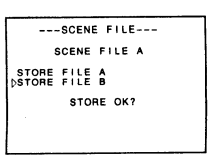

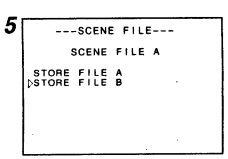

SCENE FILE screen

<Setup Procedure>

1. Set the FILE switch to the file position to be set up. (FILE A, B, OFF)
2. In the normal screen, while pressing the ITEM button, press the MENU button to display the ADVANCED MENU screen in the viewfinder.
3. Press the ITEM button to move the cursor (▷) to the select screen (1 : OPERATION or 2 : PROCESS).
4. Press the SET button to display the select screen.
5. On the select screen, select the setting item using the ITEM button. (The selected item blinks.)
6. Using the UP or DOWN button, change the value of the selected item.
7. After the setting is finished, press the MENU button to return to the ADVANCED MENU screen.
   To register the setting values for FILE A or B, carry out the following procedure. The data in the FILE OFF is registered when the screen returns to the ADVANCED MENU.
   The registered data is maintained even if the power is turned off.

<Registration Procedure>

When the registration of FILE A or B is performed, since the setting value is stored in the memory of this unit, it is not cleared even when the power is turned OFF.
(Registration operation is not required for the data of FILE OFF.)

1. Press the ITEM button to move the cursor (▷) to the 3 : SCENE FILE item.
2. Press the SET button to display the SCENE FILE screen.
3. Press the ITEM button on the SCENE FILE screen to select the stored file.
4. When the SET button is pressed, the "STORE OK?" and "SCENE FILE" screens are displayed.
5. When the SET button is pressed again, the setting value is stored in the file that is selected in procedure 3.
6. When the MENU button is pressed, the normal screen is resumed.

10-4 Camera Section ADVANCED MENU Screen (Cont'd)

OPERATION SCREEN

Item	Function, Operation	Variation Range	Initial Setting
FAW	Selects the position of the W.BAL switch ⑫ (on page 13) where the FAW (Full-Time Auto White Balance Adjustment) function is to be assigned. NONE ..... FAW function is not used. A ..... FAW is assigned to the A position. B ..... FAW is assigned to the B position. PRESET .... FAW is assigned to the PRESET position.	NONE A B PRESET See page 44 for the FAW function.	NONE
GAIN L	Selects the gain value in the GAIN L position of the sensitivity select switch.	–3dB 0dB 6dB 9dB 12dB 18dB ALC (Auto gain level control) See page 76 for the ALC function.	0 dB
GAIN M	Selects the gain value in the GAIN M position of the sensitivity select switch.	–3dB 0dB 6dB 9dB 12dB 18dB ALC (Auto gain level control) See page 76 for the ALC function.	9 dB
GAIN H	Selects the gain value in the GAIN H position of the sensitivity select switch.	–3dB 0dB 6dB 9dB 12dB 18dB ALC (Auto gain level control) See page 76 for the ALC function.	18 dB
SMOOTH TRANS	Smoothens the transition when the GAIN switch ❹ (on page 12), or W.BAL switch ⑫ (on page 13) is switched over and achieves gradual change in place of sudden change. ON ..... Activates the smooth transition function. OFF ..... Deactivates the smooth transition function. The SMOOTH TRANS function is defeated during switching of the LoLux and FAS buttons as well as during switching of the GAIN switch which is assigned to ALC.	ON OFF	OFF
REC TIME	Sets either the remaining tape recording time or TIME CODE to be displayed on the viewfinder screen. TIME CODE ..... TIME CODE is displayed. REMAIN ..... Remaining time is displayed.	TIME CODE REMAIN	REMAIN

10-4 Camera Section ADVANCED MENU Screen (Cont'd)

Item	Function, Operation	Variation Range	Initial Setting
ZEBRA	Switches the brightness level of the object section where the zebra pattern is displayed. 70-80% ..... Zebra pattern is displayed in sections with brightness levels between 70% and 80%. 85-95% ..... Zebra pattern is displayed in sections with brightness levels between 85% and 90%. OVER 95% ..... Zebra pattern is displayed in sections with brightness levels over 95%. OVER 100% ..... Zebra pattern is displayed in sections with brightness levels over 100%.	70 – 80%, 85 – 95% OVER 95% OVER100%	70 – 80%
LENS TRIGGER	Changes the lens trigger setting according to the lens in use. MOMENTARY ..... Compatible with momentary (non-lock type) triggering. Mainly used with lenses using the 12-pin connector. ALTERNATE ..... Compatible with alternate (lock type) triggering. Mainly used with lenses using the 8-pin connector.	MOMENTARY ALTERNATE	MOMENTARY

PROCESS SCREEN

1. The set values can be changed with the UP or DOWN button.
2. After setting, press the MENU button to return to the ADVANCE MENU screen.
3. In case to register the set value in the FILE A or FILE B, select "3 SCENE FILE" with the ITEM button and press the SET button.

Item	Function, Operation	Variation Range	Initial Setting
GAMMA	Correction of the gamma curve to decide the replay ability of black color. • To enhance the black color replayed, however, halftones will be lost for white section ..... Increase the number (UP) • To attenuate the black color replayed ..... Decrease the number (DOWN) **Note :** • During the LOLUX operation, " FIX" is displayed because GAMMA is fixed at the MIN value. • When GAIN is set to 18 dB, "FIX" is displayed because GAMMA is fixed at the MIN value.	MAX 7 18 step to (including OFF) NORMAL to –7 MIN OFF	NORMAL
DTL. V/H BAL	Sets the direction, horizontal (H) or vertical (V), in which stronger detail enhancement is applied. • To strengthen the H enhancement ..... Increase the number (UP). • To strengthen the V enhancement ..... Decrease the number (DOWN).	H-MAX (4) 3 to 9 step NORMAL to –3 H-MIN (–4)	NORMAL
DTL. FREQUENCY	Varies the detail enhancement level by changing the contour frequency emphasis. The setting depends on the subject: • HIGH ..... Applies strong detail enhancement emphasis. Used to shoot subjects with fine patterns. • MIDDLE ... Applies medium detail enhancement emphasis. • LOW ..... Applies weak detail enhancement emphasis. Used to shoot subjects with large patterns. **Note :** • Contour (detail) enhancement is not provided when the LOLUX circuit is activated.	HIGH MIDDLE LOW	LOW

10-4 Camera Section ADVANCED MENU Screen (Cont'd)

Item	Function, Operation	Variation Range	Initial Setting
COLOR MATRIX	Sets the color matrix • ON ..... The color replayed is enhanced, but noise increases. • OFF ..... Deactivates the color matrix function **Note :** • When the GAIN value exceeds +15 dB, the color matrix does not function even in the ON position. • During the LOLUX operation, COLOR MATRIX is fixed to the OFF setting and " FIX " is displayed.	ON OFF	ON

MIC POWER [U-ver.]

Item	Function, Operation	Variation Range	Initial Setting
DA2 +48 V	Sets the supplied voltage of 48V to the DA2 terminal that is located on the front panel of this unit. ON ..... 48 V is supplied. OFF ..... 48 V is not supplied.	ON OFF	ON

MIC POWER [E-ver.]

Item	Function, Operation	Variation Range	Initial Setting
MIC2 +48 V	Sets the supplied voltage of 48V to the MIC2 terminal that is located on the front panel of this unit. ON ..... 48 V is supplied. OFF ..... 48 V is not supplied.	ON OFF	ON

10-5 Resetting Setup Data

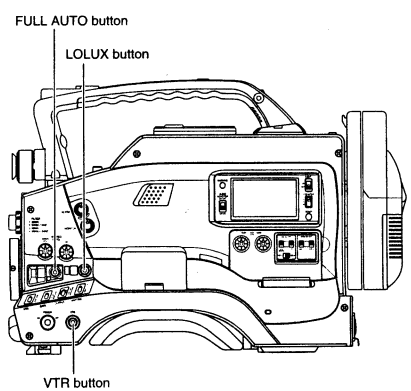

Resetting the FILE data

Data registered in the FILE A or FILE B areas can be cleared to restore the initial setting value.

<How to reset FILE A>
While pressing the **FULL AUTO** button, turn the power ON.

<How to reset FILE B>
While pressing the **LOLUX** button, turn the power ON.

<How to reset FILE OFF>
While pressing the **VTR** button, turn the power ON.

10-5 Resetting Setup Data (Cont'd)

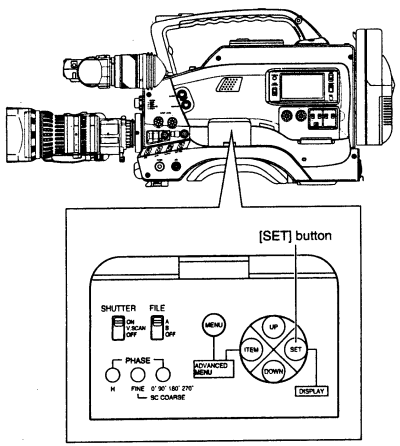

System Reset

Data registered for all setting items can be cleared to restore the initial setting values.

Note:

The mechanical switch positions are not cleared.

How to reset the system

While pressing the SET button, turn the power ON.

System Reset Items and Initial Setting Values

Item	Initial Setting Value
SHUTTER	1/100 [U-ver.], 1/120 [E-ver.]
V.SCAN	1/100.2 [U-ver.], 1/120.1 [E-ver.]
STATUS SCREEN	STATUS 0
LOLUX	OFF
FULL AUTO	OFF
DETAIL	NORMAL
MASTER BLACK	NORMAL
IRIS	NORMAL
ASPECT RATIO	16 : 9
V.RESOLUTION	NORMAL
BACK TALLY	ON
F.NO DISPLAY	ON
AUDIO DISPLAY	ON
SAFETY ZONE	OFF
DA2 +48 V	ON

Item		Initial Setting Value
SCENE FILE	FAW	NONE
	GAIN L	0dB
	GAIN M	9dB
	GAIN H	18dB
	SMOOTH TRANS	OFF
	REC TIME	RENAIN
	ZEBRA	70-80%
	LENS TRIGGER	MOMENTARY
	GAMMA	NORMAL
	DTL.V/H BAL	NORMAL
	DTL.FREQUENCY	LOW
	COLOR MATRIX	ON

11. FEATURES OF THE CAMERA SECTION

11-1 Full-Time Auto White Balance (FAW)

```
---OPERATION---
SCENE FILE A
FAW          :NONE
GAIN L       :0dB
GAIN M       :9dB
GAIN H       :18dB
SMOOTH TRANS :OFF
REC TIME     :REMAIN
ZEBRA        :70-80%
LENS TRIGGER :MOMENTARY
```

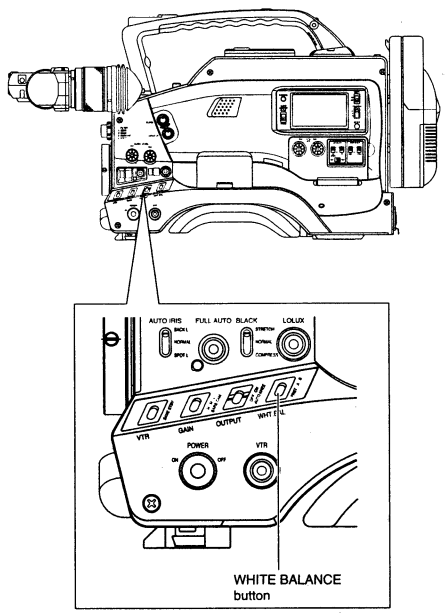

The FAW function adjusts the white balance value automatically as the lighting condition changes.
This mode is convenient when you have no time to adjust the white balance or when the camera is moved frequently in and out of places under different lighting conditions.

■ Setting procedure

The FAW function can be activated with item "FAW" on the Advanced Menu.
This item allows setting of the FAW function to one of the white balance switches, A, B or PRESET. Select "NONE" if the FAW function is not required.
See page 69.

CAUTION :

The FAW(Full-time Auto White balance) function cannot provide optimum white balance with an object outside the FAW adjustment range, for example when it contains only a single color or not enough white color.

11-2 IRIS (Brightness) Adjustment

LENS IRIS ADJUSTMENT

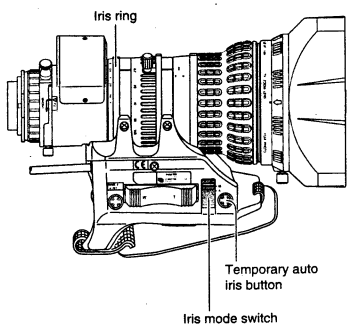

The lens iris can be adjusted by any of the following three methods.

- Automatic adjustment
  Set the iris mode switch to "A (Auto)".
  The iris is adjusted automatically according to the brightness of the object.
- Manual adjustment
  Set the iris mode switch to "M (Manual)".
  The iris can be adjusted manually by rotating the iris ring.
- Temporary auto iris adjustment
  When this button is pressed during manual iris adjustment, the auto iris adjustment mode is activated only while this button is held depressed.

■ Changing the auto iris adjustment setup

Under special lighting conditions such as back-light condition, it is often suitable to change the value set by the auto iris adjustment.
This can be done by any of the following methods.

- Setting the AUTO IRIS LEVEL switch of the camera head (See page 77.)
- Setting item "IRIS" in the Main menu screen. (See page 66.)

ZEBRA PATTERN DISPLAY DURING MANUAL ADJUSTMENT

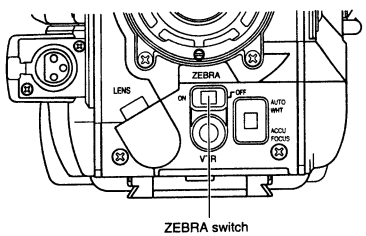

By setting the ZEBRA switch to ON, oblique stripes (zebra pattern) can be displayed in the sections with signal levels of 70% to 80% on the viewfinder screen.
The zebra pattern can be used as a reference for manual iris adjustment.
When adjusting the iris manually, adjust it so that the zebra patterns are displayed in the section which you want to stress in the object.

- The initial setting is 70 to 80%. However, with the "ZEBRA" setting on the ADVANCE MENU, zebra patterns can be displayed in the section of 85 to 95%, over 95% and over 100% in brightness level. (See page 70)

11-3 Shooting the Screen Image on the Computer Monitor

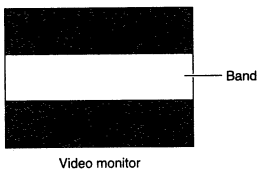

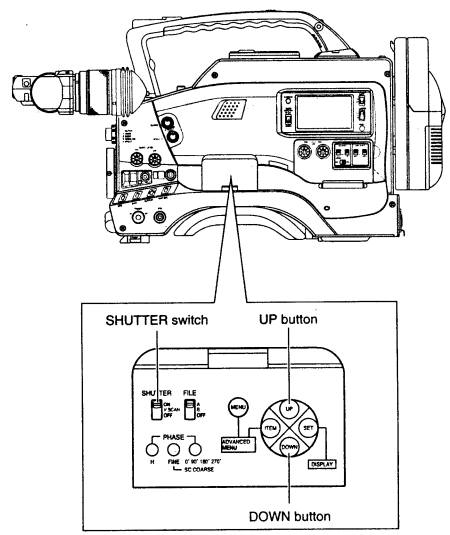

■ Outline

- The following operation allows the alignment of the shutter speed of the camera with the variable scanning rate of the computer monitor or display.
- When a computer monitor or display is shot with the camera, a bright horizontal line indicating excessive exposure is displayed in cases when the scanning rate of the monitor is faster than the shutter speed of the camera or a dark horizontal line indicating insufficient exposure is displayed in cases when the monitor's scanning rate is slower than the camera's shutter speed.
- The scanning frequency of the monitor is variable due to various reasons during the computer operation. Adjust the scanning rate so as to obtain a stable image while observing the image on the viewfinder screen.

■ Variable Scan [V.SCAN]

• Basic operation

Set the SHUTTER switch to the center position (V.SCAN) then adjust the shutter speed with the UP or DOWN button. (The speed is displayed on the viewfinder screen.)

• Compatible frequencies

The variable scan function is compatible with the scanning frequencies in the following range:
60.1 to 2067.0 Hz [U-ver.]
50.1 to 2053.6 Hz [E-ver.]

- If the SHUTTER switch has already been set to ON or V.SCAN, press the UP or DOWN button to display the shutter speed, then press the same button again to change the displayed speed.

11-4 Gain (Sensitivity) Adjustment

The gain should be switched when the brightness is not enough due to the poor lighting condition.

GAIN SWITCHING

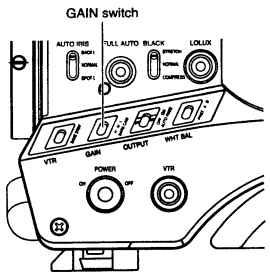

This switch allows the gain to be boosted when the illumination of the object is insufficient.

Switch Position	Factory-Set Gain
L	0 dB
M	9 dB
H	18 dB

When this is switched, the newly set gain is displayed for a few seconds on the status 0 or mode 1 screen inside the viewfinder. Set it to L (0 dB) in normal use.

- The gain set with each of the switch positions can be set with "GAIN" of the ADVANCED MENU.
  See page 69 for details.
- It is also possible to use the ALC which varies the gain automatically.
  See page 69 for details.
- Smooth gain transition
  The gain transition can be made smoother using "SMOOTH TRANS" of the ADVANCED MENU.
  However, note that the SMOOTH TRANS function is not available if the switch is set to ALC.

Note :

CAUTION FOR THE GAIN SETTING

- When the GAIN is set to 18dB, GAMMA is fixed at the MIN and "FIX " is displayed on the GAMMA item of the Advanced menu screen.
- If the illumination is insufficient when GAIN is set to the ALC, the sensitivity is increased automatically. However, in order to make the screen look brighter, the noise is increased a little with the ALC (Auto Level Control) function compared to that when the sensitivity is increased manually.

GAIN BOOST UNDER LOLUX CONDITION

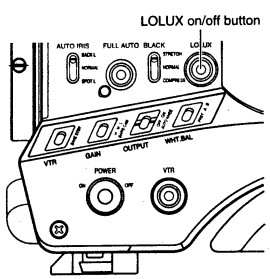

The LOLUX on/off button is designed to be used when insufficient illumination cannot be compensated for with the GAIN switch alone.
Press the button to enter the LOLUX mode in which the gain is boosted by about 33 dB.
"LOLUX ON" is displayed for a few seconds on the status 0 or 1 mode screen inside the viewfinder.
Pressing the button again cancels the LOLUX mode.
"LOLUX OFF" is displayed for a few seconds.

- When the LOLUX is in use, the image definition on the screen will degrade to increase residual images, but it is not a malfunction.

[Relationship between gain, iris and shutter]

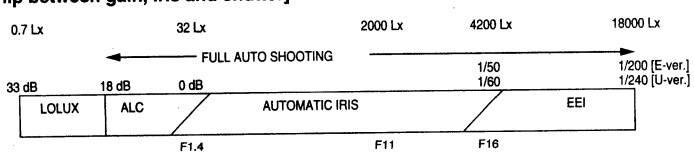

11-5 Switch Setup According to Illumination and Object

SWITCH FUNCTIONS

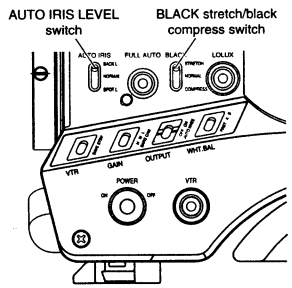

AUTO IRIS LEVEL switch
This switch allows changing of the reference value for the auto iris adjustment according to the lighting condition.
BACK. L : When the object is in the back-light condition. Sets the Auto Iris reference value to a value which is about 1 step wider than the standard setting.
NORMAL : Normal lighting condition.
SPOT. L : When the object is under a spotlight. Sets the Auto Iris reference value to a value which is about 1 step narrower than the standard setting.

BLACK stretch/black compress switch
On the black screen, this switch makes the image easier to see by varying the black gain.
BLACK STRETCH : Boosts the black gain to improve the reproducibility of black color.
NORMAL : Normal black gain.
BLACK COMPRESS : Attenuates the black gain to make the image sharper.

FULL AUTO SHOOTING (FAS) FUNCTION

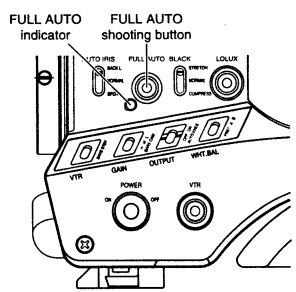

The FAS function provides a wide range of compatibility with shooting conditions which varies as you move between indoors and outdoors or between bright and dark locations. It is not necessary to change the switch and filter positions every time you move.
The FAS function provides an integrated control of the ALC (Automatic Level Control), Auto iris and FAW (Full-time Auto White balance) functions.

■ Operation

1. Simply press the FULL AUTO button to enter the FAS mode, in which the FULL AUTO indicator lights and "FAS" is displayed on the right of the viewfinder screen.
2. Pressing the FULL AUTO button again cancels the FAS mode and turns the FULL AUTO indicator off.

■ Automatic Setting Contents

- If you have been displaying the color bars, the screen is switched automatically to the camera image.
- The auto iris adjustment mode is entered even if the iris mode switch of the lens is set to Manual.
- The GAIN switch and WHT.BAL switch settings are defeated in the FAS mode.
- The LOLUX button setting is active even in the FAS mode. However, the ALC and EEI are defeated in the LOLUX mode, in which only the auto iris adjustment and FAW are used.
- All of the previous setting contents are recalled when the FAS mode is canceled.
- The SMOOTH TRANS function is defeated during switching by the FAS function.

Note:

- When the power is switched ON in the FAS mode, it will take approximately 10 seconds for the FAS to complete automatic adjustment.
  Do not perform any recording during these few seconds.
- During FAS mode, the audio recording level is not set automatically to the AUTO mode.
  This is set according to the AUTO/MANUAL switch of the VCR section.

11-6 Set Up Box Operation

When the set up box is used, the data registered in the FILE (A, B or OFF) memory can be written to be recalled later.

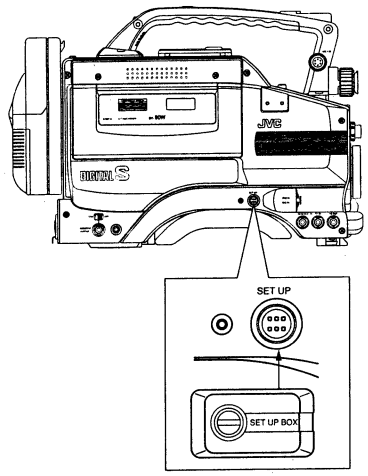

<Attaching>

Insert the set up box as shown in the figure and tighten the screw (regardless of the power being ON or OFF).

<Writing>

The setting data in the FILE can be written onto the set up box.

1. Select the FILE to be written.
Depending on the FILE switch setting, operation differs as follows:
- A : Menu switch data registered in FILE A of this unit is written onto FILE A of the set up box.
- B : Menu switch data registered in FILE B of this unit is written onto FILE B of the set up box.
- OFF : Menu switch data registered in FILE OFF of this unit is written onto FILE OFF of the set up box.

2. In the normal screen, press the MENU button to display the MENU screen in the viewfinder.

3. Using the ITEM button, move the cursor (▷) to the SET UP BOX OPERATE item and press the SET button.
The SET UP BOX OPERATE screen appears and the FILE which is set at procedure "*1.*" is displayed. (A, B, OFF)

4. Using the ITEM button, move the cursor (▷) to the DATA WRITE item and press the SET button.
"DATA WRITE OK?" is displayed.
To cancel writing, press the MENU button.

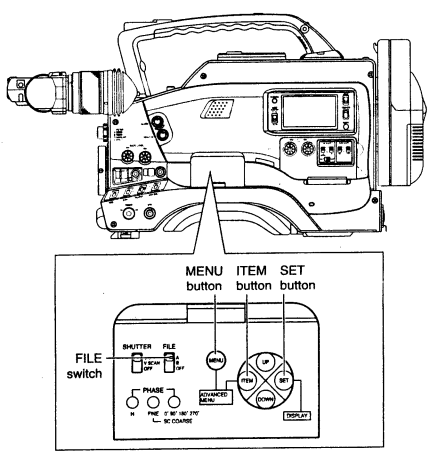

5. To write the data, press the SET button.
The data of this unit is written onto the set up box and "WRITE OK" is displayed.
To write another FILE data, repeat the operations in steps 1 to 5.

6. After writing is finished, press the MENU button to return to the MENU screen.
Press the MENU button again to restore the normal screen.

Note:
When the FILE is switched to OFF during SET UP BOX OPERATE, the SCENE FILE OFF is displayed. Reading and writing of data are not carried out even if the SET button is pressed at the DATA READ/DATA WRITE item. FILE CHECK is displayed on the screen.

```
-SET UP BOX OPERATE-
SCENE FILE OFF
DATA READ
▷DATA WRITE

FILE CHECK
```

2
```
---MENU---
SCENE FILE A
DETAIL          :NORMAL
MASTER BLACK    :NORMAL
IRIS            :NORMAL
ASPECT RATIO    :16:9
V.RESOLUTION    :NORMAL
BACK TALLY      :ON
F NO.DISPLA     :ON
AUDIO DISPLAY   :ON
SAFETY ZONE     :OFF
▷SET UP BOX OPERATE..
```

3
```
-SET UP BOX OPERATE-
SCENE FILE A
DATA READ
▷DATA WRITE

PUSH SET BUTTON
```

4
```
-SET UP BOX OPERATE-
SCENE FILE A
DATA READ
▷DATA WRITE OK?

PUSH SET BUTTON
```

5
```
-SET UP BOX OPERATE-
SCENE FILE A
DATA READ
▷DATA WRITE OK?

WRITE OK
```


11-6 Set Up Box Operation (Cont'd)

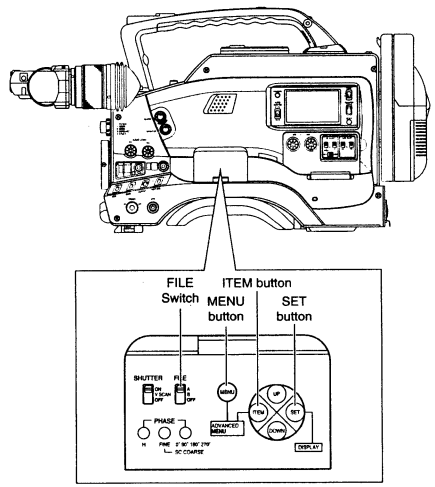

<Read Out>

The data in the set up box can be read out and written onto this unit.

1. Select the required FILE.
Depending on the FILE switch setting, operation differs as follows:
- A : Menu switch data in FILE A of set up box is read out and written onto FILE A of this unit.
- B : Menu switch data in FILE B of set up box is read out and written onto FILE B of this unit.
- OFF : Menu switch data in FILE OFF of set up box is read out and written onto FILE OFF of this unit.

2. In the normal screen, press the MENU button to display the MENU screen in the viewfinder.

3. Using the ITEM button, move the cursor (▷) to the SET UP BOX OPERATE item and press the SET button.
The SET UP BOX OPERATE screen appears.

4. Using the ITEM button, move the cursor (▷) to the DATA READ item and press the SET button.
"DATA READ OK?" is displayed.
To cancel reading, press the MENU button.

5. To read out the data, press the SET button.
The data of the set up box is read out and written into the unit, then "READ OK" is displayed.
To read out another FILE data, repeat the operation in steps 1 to 5.

6. After reading is finished, press the MENU button to return to the MENU screen.
Press the MENU button again to restore the normal screen.

Note:
When the FILE is switched to OFF during SET UP BOX OPERATE, the SCENE FILE OFF is displayed. Reading and writing of data are not carried out even if the SET button is pressed at the DATA READ/DATA WRITE item. FILE CHECK is displayed on the screen.

2
```
---MENU---
SCENE FILE A
DETAIL          :NORMAL
MASTER BLACK    :NORMAL
IRIS            :NORMAL
ASPECT RATIO    :16:9
V.RESOLUTION    :NORMAL
BACK TALLY      :ON
F NO.DISPLA     :ON
AUDIO DISPLAY   :ON
SAFETY ZONE     :OFF
▷SET UP BOX OPERATE..
```

3
```
-SET UP BOX OPERATE-
SCENE FILE A
▷DATA READ
DATA WRITE

PUSH SET BUTTON
```

4
```
-SET UP BOX OPERATE-
SCENE FILE A
▷DATA READ OK?
DATA WRITE

PUSH SET BUTTON
```

5
```
-SET UP BOX OPERATE-
SCENE FILE A
▷DATA READ OK?
DATA WRITE

READ OK
```

12. OTHERS

12-1 Connection with a Switcher

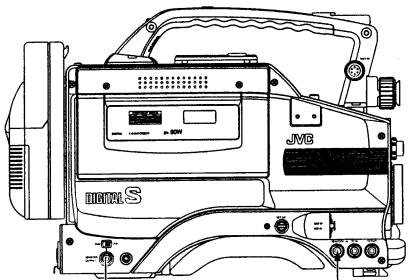

Genlocking is a function which synchronizes the video output signal of the camera with another component including a camera and switcher. The phases of the camera signal can be adjusted relatively with reference to the black burst or composite video signal. The camera is genlocked through the genlock input connector or the remote control unit.

Note :

When the power is switched ON while external sync signal is input, the screen moves in a vertical direction for a few seconds. This is not a malfunction.

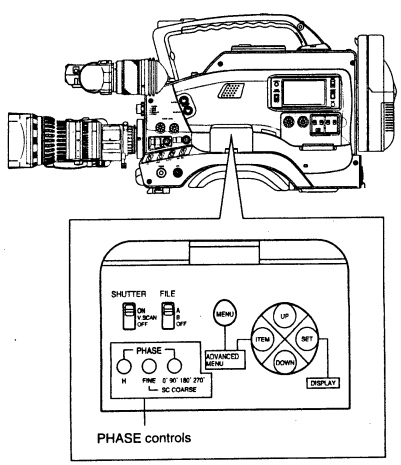

• Phase Adjustment

Two phase controls are provided for use in adjusting the horizontal and the color phases.

H : Horizontal sync phase control for use in adjusting the H phase so that the reference signal and the video output signals are coincident in terms of position and time on the screen.

SC COARSE : A rough adjustment of the sub carrier (SC) can be made while observing a vector scope. (0°,90°, 180°, 270°)

SC FINE : A fine adjustment can be made.
If sufficient adjustment cannot be made, switch the SC COARSE and try the SC FINE adjustment again.

- The adjustments require the use of external measuring instruments such as a waveform monitor, oscilloscope and vector scope.
  As the signal phase is unstable for a moment after the power of each piece of equipment is turned on, wait a while before starting the phase adjustment.

CAUTION :

The camera cannot be genlocked with a VCR playback signal because this may cause a sync error or color phase variation. However, this is not a malfunction but due to the timebase variation in the VCR playback signal that corresponds to the wow and flutter of the audio tape playback signal. If you should use the VCR playback signal as the reference signal, be sure to correct the signal using a timebase corrector or similar equipment.

For servicing
See DY-90W service manual (No. 9375) page 1-24 "1.10 HOW TO DETECT THE ALARM".

12-2 Trouble Shooting

The unit provides warning on troubles in the operating situations using indicators, LCD displays and monitor tones.
The warning consists of the following two kinds of information.

- Alarm indications : These indications are given to provide warning on the VCR situation, for example when the tape or battery pack should be replaced.
- Error code display : In case an error occurs with the VCR operation, the unit applies self-diagnostics of the cases and shows the diagnostics results on the counter display. At the same time as displaying an error code display, the VCR stops operation automatically or ejects the cassette tape.

ALARM INDICATIONS

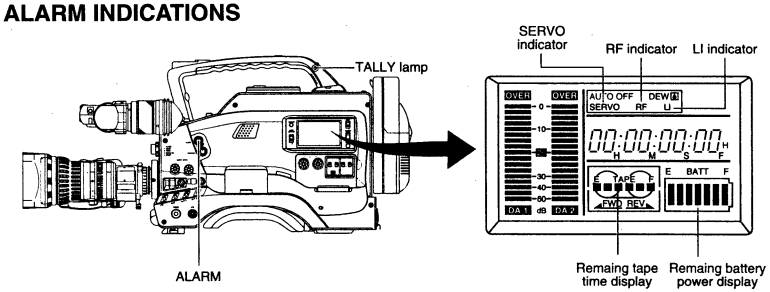

The following chart summarizes the operation of the alarm system.

■ SYMPTOMS

VCR Display Alarm Indicator	Sympton	VCR section Behavior, Treatment
SERVO	Lights in the case the drum servo trouble in recording. Lights when the input video signal is disturbed or the unit is subject to shock. (Displayed only in record mode)	Operation : Continues. Treatment : • Check input video signal. • Signal is disturbed when the unit is subject to a violent shock. In other cases, consult your dealer or nearest JVC-authorized service agent.
RF	Lights in case of video head clog. (Displayed only during back-spacing for record-pause mode.)	Operation : Continues. Treatment : Clean the head with the special head cleaning tape. See page 7.
Li	Lights when lithium battery for time code generator and date/ time data backup is exhausted.	Operation : Continues. Treatment : Replace it with a new lithium battery. See page 34.
Remaining tape time	• Approx. 2 min. before tape end. (Displayed only in record or record-pause mode) The TALLY lamp and alarm tone are activated only in the record mode.	Operation : Continues.
	When tape has ended completely.	Operation : Stops.
Remaining battery power	When the remaining battery power is low.	Operation : Continues. Treatment : Replace battery pack early.
	When the battery power drops to an insufficient level.	Operation: Stops automatically. The camera may supply abnormal signals, when continuing to use a low power battery. This is not a malfunction.

For servicing
See DY-90 service manual (No. 9360R) page 2-6 "2.4.3 Cleaning".

12-2 Trouble Shooting (Cont'd)

ALARM INDICATIONS (Con'd)

■ The LCD Display, WARNING Indicator, TALLY Lamp, Alarm Tone and Viewfinder Act Depending on Situations as Shown in the Following Table.

Alarm Indications				Viewfinder		
LCD Display	WARNING indicator	TALLY lamp	Alarm Tone	Warning Lights: REC Light	Warning Lights: BATT Light	On Screen Display
SERVO indicato	✪	✪	▦▦▦▦	✪	—	VTR WARNING (SERVO)
RF indicator	✪	✪	▦▦▦▦	✪	—	VTR WARNING (HEAD)
LI indicator	—	—	—	—	—	—
Remaining tape time (E TAPE)	◑	◑ (In record mode)	—▦—	◑	—	TAPE NEAR END Approx. 2 min. before tape end.
(E TAPE)	●	✪	▦▦▦▦	✪	—	TAPE END
Remaining battery power (E BATT)	◑	◑ (Except for play/search mode)	—▦—	◑	◑	LOW BATTERY
(E BATT)	●	✪	▦▦▦▦	✪	●	LOW BATTERY

• The alarm tone output is superimposed in the audio signal output from the monitoring loudspeaker or EARPHONE jack. The volume of the alarm tone can be adjusted with the ALARM control.

Display symbols ● : Steady lighting. ◑ : Blinking once per second. ✪ : Blinking 4 times per second.
▦▦▦▦ : Continuous sound. —▦— : Sound interrupted once per second. ▦▦▦▦ : Sound interrupted 4 times per second.

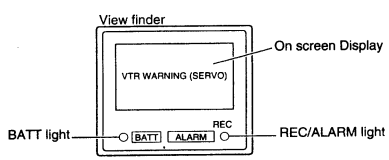

12-2 Trouble Shooting (Cont'd)

WARNING MESSAGE ON VIEWFINDER

■ Viewfinder Warning Lights

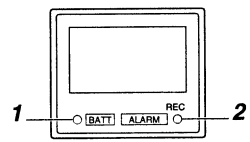

1. BATTERY light
- This blinks red when battery voltage becomes too low for the camera to operate.
- This lights red when the battery has runout.

2. REC/ALARM light
This light shines for these conditions.
Solid Green : • While recording
Blinks Green : • While the VCR prerolls before recording
• If the tape is finishing.
• If the VCR malfunctions.

Automatic warnings :
LOW BATTERY : This blinks when the battery level falls too low.
TAPE NEAR END : There are less than 3 minutes tape remaining.
TAPE END : The tape has run out.

■ Function Failures

When a trouble occurs on the VCR section or a mis-operation is performed, the following warning message will appear in the viewfinder.
- VTR WARNING (HEAD) :
  Lights in case of video head clog.
  (Displayed only during backspace for record-pause mode.)
- VTR WARNING (SERVO) :
  Lights in case drum servo trouble in recording.
- VTR WARNING (DEW) :
  Lights when condensation occurs in the VCR section.
- VTR WARNING (HARD) :
  Lights when a trouble occurs in the VCR section.
  For details of trouble, check the error code indication chart on page 85.
- REC INHIBIT :
  Lights when the VTR trigger button is pressed with an unrecordable cassette tape (with REC switch on the back of the cassette set to OFF) loaded.
- NO TAPE :
  Lights when the VTR trigger button is pressed with no cassette tape loaded.

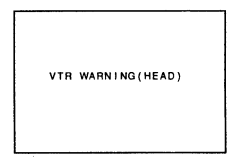

Status 0 or 1 mode

■ White Balance Function

AUTO WHITE A, B
NG : OBJECT : Check whether the object being shot is white enough. Check for proper filter.

AUTO WHITE A, B
ERROR : OVER LIGHT : Check to see if the sun or other bright light is shining in the lens. Check that the IRIS is adjusted properly.

AUTO WHITE A, B
ERROR : LOW LIGHT : Check to see if increasing gain or lighting will help.

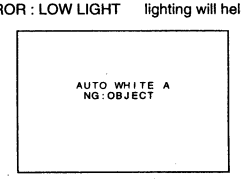

12-2 Trouble Shooting (Cont'd)

TROUBLES WITH ERROR CODE OUTPUTS

In case of trouble during the operation of the VCR, it applies self-diagnostics to identify the cause and displays the result in the form of an error code. The error code consists of the "main code" which indicates its contents and the "sub-code" which indicates the details. At this time, the LCD display, the WARNING indicator and alarm tone also act according to the current VTR situation.
In the viewfinder, the "VTR WARNING (DEW)" message appears when condensation occurs (error code 02:01), and the "VTR WARNING (HARD)" message appears when some of the other error codes are displayed.

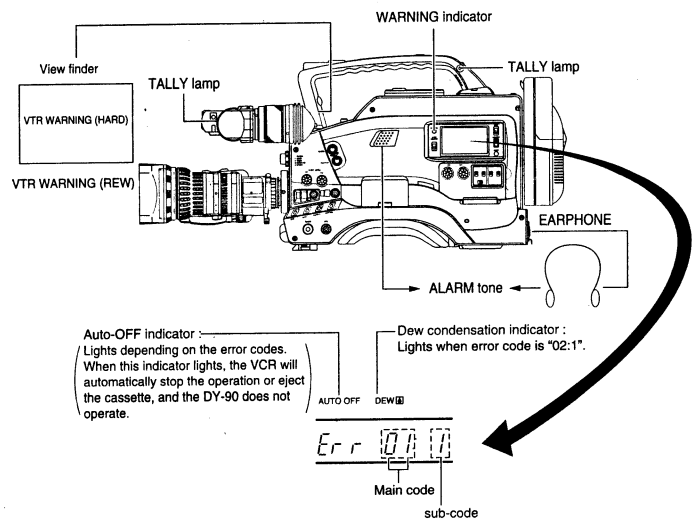

WARNING indicator	Alarm Tone	Display	VCR Operation
Red blinking	Continuous	"Error code"	• Automatically ejects the cassette. It can be inserted again.
		"Error code" plus "AUTO OFF"	• Automatically stops operation or ejects the cassette. (Auto OFF*). "VTR WARNING (HARD)" is displayed on the viewfinder screen. The VCR does not accept any operation.
Red, steady lighting	Intermittent	"02:1" and "DEW"	• Dew is condensed in the VCR. "VTR WARNING (DEW)" is displayed on the viewfinder screen. The VCR does not accept operation until indicators disappear from the display.

★In the Auto OFF status, it is impossible to operate the VCR. This condition can be corrected by switching the POWER off and then switching it ON again. If the same trouble occurs again after the power is turned ON, there may be a failure in the VCR. Please consult your dealer or nearest JVC-authorized service agent.

This unit is microcomputer-controlled equipment, which may malfunction due to external noise or interference. In this case, switch the POWER OFF, remove the lithium backup battery, and switch the POWER ON again after a few minutes.

For servicing
See DY-90W service manual (No. 9375) page 1-25 "1.11 ERROR CODES ".

For servicing
See DY-90W service manual (No. 9375) page 1-25 "1.11 ERROR CODES".

12-2 Trouble Shooting (Cont'd)

TROUBLES WITH ERROR CODE OUTPUTS

Error Code	Error Details	VCR Operation	Treatmer For servicing
01 : 1	Tape sensor LED wire is disconnected	Ejects cassette and does not accept any operation while the error is displayed.	Switch power ON again.
02 : 1	Condensation (dewing)	Does not accept any operation while the error is displayed. When condensation disappears, the indicators turn off.	Leave the unit with the power ON, until "DEW" display disappears.
32 : 1 32 : 2	Tape loading impossible.	Ejects cassette	Insert cassette again.
33 : 1 (AUTO OFF)	Tape unloading impossible.	Stops operation. Does not accept any operation.	Switch the power OFF and then switch it back ON. However, the tape may be damaged depending on the situation. So consult with the JVC authorized service agent.
56 : 3 to 56 : 8	Tape is cut or tape is slack.	Ejects cassette.	Check cassette and insert again if it is OK.
57 : 1 to 57 : 4	Tape end sensor error.	Rewinds tape to confirm. If tape end is detected again, ejects the cassette.	Check cassette and insert again if it is OK.
58 : 1 to 58 : 4	Tape beginning sensor error.	Fast forwards tape to confirm. If tape beginning is detected again, ejects the cassette.	Check cassette and insert again if it is OK.
70 : 1 (AUTO OFF)	Drum rotation stopped.	Stops operation. Does not accept any operation.	Switch the power OFF and then switch it back ON. However, the tape may be damaged depending on the situation. So consult with the JVC authorized service agent.
71 : 1 (AUTO OFF)	Capstan rotation stopped.	Stops operation. Does not accept any operation.	
72 : 1 to 72 : 5 (AUTO OFF)	Supply reel rotation error.	Stops operation. Does not accept any operation.	
72 : 7	Supply reel rotation error due to tightly wound tape.	Ejects cassette.	Check cassette and insert again if it is OK.
73 : 1 to 73 : 4 (AUTO OFF)	Take up reel rotation error.	Stops operation. Does not accept any operation.	Switch the power OFF and then switch it back ON. However, the tape may be damaged depending on the situation. So consult with the JVC authorized service agent.
73 : 7	Take up reel rotation error due to tightly wound tape.	Ejects cassette.	Check cassette and insert again if it is OK.

12-2 Trouble Shooting (Cont'd)

TROUBLES WITHOUT ERROR CODE OUTPUTS

Symptoms	Check points
Power cannot be switched ON.	• Is power supply connected properly? • Is battery pack recharged? • When the lithium battery is depleted, the power should not be turned on.
Recording is not possible.	• Is REC switch of cassette set it to ON? If it is OFF, set to ON.
Cassette is ejected.	• Is the cassette in use a DIGITAL S cassette? VHS or S-VHS cassettes are ejected whenever they are inserted.
Noise interferes with playback video.	• Video head may be clogged with dirt. Clean head with the special head cleaning tape. See page 7.
Time code or date/ time data are not displayed on the monitor screen.	• Time code and date/time data are not displayed on the monitor screen during recording or playback of VCR. The data is shown only on the counter display.
Time code and user's bit data are not displayed on the counter.	• Is TC DISP switch under the side panel cover set to SUB TC? If it is, set the switch to TC.
Remaining battery power display is incorrect.	• The setup menu item "BATT. TYPE SELECT" may not be set correctly according to the type of battery in use. If the menu item setting is wrong, set it correctly by opening setup menu item "BATT. TYPE SELECT".
Battery alarm is displayed and VCR enters OPERATE OFF mode even when a fully charged battery is used.	
Cassette can not eject after the power is turned on.	• The power supply unit's capacity may be insufficient. Check the power voltage. • If the power is turned off within 1 second of opening the cassette holder, the cassette holder may not close properly.
Viewfinder image looks dark or unclear.	• Adjust the contrast control. • Is the filter switch set to 5600K+ND? • Is the iris closed? • Is the shutter speed too fast? • Is the viewfinder cable correctly connected?
Noise appears when playing back a tape recorded with another VCR.	• When the tape recorded on another VCR is played back or used for recording, this phenomenon may occur caused by the tracking shift.
The scene change section is disordered when a tape recorded with another VCR is used.	
VCR section does not operate after loading the cassette.	• Does the cassette indication ([⊡]) in the display light? When the cassette indication is not lit, the cassette cover is in the half-lock condition. Push the cassette cover to the end to securely lock the cassette.
A recording check is not possible with the viewfinder or monitor in the record-pause mode.	• Is the [CAM/VTR] switch set to the CAM position? If so, set it to the VTR position.
Playback image is not output.	
MIC1 or MIC2 sound is not input. [E-Ver.]	• Using the [MIC1•MIC2] microphone select switch, select the mic input to be used.

12-3 Hour Meter Display

The unit can display the running time of the drum as the hour meter data on the counter display.
The hour meter can be displayed by selecting setup menu Group 1.

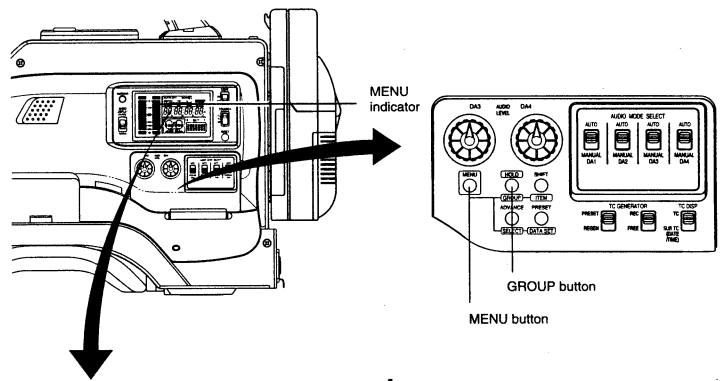

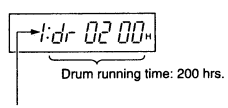

Drum running time: 200 hrs.

Group No.

1. Turn the POWER switch to ON.

2. Press the MENU button to enter the setup menu mode.
The MENU indicator lights on the display and the setup menu is shown on the counter display.

3. Press the GROUP button to display setup menu Group 1.
→ The drum operating hour data is shown on the counter display.

4. Press the MENU button to return to the normal mode.

12-4 Index

A

ACCU FOCUS switch 10
AC power supply 35
ADVANCED MENU 65
ADVANCE/SELECT button 18
ALARM control 13
Alarm indications (display side) 81
Alarm message display (viewfinder) 28
AUDIO indicator 27, 67
AUDIO INPUT SELECT 46
AUDIO LOW CUT SELECT 64
Audio level maters 16
AUDIO MODE SELECT switch 15
AUDIO MONITOR control 13
AUTO IRIS level switch 12, 77
AUTO OFF 84
AUTO WHITE NG, ERROR messages 83
AUTO WHITE switch 10

B

Back focus adjustment 43
BACK. L 12, 77
BACK TALLY 67
BACK TALLY Lamp 19
BARS 13
Basic system 30
Battery holder 21, 36
Battery pack 8, 35
Battery remaining 38
BATTERY VOLTAGE 64
BATT. TYPE SELECT 64
BLACK COMPRESS 13, 77
BLACK STRETCH 13, 77
Blooming 9

C

CAM • AUTO KNEE Switch 13
CAM/VTR Switch 11
Cassette cover 11
Cassette/tape direction/remaining tape time indicators 17
COLOR MATRIX 71
Color temperature conversion filter control knob 10, 41, 44
Condensation 8
Counter display 17
COUNTER switch 16

D

DA1/DA2 REC LEVEL control 13
DA1/DA3 LINE/MIC SELECT switch 20
DA1/DA3 IN connector 21
DA2/DA4 IN connector 10, 11
DA3/DA4 LEVEL control 15
DC INPUT connector (XLR-4 pin) 20, 35
DC OUT connector 20
DETAIL 66
DEW 8, 17, 84
DOWN button 14, 65
Drop frame 56, 64
DRUM HOUR METER 64
DNR LEVEL 71
DTL. FREQ. 70
DTL. V/H BAL 70

E

EARPHONE jack 20
EJECT button 19, 40
ERROR CODE (LED display) 84, 85
Error message (viewfinder) 83
Event display 29
External dimensions 91
External monitor adjustment 42

F

Fast-Forward 54
FF button 19
FILE reset 71
FILE switch 14, 65
F NO. DISPLAY 27, 67
FULL AUTO SHOOTING button 12
Full auto shooting (FAS) 77
Full time auto white (FAW) 44, 69, 73

G

GAIN L/M/H 67, 76
GAIN switch 12
GAMMA 70
GEN LOCK IN 11, 80

H

H PHASE 14, 80
Head cleaning 7
HOLD indicator 17
HOLD/GROUP button 18
HOUR METER 87

I

IRIS 66
ITEM button 14, 65

L

Lens (optional) 23, 31
LENS connector 10
Lens iris adjustment 74
Lens mounting ring 10
LENS TRIGGER 70
LI (Alarm indicator) 17, 81
LIGHT switch 16
LINE OUT connector (XLR - 5 pin) 21
Lithium battery 15, 34
Loading the cassette 40
LOLUX 13, 76
LONG PAUSE TIME SELECT 64

M

Main menu 65
MASTER BLACK 66
MENU button (camera section) 14
MENU button (display side) 18
MENU indicator 17

12-4 Index (Cont'd)

Mic holder mounting screws 11
Microphone (optional) 33
MONITOR OUTPUT connector 11
Monitoring audio 48
Monitoring loudspeaker 15

N

NO TAPE 83
Non-drop frame 56, 64

O

Operating time 38
Operation cover 19
Operation screen 69
Optional accessories 91
OUTPUT 13

P

PB indicator 17
PCM audio 46
Periodical maintenance 7
Phase adjustment 80
Play 19, 53
Power supply 35
POWER switch 12, 39
PRESET/DAT SET button 18
PRESET/REGEN switch 18

R

REC INHIBIT 83
REC level 47
REC TIME 69
REC/FREE run switch 18
Record-Pause (standby) mode 51
Remaining battery power 17, 22, 81, 82
Remaining tape time 22, 81, 82
RESET button 16
Resetting the FILE data 71
REW (Rewind) 19, 54
RF indicator 17, 81, 82

S

SAFETY ZONE 29, 67
SAVE 12, 39
SC COARSE 14, 80
Scene changing point 52
SC FINE 14, 80
SERVO indicator 17, 81, 82
SET UP BOX 11, 67, 78
SET/DISPLAY button 14, 65
SHIFT/ITEM button 18
SHUTTER switch 14
SLAVE indicator 17
Slave-lock 58
Smear 9
SMOOTH TRANS 69
SPOT. L 77
Status screens 25
STBY 12, 39, 51
STOP button 19
Sub-time code 60
SYSTEM reset 72

T

TAPE REMAIN 27, 64
TC DISP switch 18
TC IN, OUT connector 11
Time code 17, 56
Tripod base 32
TROUBLE SHOOTING 81

U

U-BIT SLAVE ON/OFF 64
Unloading the cassette 40
UP button 14, 65
User's bit 56

V

Variable scan (V. SCAN) 14, 75
VCR display 27
VCR setup menu 62
VF connector 10
Video cassette 8
Viewfinder (optional) 24, 31
Viewfinder mount base 10
Viewfinder screen display 25
Viewfinder warning 83
Voltage display 27
V. RESOLUTION 66
VTR SAVE, STBY 51
VTR switch 12
VTR trigger button 10, 12
VTR WARNING 83

W

WARNING indicator 16
Warning indicator inside the viewfinder 25
White balance adjustment 13, 44

Z

ZEBRA 10, 70, 74

12-5 Specifications

• CAMERA SECTION

Image pickup device	: 2/3-inch interline CCDs
Color separation optical system	: 3-color separation prism
Number of effective pixels	: 480,000 pixels (980 (H) × 494 (V)): U-ver. 570,000 pixels (980 (H) × 582 (V)): E-ver.
Color system	: NTSC (R-Y, B-Y encoder) PAL (R-Y, B-Y encoder)
Color bars	: SMPTE color bar: U-ver. EBU colour bar: E-ver.
Sync system	: Internal sync External sync (VBS or BB)
Lens mount	: Bayonet system (FB 48.0 mm, 2/3" CCD cameras)
Optical filter [U-ver.]	: 3200 K, 5600 K, 5600 K + 1/16ND, 3200 K + Efect (cross) filter
Optical filter [E-ver.]	: 3200 K, 5600 K, 5600 K + 1/8ND, 5600 K + 1/64ND
Sensitivity	: F11, 2000 lx
Resolution	: 500 lines (4:3), 375 lines (16:9)
Gain	: –3, 0, 6, 9, 12, 18 dB, LOLUX, ALC
Minimum illumination	: 4 lx with F1.4, +18 dB gain
Lolux minimum illumination	: 0.75 lx with F1.4
Registration	: 0.05% or less (excluding lens distortion)
Contour correction	: Horizontal dual-edged, Vertical 2 H
Shutter speed [U-ver.]	: 100, 250, 500, 1000, 2000 Hz
Shutter speed[E-ver.]	: 120, 250, 500, 1000, 2000 Hz
V.SCAN speed [U-ver.]	: 60.1 Hz to 2067.0 Hz
V.SCAN speed [E-ver.]	: 50.1 Hz to 2053.6 Hz

• VCR SECTION

Format	: DIGITAL S
Tape width	: 12.65 mm
Tape speed	: 57.737 mm/sec: U-ver. 57.795 mm/sec: E-ver.
Record/Play time	: 104 minutes (With a DS-104 cassette)
F.F/rewind time	: Approx. 4 minutes (With a DS-64)
[VIDEO]	
Frequency response	: Y : 0 to 5.0 MHz R-Y/B-Y : 0 to 2.0 MHz
Sampling frequencies	: Y : 13.5 MHz R-Y/B-Y : 6.75 MHz
Quantization	: 8-bit
S/N	: More than 52 dB (during BR-D80/D50 reproduction with component output)
[AUDIO]	
Number of channels for recording	: PCM × 4, cue track × 2
Sampling frequency	: 48 kHz
Quantization	: 16-bit
Frequency response	: 20 Hz to 20 kHz (PCM)
Dynamic range	: More than 85 dB (PCM) (during BR-D80/D50 reproduction)
Wow & flutter	: Under measurable limit
[Time Code System]	
Time code signal	: Compliance with SMPTE standard: U-ver. Compliance with EBU standard: E-ver.
LTC input	: 0 ± 6dBs, high impedance, unbalanced
LTC output	: 0 ± 6dBs, low impedance, unbalanced

• INPUT/OUTPUT SIGNALS

Video signal output	: 1 V (p-p), 75 Ω (BNC) (Composite video signal)
Lens	: 12-pin connector
DA4 (MIC 1) input: U-ver.	: –52 dBs, unbalanced, 6-pin
DA2 (MIC) input: U-ver.	: –60 dBs, balanced, +48 V XLR-3-pin
DA1/DA3 input: U-ver.	: +4 dBs/10 kΩ (select the switch) –60 dBs/3 kΩ (select the switch) +48 V (ON/OFF switch) (XLR3), balanced
MIC 1 input: E-ver.	: –52 dBs, unbalanced, 6-pin
MIC 2 input: E-ver.	: –60 dBs, balanced, +48 V XLR-3-pin
AUD 1/AUD 2 input: E-ver.	: +4 dBs/10 kΩ (select the switch) –60 dBs/3 kΩ (select the switch) +48 V (ON/OFF switch) (XLR3), balanced
Audio output	: 0 dBs, low impedance, (XLR5), balanced
Earphone output	: –60 to –17 dBs, at 8 Ω load
DC input	: 12 VDC⎓ (11 to 15 VDC⎓)
Auxiliary power output	: 12 VDC⎓ : max. 0.1A (11 to 15 VDC⎓)

• GENERAL

Power consumption	: 36W with VF-P116W (Max) 30W with VF-P116W (when recording) 12VDC ⎓ 3A with VF-P116W (Max) 12 VDC⎓ 2.45A with VF-P116W (when recording)
Mass	: Approx. 5.7 kg (including VF-P116W) Approx. 4.8 kg (main unit only)
Operating temperatures	: 0 °C to 40 °C
Operating humidty	: 30 % to 80 % RH
Storage temperatures	: –20 °C to 60 °C

• ACCESSORIES

Tripod base	: × 1
Set up box	: × 1
Lithum battery	: × 1 (CR2032)
Instructions	: × 1
Warranty Card	: × 1
Label (for Tape)	: × 10

OPTIONAL ACCESSORIES

Viewfinder	: VF-P116W
Power zoom lens	: A19 × 8.7BW, A19 × 8.7B12, YJ18× 9BK12
AC power adapter	: AA-P250, AA-G10
DC battery pack	: NB-G1 (12 V, 2.2 AH)
Microphone	: MV-P615, MV-P616, MV-P612
Mic holder	: KA-A90

12-5 Specifications (Cont'd)

EXTERNAL DIMENSIONS (unit : mm) [U-ver.]

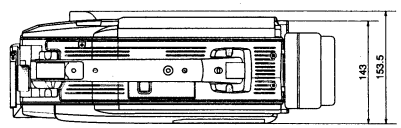

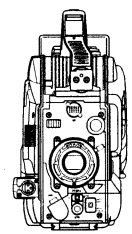

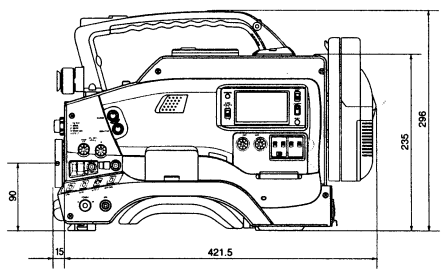

EXTERNAL DIMENSIONS (unit : mm) [E-ver.]

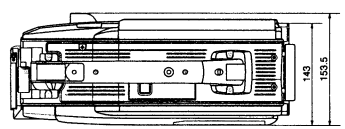

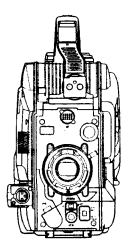

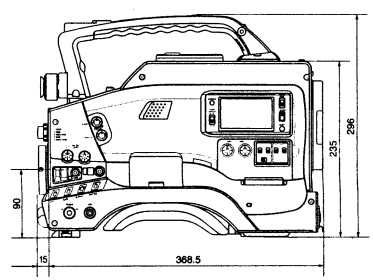

Design and specifications are subject to change without notice.

SECTION 1
SERVICE CAUTIONS AND DISASSEMBLY

1.1 RESET OF POWER BREAKER

This set is equipped with a power breaker for protecting circuits from overcurrent instead of power fuses.
To reconnect the power, reset the power breaker.

Note: When the power breaker is activated to cut off the power, make sure to investigate the cause and repair the failure before resetting it in order to avoid expansion of the failure.

1. Turn off not only the OPERATE switch of this set but also all the power switches of other devices that supply power to this set.
2. The power breaker Ⓐ is located at the rear bottom of the VTR section. Pressing the BREAKER button reconnects the power.

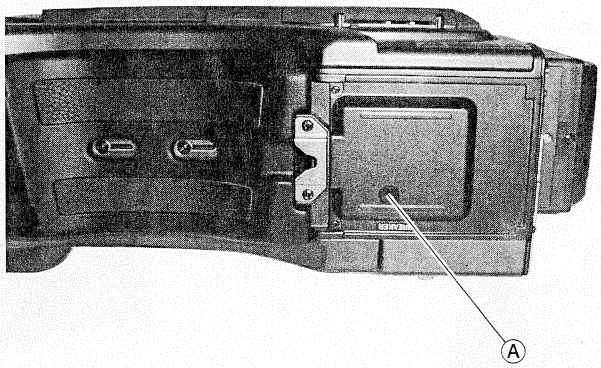

Fig. 1-1 Fuse circuit protectors layout diagram

1.2 HOW TO REMOVE THE OUTER CASE

1.2.1 How to remove the cassette cover

(1) Remove two screws ①.
(2) Slide the cassette cover in the arrow direction in order to remove it.

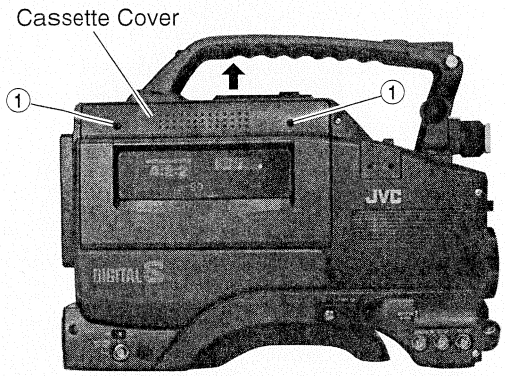

Fig. 1-2-1 How to remove cassette cover

1.2.2 How to remove the left side cover

(1) Remove the cassette cover.(refer to the subsection 1.2.1)
(2) Loosen the screw ② to remove the set up box.
(3) Loosen the five screws ③ to remove the left side cover.

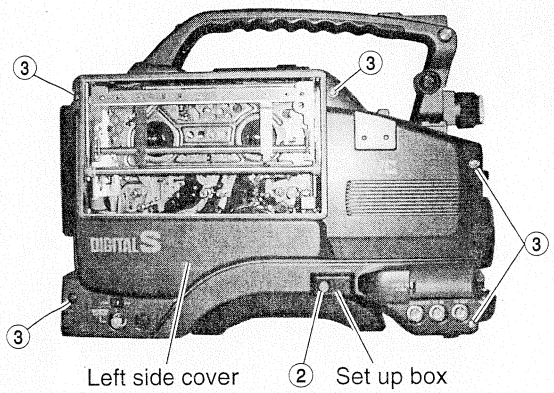

Fig. 1-2-2 (1) How to remove the left side cover

(4) Disconnect the connector Ⓐ.

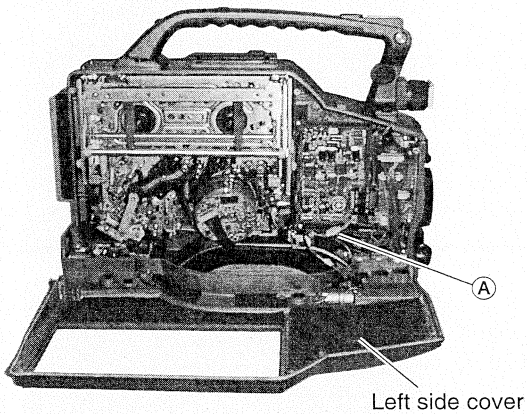

Fig. 1-2-2 (2) How to remove the left side cover

1.2.3 How to open the right side cover

(1) Loosen the five screws ④.

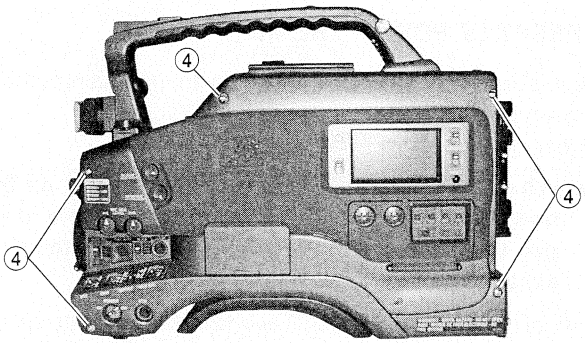

Fig.1-2-3 (1) How to open the right side cover.

(2) Open the right side cover towards the front.

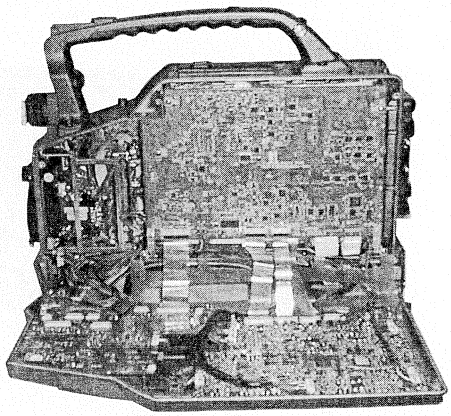

Fig.1-2-3 (2) Diagram with the right side cover open

1.2.4 How to remove the bottom cover

(1) Remove the four screws ⑤ to remove the bottom cover.

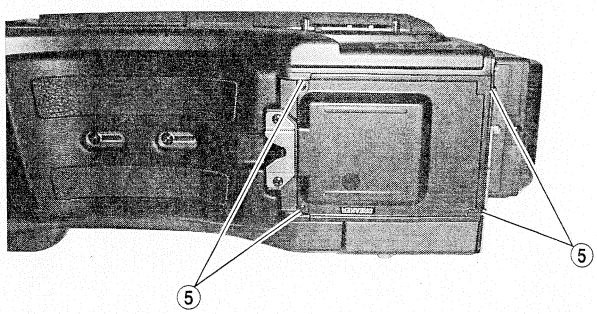

Fig.1-2-4 How to remove the bottom cover

1.3 HOW TO MAKE A DIAGNOSTICS OF THE BOARD

1.3.1 Main board layout diagram

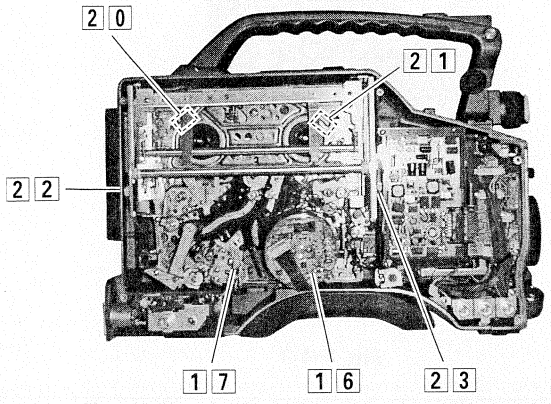

Left side

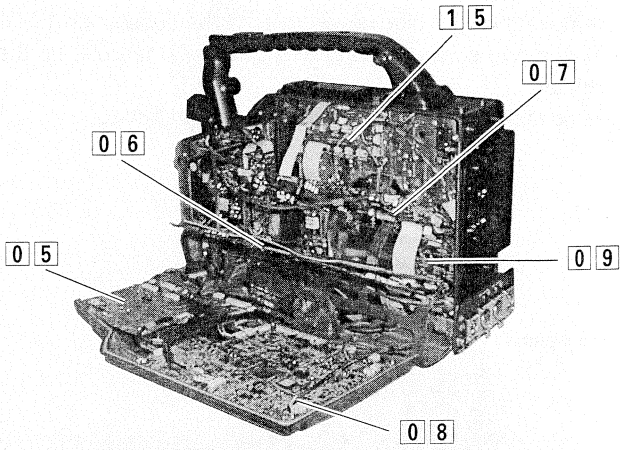

Right side

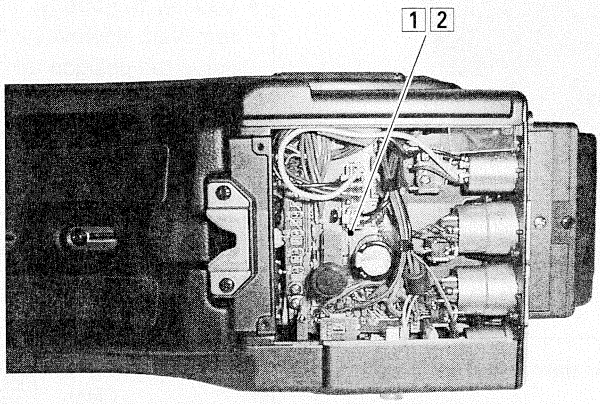

Bottom side (connector box)

Board name	Board layout position	Remarks
01 DR 02 03 04 ISB/G/R	Camera Head	Section 1.5.1
05 CP 08 AUDIO/LCD	On the right side cover	Section 1.5.2 Section 1.6.1
06 MAIN 07 SS/RFP 09 PR 14 OPERATION 15 MEC/IF	On the side of right side cover	Section 1.6.2 Section 1.6.3 Section 1.6.4
16 MDA 17 A/C HEAD 18 MODE SENS 19 AL SENS 20 TU REEL FG 21 SP REEL FG 22 BEGIN SENS 23 END SENS	On the side of the left side cover	
12 I/O JUNC	Inside the connector box	Section 1.6.4

Fig.1-3-1 Main Board layout diagram

1.4 REMOVING THE OPTICAL FILTER ASSEMBLY AND OPTICAL BLOCK ASSEMBLY

(1) Remove the right side cover (refer to the subsection 1.2.3)
(2) Loosen two screws ⑥ and two screws ⑦ then lift up the handle.
(3) Remove the four screws ⑧ from the front panel.

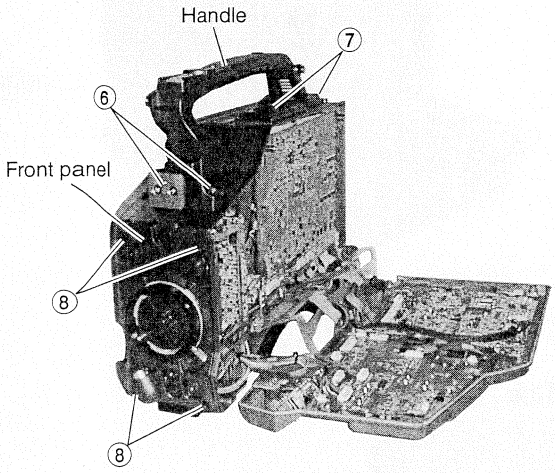

Fig. 1-4-1

(4) Pull out the optical block assembly together with the front panel gently toward the front.

> **NOTE**
> **Be very careful not to scratch or damage the circuit boards and flat cables.**

(5) Loosen the two screws ⑨.
(6) Take out the optical filter assembly in the direction of the arrow.

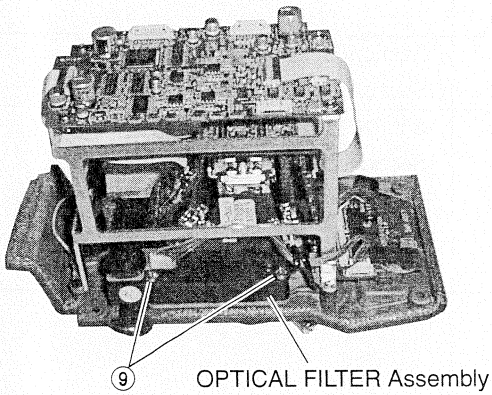

Fig. 1-4-2

(7) Disconnect the three connectors Ⓑ, Ⓒ and Ⓓ direction in order to remove the flexible wires.
(8) Remove the four screws ⑩ then remove the DR board.

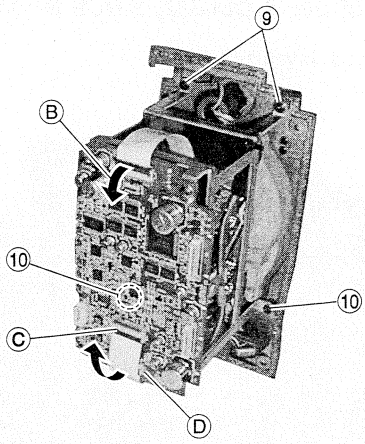

Fig. 1-4-3

- Usually, the optical filter assembly does not need to be removed. However, when it is removed then attached, observe the position relationship between the filters and filter shaft as shown in Fig. 1-4-4.

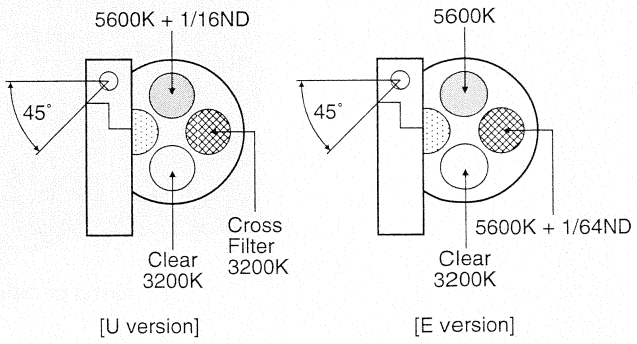

Fig. 1-4-4 Position Relationship Between Filters and Filter Shaft

(9) Remove the four screws ⑪ from the front panel, and separate the front panel from the optical block assembly.

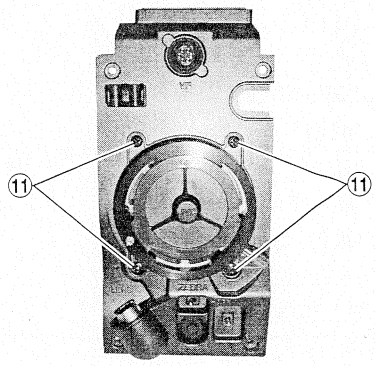

Fig. 1-4-5

NOTES

- **The CCDs are precision-fixed on the prisms. Therefore, even if a CCD fails, it is not possible to replace the deffective CCD alone. The entire optical block assembly should be replaced in such a case.**
- **The optical block assembly (SCM1059-N0A[NTSC]/ SCM1059-P0A[PAL]) provided as a service part is not equipped the DR board. When replacing the assembly, attach the circuit boards and the bracket to the new optical block assembly before mounting it in the camera head.**

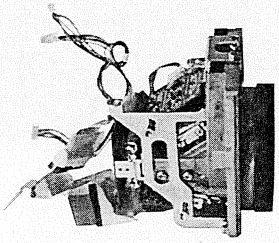

Fig. 1-4-6 Optical Block Assembly

NOTE

When re-assembling the optical block assembly to the body, make sure that do not injure each wire assembly. Otherwise , it may cause a machine trouble.

1.5 DISASSEMBLY OF THE EACH BOARDS IN CAMERA PART

1.5.1 Disassembly of DR board

(1) Remove the right side cover. (refer to the subsection 1.2.3)
(2) Remove the 4 screws from the front panel. (refer to the subsection 1.4)
(3) Draw out the optical block assembly front wards together with front frame.
(4) Disconnect the three connectors Ⓑ, Ⓒ and Ⓓ direction in order to remove the flexible wires.
(5) Remove the four screws ⑩ then remove the DR board.

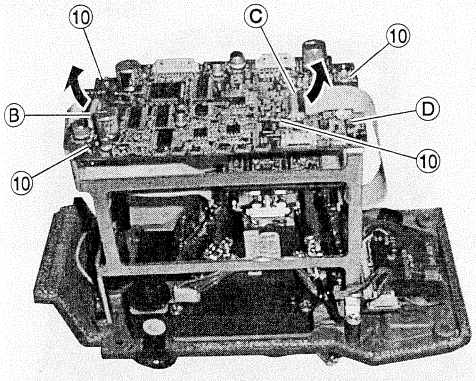

Fig.1-5-1

1.5.2 Disassembly of the CP board

(1) Open the right side cover. (refer to the subsection 1.2.3)
(2) Remove the five screws ⑫ .
(3) Lift the CP board up.

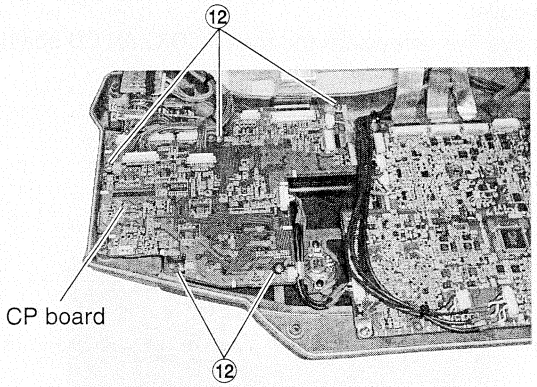

Fig. 1-5-2

1.5.3 Disassembly of the PS board

(1) Remove two screws and remove the cassette cover.(refer to subsection 1.2.1)
(2) Remove the left side cover .(refer to the subsection 1.2.2).
(3) Remove two screws ⑬ then remove the PS board.

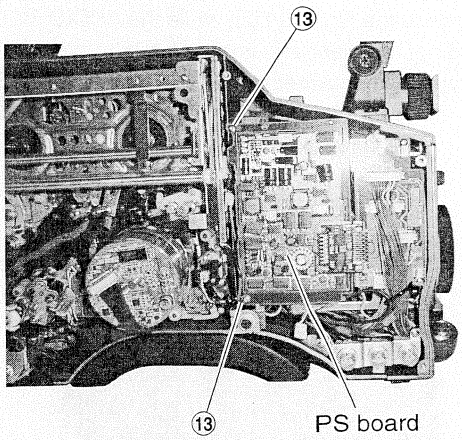

Fig. 1-5-3

1.6 DISASSEMBLY OF THE EACH BOARD IN THE VTR PART

1.6.1 Disassembly of an AUDIO & LCD board

(1) Open the right side cover.(refer to the subsection 1.2.3) The AUDIO & LCD board is fixed on the back of the right side cover.

(2) Remove five screws ⑭ and then AUDIO & LCD board can be removed.

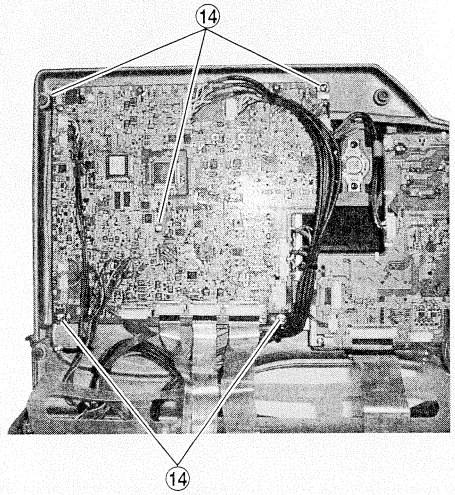

Fig. 1-6-1 (1)

(3) As shown in the Fig. 1-6-1(2), while the AUDIO & LCD board is standing, the diagnosis is possible.

Caution : If the connector is removed from lithium battery, all memory in LCD CPU will be clear. Refer to section 1.13 for more details.

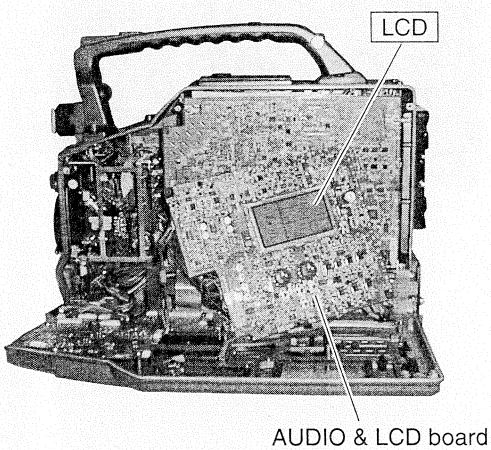

Fig. 1-6-1 (2)

1.6.2 Disassembly of the MAIN board

(1) Open the right side cover. (refer to the subsection 1.2.3)

(2) Remove the two screws ⑮ and put the MAIN board down in front of you.

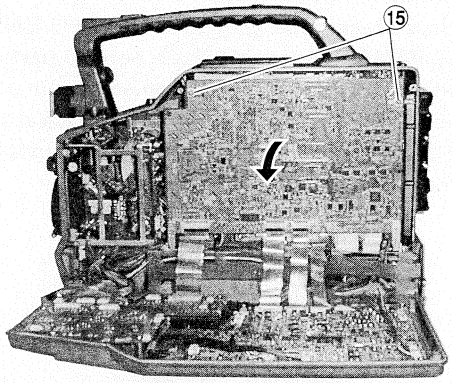

Fig. 1-6-2

1.6.3 Disassembly of the SS/RFP board

(1) Open the right side cover. (refer to the subsection 1.2.3)

(2) Remove the two screws and put the MAIN board down in front of you. (refer to the subsection 1.6.2)

(3) Remove the two screws ⑯ and put the SS/RFP board down in front of you.

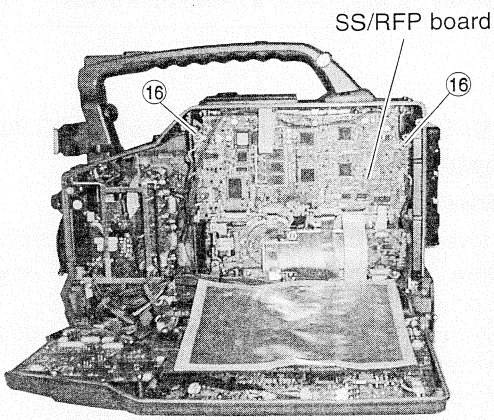

Fig. 1-6-3 (1)

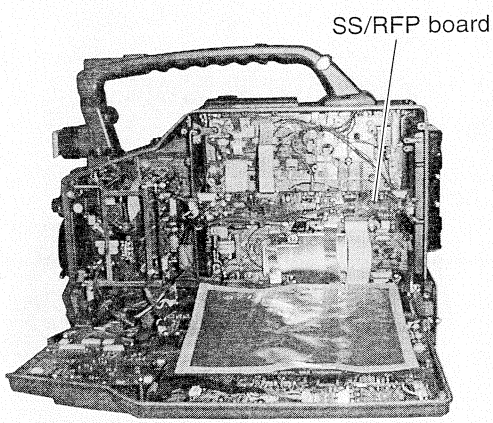

Fig. 1-6-3 (2)

1.6.4 Disassembly of PR board

(1) Open the right side cover. (refer to the subsection 1.2.3)
(2) Remove the two screws and put the MAIN board down in front of you. (refer to the subsection 1.6.2)

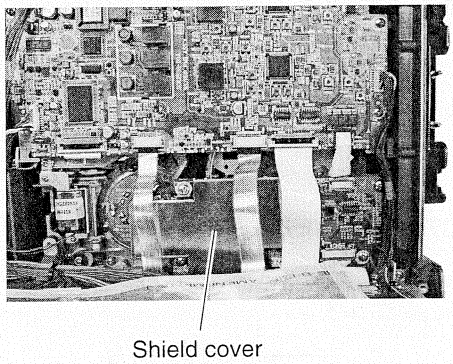

Fig 1-6-4 (1)

(3) Remove the four screws ⑰, then PR board can be removed.

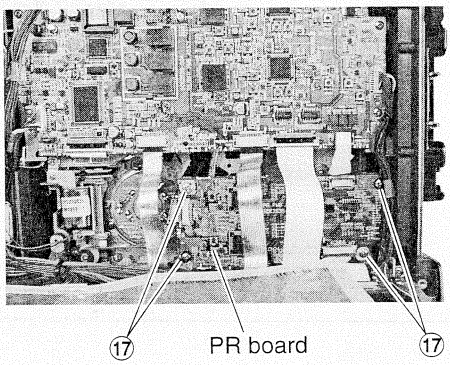

Fig 1-6-4 (2)

1.6.5 Disassembly for diagnosis of the back side of the main deck

(1) Remove the two screws and put the SS/RFP board. (refer to the subsection 1.6.3)
(2) Remove the two screws and put the PR board . (refer to subsection 1.6.4)
→ Diagnosis of the back side of the main deck.

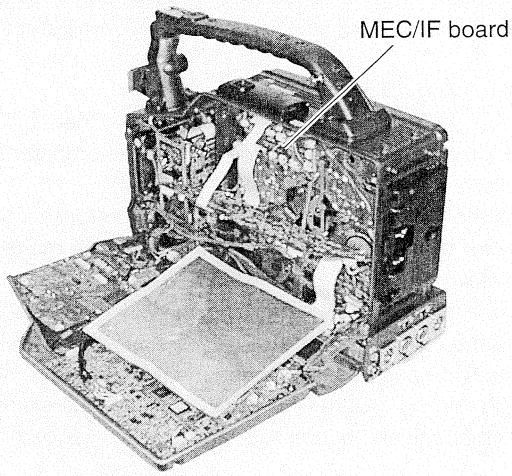

Fig. 1-6-5

1.6.6 Disassembly the I/O JUNC board

(1) Remove the bottom cover. (refer to the subsection 1.2.4)
(2) Remove the four screws ⑱ and then I/O JUNC board can be removed.

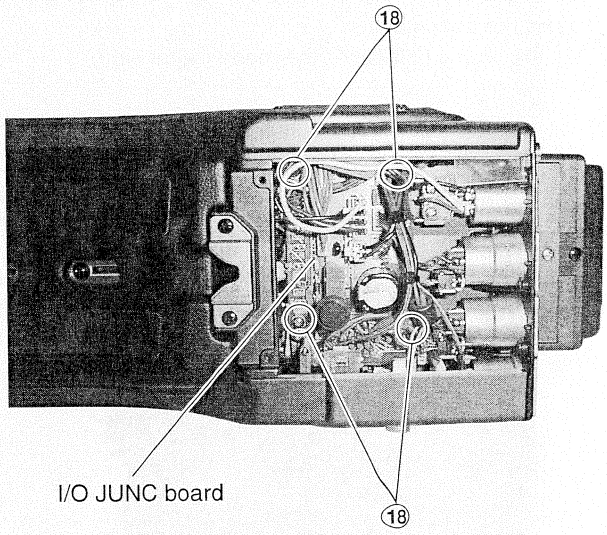

Fig. 1-6-6

1.7 HOW TO TAKE A CASSETTE OUT IN AN EMERGENCY

In case a cassette cannot be ejected because of malfunctions of the motor and mechanism systems, or any tape slack occurs, follow the procedure explained below to take the cassette out.

(1) Remove the left side cover. (Refer to the subsection 1.2.2)
(2) While observing the condition of the tape and mechanism, take the cassette out using one of the following procedures.

- How to wind a slack tape
  If a slack tape occurs when the unit is in the AUTO OFF mode, the tape should be wound with the emergency role function.

(1) Press the "STOP" and the "OPERATE" buttons simultaneously for three sec. or more in the AUTO OFF mode or immediately after the power is turned on.
(2) Confirm that the LCD counter displays " 63:P .00 00", then press the "REW" button while pressing the "OPERATE" button. (The supply reel winds the tape for approx. 80 ms.)
(3) Repeat the procedure (2) to wind up the tape slack, then press the "MENU" button to cancel the emergency role function.
(4) Press the "EJECT" button to take the cassette out.

- How to take a cassette out manually
  If the emergency role function does not operate because of a malfunction of the reel motor, or the unloading does not operate because of a malfunction of the loading motor, follow the procedure explained below to take a cassette out.

(1) Take out the SS/RFP board and the PR board. (Refer to the subsection 1.6.3 and 1.6.4)
(2) Remove the screw ① and the spring hook Ⓐ in order to loosen the timing belt.
(3) Take the timing belt out at the mode motor side.

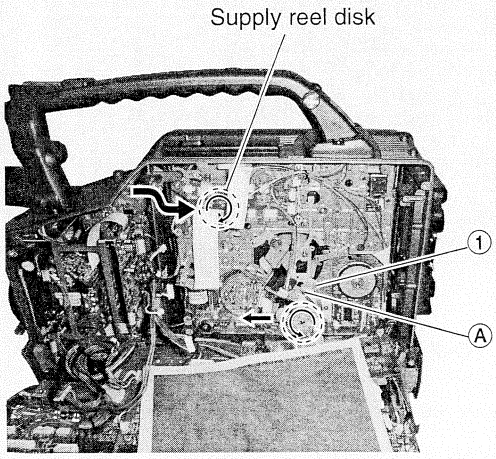

Fig. 1-7 How to take a cassette out manually

(4) Turning the timing belt in the direction shown in the Fig. 1-7 allows performing of the unloading and eject functions. Any tape slack occurring with this procedure should be wound by inserting a finger from the direction shown with an arrow in the diagram in order to turn the supply reel disk.

* Refer to subsection 2.7.12 for instructions on installing the timing belt.

1.8 FUNCTIONS OF INTERNAL SWITCHES

Internal switches are as follows.

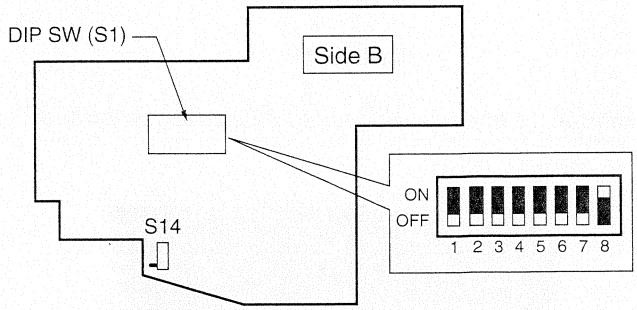

Fig. 1-8-(1) Switches on the CP board

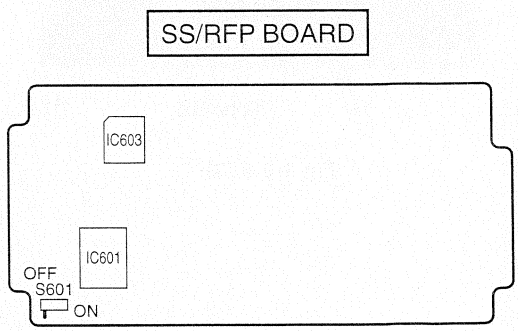

Fig. 1-8-(2) Switch on the SS/RFP board

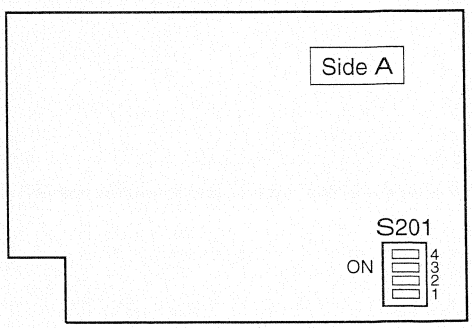

Fig. 1-8-(3) Switch on the MAIN board

1.8.1 Dip switch S1 on the CP board have the functions as described below.

Symbol	No.	Switch Name	Function	Initial
S1	1	Adjustment mode	Adjustment mode ON/OFF	OFF
	2	Check mode	Check mode ON/OFF	OFF
	3	Not use		OFF
	4	Not use		OFF
	5	Not use		OFF
	6	Color MATRIX setting	Color MATRIX setting mode ON/OFF	OFF
	7	Setup	ON (0% Setup)/OFF (7.5% setup) : NTSC Do not care (0% setup) :PAL	OFF
	8	Function setting	Initial setting of camera's function	Refer to table 1-8-3

Table 1-8-1

- Adjustment mode (S1-1)
  Setting S1-1 to ON initiates the adjustment mode.
  For details of this mode, please read section "3.2.7 Adjustment procedure in the adjustment mode".

- Check mode (S1-2)
  Setting S1-2 to ON initiates the check mode.
  This mode is used to display the auto white balance and auto iris data which stored in CPU on the viewfinder screen. It will be able to display on the monitor screen, too.
  (Refer to the "3.2.6 Simultaneous display in both viewfinder and monitor")
  (This mode do not use for adjustment)

```
— CHECK MODE —
R-G              : *
B-G              : *
R GAIN LEVEL     : *
B GAIN LEVEL     : *
PEAK             : *
APL              : *
NAM ERROR        : *
GAIN *dB         : *
```

R-G/B-G
This shows the R,G,B signal input to the CPU to control white balance with R-G and B-G.

R GAIN LEVEL / B GAIN LEVEL
These two items of data show the control signal level for a white balance of R and B channels.

PEAK
This data shoes the peak-hold value of the signal in 1 vertical scanning period.

APL
This data shows the average value of video signal level.

NAM ERROR
This data shows the NAM value for use in the auto iris control.

GAIN
This data shows the GAIN value that is set by the [GAIN] switch located on the right side of the main unit. When the full automatic shooting mode is operated, "ALC" is shown.

NOTE
When shading correction is activated, vartical lines might be appeared on monitor screen.

- Color MATRIX setting (S1-6)
  Setting S1-1 to ON initiates the color Matrix setting mode.
  For details of this mode, please read section "1.15".
  (This adjustment is usually not necessary to be done. Perform it only when it is required to do so, as the customer want to do special setting.)

- Setup(S1-7 : Only for NTSC model)
  Setting S1-7 to ON/OFF allows to select whether the camera out signal is to be with setup or not. The factor setting is OFF for with the no setup. The signal level does not change by changing the position of this switch.(Adjustment after switching is not necessary).

- Function setting (S1-8)
  The initial setting described in table 1-8-2 and 1-8-3 will be switched according to the setting of S1-8.

S1-8	NTSC *	PAL *
ON	U version	E version
OFF	Japan version	–

Table 1-8-2

* Automatically selected for NTSC or PAL by HD frequency.

Function		S1-8		
		NTSC		PAL
		OFF	ON	Do not care
GAIN	L	0 dB	0 dB	0 dB
	M	6 dB	9 dB	9 dB
	H	9 dB	18 dB	18 dB
V. SCAN		60.5 – 249.7	60.5 – 1966.7	50.4 – 1953.1
ALC GAIN		0 to +12 dB	0 to +18 dB	0 to +18 dB
EEI		1/60 to 1/240	1/60 to 1/240	1/50 to 1/200

Table 1-8-3

The GAIN switch can be set with the [ADVANCED MENU].

1.8.2 Internal switch on CP board (S14)

This switch is used to cut for the communication from CPU to VTR SS/RFP board.

Setting	Function	Initial Setting
VTR	Communicate for VTR SS/RFP board.	VTR
RS-232C	Do not communicate for VTR SS/RFP board and can be communicated for others.	

Table 1-8-4

1.8.3 Internal switch on SS/RFP board (S601)

This switch is used to select the warning cancellation.

Setting	Function	Initial Setting
OFF	The warning detection circuit works.	OFF
ON	(1) It does not enter the warning mode (excluding alarm display). (2) Mechanism operation is available without an AV micro computer (MAIN board).	

Table 1-8-5

NOTE

This switch has to be OFF except when warning occurrence requires analysis.

1.8.4 Internal switch on MAIN board (S201)

This switch is to be used to adjust for the DRUM'S charactristic. (refer to subsection 2.5.2)

1.8.5 EEPROM (Camera)

IC9 on the CP board is an EEPROM (electrically erasable and programmable read-only memory), serving to store the data as below.

If the EEPROM fails and has to be replaced, set the data as below.

- Adjusted value with [ADJUSTMENT MODE]
- Setting details for [MAIN MENU] and [ADVANCED MENU]
- Address data of blemish position
- Auto white balance data (AW1/AW2)
- V-SUB voltage data

1.8.6 Displaying version numbers of the ROMs

When the power is switched ON by the [OPERATE] switch while also pressing the [MENU] button, the version number of the ROM (IC4 on the CP board) is indicated on the view finder screen for 1 second.

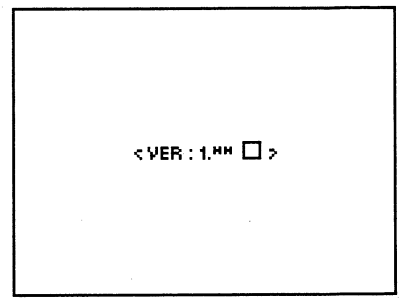

□ mark	Meaning	
U	U version	(NTSC)
E	E version	(PAL)
I	Japan version	(NTSC)

NOTE

If the ROM (IC4 on the CP board) is replaced, SYSTEM RESET is required. (refer to the subsection 1.8.7.)

1.8.7 SYSTEM RESET

When the power is switched ON by the [OPERATE] switch while also pressing the [SET] button, the system is reset and data set at MENU screen returns to the initial setting.

The items to be initialized with the system reset are shown below.

<Items which are set to be initialized>

- Setting data of [MAIN MENU]

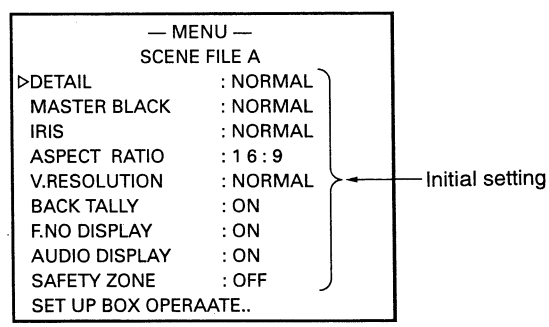

- [ADVANCED MENU] screen
  The details for FILE A and FILE B set at the [SCENE FILE] which will be initialized.

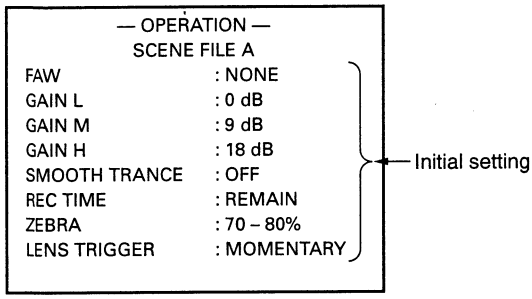

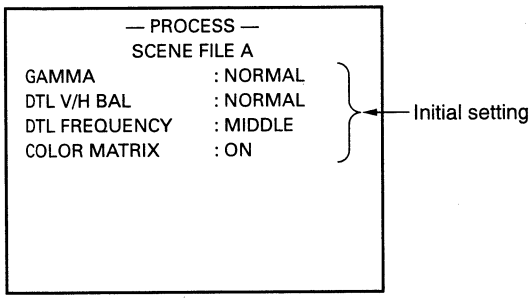

- Other initial setting

Functions	Initial setting values
SHUTTER	NTSC 1/100 PAL 1/120
V. SCAN	NTSC 1/100.2 PAL 1/120.1
STATUS	STT 0
LOLUX	OFF
FULL AUTO	OFF
W. BAL A	R ch 84 B ch 156
W. BAL B	R ch 84 B ch 156

Table 1-8-6

<Items of which the setting will not be initialized>
- Setting date for [ADJUSTMENT MODE] and [SERVICE MENU].
- Setting for mechanical switches.

1.8.8 Detect area of Auto Iris

The exposure detection system used for the Auto Iris is based on a zone pattern that assigns a priority according to the probable important subject area.

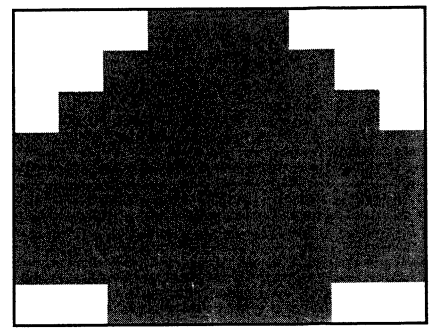

1.8.9 Tripod base

See the KA-510U service manual No. 60065 for servicing.
The tripod is not exactly same as KA-510U. See note for the difference.

Note

These 1/4 and 3/8 inch fixing tripod holes are not povided for the KA-510U.

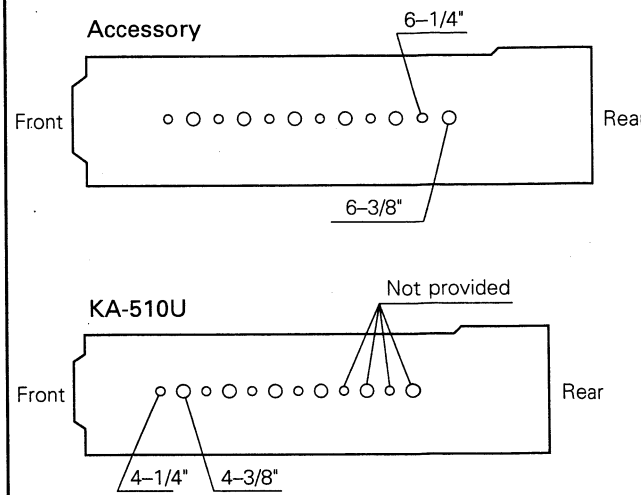

1.9 DIAG MODE

1.9.1 Structure of DIAG mode

DIAG (diagnostics) mode is used for service operation. There are nine groups as shown in the Fig. 1-9-1.

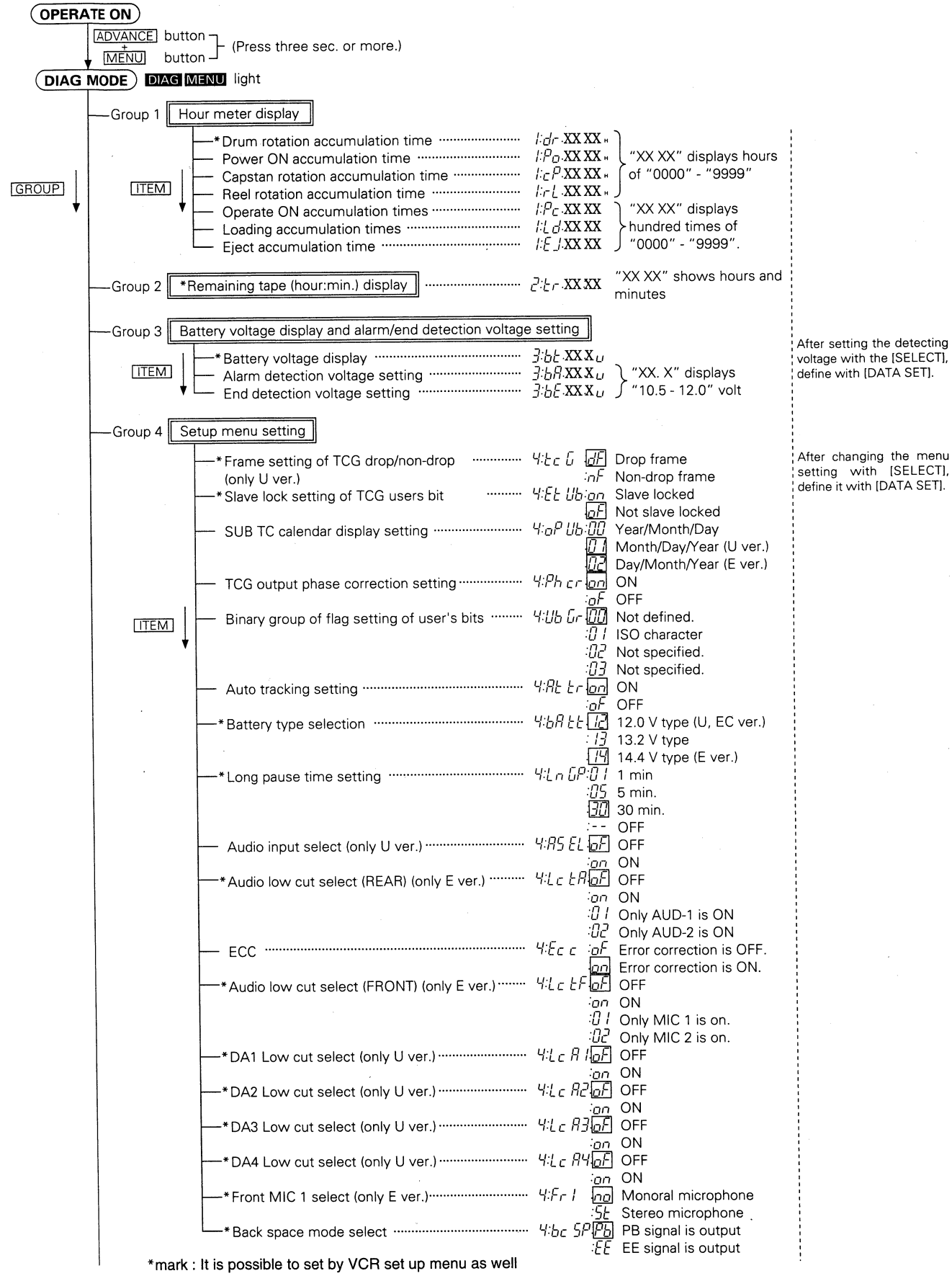

*mark : It is possible to set by VCR set up menu as well

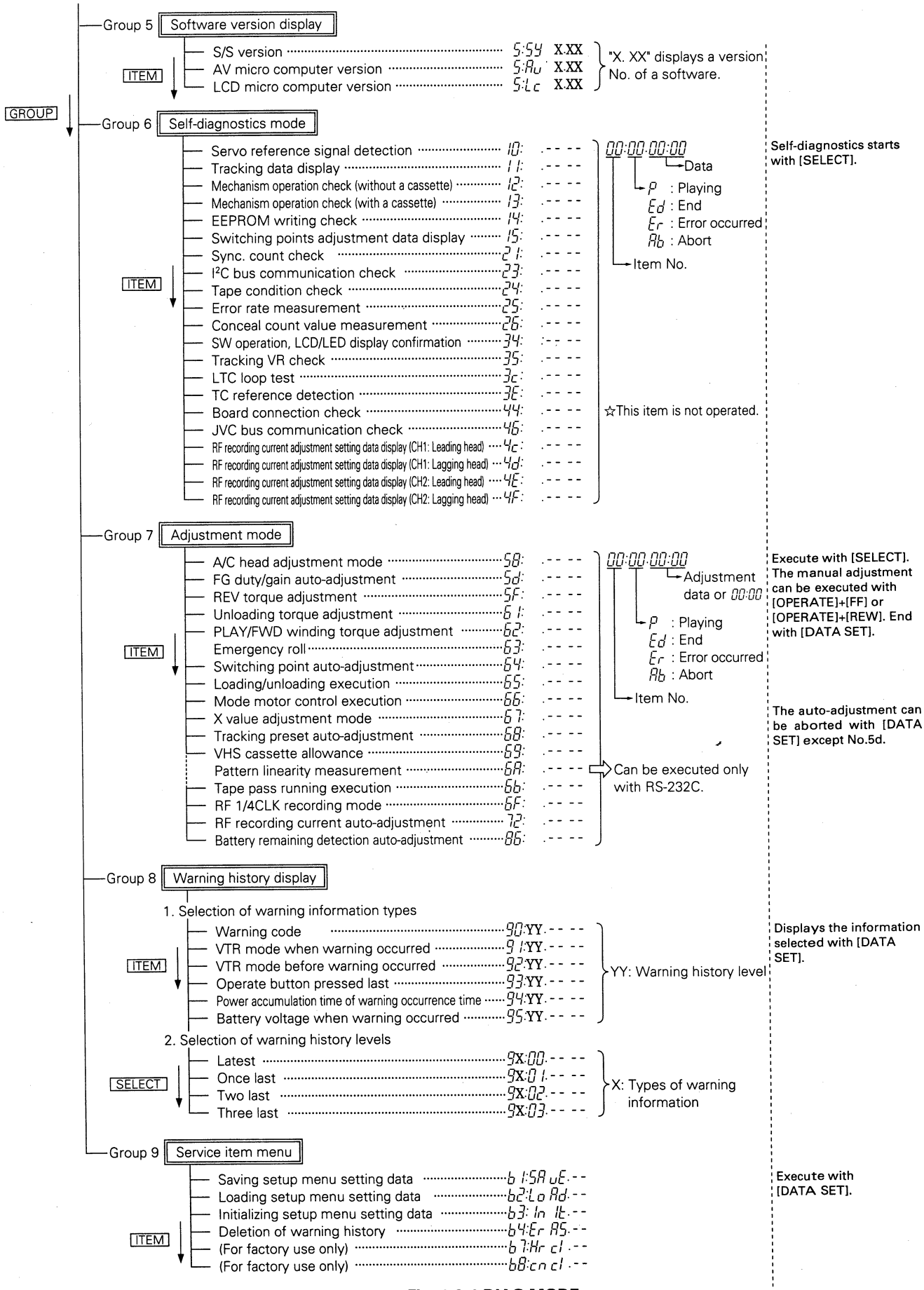

Fig. 1-9-1 DIAG MODE

1.9.2 How To Select Items

(1) Set the [POWER SW] to ON, then open the operation cover ①.

(2) Initiate DIAG mode.
Open the door ② at the TIME CODE/SETUP MENU setting section, then hold the [MENU] button for three sec. or more while pressing the [ADVANCE] button.

→ [MENU] and [DIAG] display light on the display and the DIAG menu appears on the counter display.

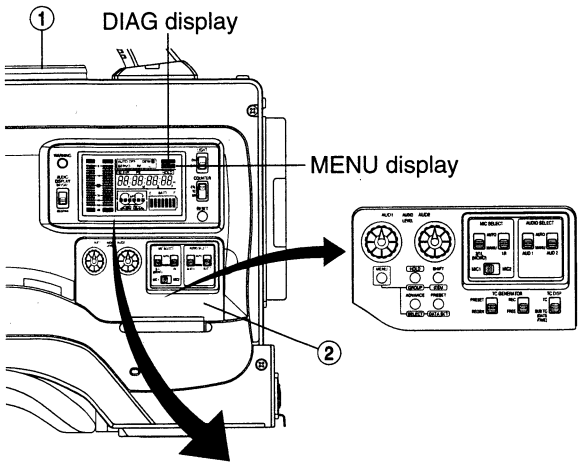

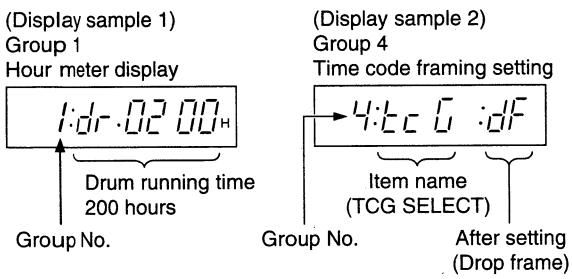

(3) Select a group.
Switch the group display of the counter display by pressing the [GROUP] button.

[Group No. display]

Group 1 :"1" — Hour meter display and individual reset (7 items. See Fig. 1.9.1.)

Group 2 : "2"— Remaining tape (hour:min.) display (1 item. See Fig. 1.9.1.)

Group 3 :"3" — Battery voltage display and alarm/end detection voltage setting (3 items. See Fig. 1.9.4.)

Group 4 :"4" — Setup menu setting (12 items. See 1.9.5.)

Group 5 :"5" — Software version display (3 items. See 1.9.6.)

Group 6 :"10" - "4F" — Self-diagnosis mode (21 items. See 1.9.7.)

Group 7 :"58" - "86" — Adjustment mode (17 items. See 1.9.8.)

Group 8 :"9 " — Warning history display (6 items. See 1.9.9.)

Group 9 :"b " — Service item menu (6 items. See 1.9.10)

(4) Select the item in the group.
Pressing the [ITEM] button allows display of the desired item on the counter display.

1.9.3 How to end the DIAG mode

Pressing the [MENU] button to clear the DIAG mode.

1.9.4 How to set the battery alarm/end detection voltage setting (Group 3)

Alarm/end detection voltage setting can be set with the voltage values while 12 V battery is used. Which means that the alarm/end is detected at a voltage with 1.1 times the display voltage with a 13.2 V battery and 1.2 times with a 14.4 V battery.

Example) Setting with 10.5 V: 13.2 V type→10.5 x 1.1 =11.6 V
14.4 V type→10.5 x 1.2 = 12.6 V

[How to operate]

(1) Initiate the DIAG mode and display the following items. (See the section 1.9.2.)

- Alarm detection voltage display
  3:bA.XXXU (Factory setting: 11.1 V)
- End detection voltage display
  3:bE.XXXU (Factory setting: 10.5 V)

(2) Set the detection voltage by pressing the [SELECT] button.

→ Display data blinks. The display data increase every 0.1 V each time the [SELECT] button is pressed.

→ While the display data is blinking, pressing the [MENU] button allows display of the "Abort" sign for approx. two sec., then the DIAG mode ends without saving the data.

3:-A.bo.rt

(3) Press the [DATA SET] button.

→ The setting data is saved in the EEPROM. During saving, the SAVE display appears for one sec.approx.

3:-S.Au.E-

If the alarm detection voltage is set lower than the end detection voltage, the alarm display occurs when the battery voltage falls to the alarm detection voltage. End display appears in several seconds regardless of the end detection voltage.

1.9.5 How to set the setup menu (Group 4)

With a setup menu setting of DIAG mode, menu settings for both users and services are available.

(1) Initiate the DIAG mode and select the setup menu item. (See the section 1.9.2.)

(2) Select the setting values with the [SELECT] button.

(3) Press the [DATA SET] button.

→ The setting data is saved in the EEPROM. During saving, the SAVE display appears for one sec.approx.

3:-S.Au.E-

Menu names	Counter displays	Details
TCG DROP/NON-DROP (only U version)	4:tc G :dF :nF	Menu for users (See page 64 of the instruction manual.)
U-BIT SLAVE ON/OFF	4:Et Ub:on :oF	Menu for users (See page 64 of the instruction manual.)
SUB TC DATE STYLE	4:oP Ub:00 :01 :02	Selection of the data order of the SUB TC U-BIT (Year/Month/Day calendar) 00: Year/Month/Day 01: Month/Day/Year 02: Day/Month/Year
PHASE CORRECTION	4:Ph cr:on :oF	Selection whether to execute the phase compensation of TC OUT terminal output on: Execute the phase compensation oF: Not execute the phase compensation
U-BIT BINARY GROUP FLAG	4:Ub Gr:00 :01 :02 :03	Setting of the binary group flag of the user's bits 00: Not appointed as character sets 01: ISO character 02/03: Not specified
AUTO TRACKING	4:At tr:on :oF	Selection whether to operate the auto tracking during the PLAY mode. on: Operate oF: Not operate. At this time, the tracking VR inside the connector box is effective.
BATT. TYPE SELECT	4:bA tt: 12 : 13 : 14	Menu for users (See page 64 of the Instruction manual.)
LONG PAUSE TIME	4:Ln GP:01 :05 :30 :--	"- -" (prohibition of long pause) cannot be set at the menu for users (see page 64 of the Instruction manual).
AUDIO INPUT SELECT (only U version)	4:AS EL:oF :on	Selection for factory use oF: Normal mode DA1 DA2 DA3 DA4 on: Factory use mode AUD1 MIC2 AUD2 MIC1 AUD1 AUD2 MIC1 MIC2
AUDIO LOW CUT SELECT (REAR) (only E version)	4:Lc tA:oF :on :01 :02	Menu for users (See page 64 of the Instruction manual.)
ECC	4:Ec c :on :oF	ON/OFF of the cancellation circuit of the error compensation on: Compensation errors. oF: Non compensation errors.
AUDIO LOW CUT SELECT (FRONT MIC) (only E version)	4:Lc tF:oF :on :01 :02	Menu for users (See page 64 of the Instruction manual.)
DA1 LOW CUT SELECT (only U version)	4:Lc A1:oF :on	Menu for users (See page 64 of the Instruction manual.)
DA2 LOW CUT SELECT (only U version)	4:Lc A2:oF :on	
DA3 LOW CUT SELECT (only U version)	4:Lc A3:oF :on	
DA4 LOW CUT SELECT (only U version)	4:Lc A4:oF :on	
FRONT MIC1 SELECT (only E version)	4:Fr 1 :on :St	Menu for users (See page 64 of the Instruction manual.)
BACK SPACE MODE SELECT	4:bc SP:Pb :EE	Menu for users (See page 64 of the Instruction manual.)

Table 1.9.5 (1) Setup menu

1.9.6 Software version display (Group 5)

These items allow confirmation of software versions in use without removing the outer case of the set. The details of the displays are shown below.

Menu names	Counter display	Board names Symbol No.	Remarks
SYSCON/SERVO version	5:54 X.XX	SS/REP board IC603	PLSC1235-VX-XX
AV micro computer version	5:Au X.XX	MAIN board IC101	PLSC1236-VX-XX
LCD micro computer version	5:Lc X.XX	AUDIO & LCD board IC401	PLSC1237-VX-XX (E Version) PLSC1262-VX-XX (U Version)

Table 1.9.6 (1) Software version display

1.9.7 Self-diagnosis mode (Group 6)

Twenty-one menus are provided in the self-diagnosis mode to check the internal operation of the set. Pressing the [SELECT] button after selecting a menu allows starting of the self-diagnosis.
At this time, the following displays appear on the counter display.

XX: .-- --	Display during the menu selection.
XX:P .YY YY	Display during menu execution.
XX:Ed.YY YY	Display when menu ends.
XX:Er.YY YY	Display when error occurs.
XX:Ab.YY YY	Display when menu is aborted.

Data
Menu No.

(1) Detection of servo reference signal

10: .-- --

This menu allows checks if the servo reference signal is being supplied normally to the S/S micro computer.

[How to operate]

During the above a menu is displayed, the result of the diagnosis is displayed when the [SELECT] button is pressed.

- Normal 10:Ed.00 00
- Abnormal 10:Er.00 00

If an error display appears, check if the TSR signals (75 Hz) generated from DCI-P (MAIN board IC206-pin120) is supplied to the S/S micro computer (SS/RFP board IC601-pin67).

(2) Tracking data display

11: .-- --

This menu allows display of the present tracking phase data.

[How to operate]

During the above a menu is displayed, the tracking data (hexadecimal number) is displayed when the [SELECT] button is pressed.

Display sample 11:Ed.05:bF

In case the tracking data during the alignment tape MSHP-X playback is out of the area either the "6097" H - "61C1" or the "0000" H - "0EA8" H, X values may be misadjusted.

(3) Mechanism operation check (without a cassette)

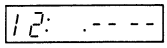

This menu is used for checking the mechanism operation.

[How to operate]

With the above display, pressing the [SELECT] button allows the starting of the mechanism automatically without inserting a cassette tape to check if there is any abnormality in the mechanism. The result of the diagnoses is displayed as follows.

- Normal 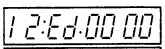

- Abnormal 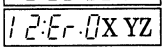

In the data area of the error display, the data "X", "Y" and "Z" (hexadecimal number) which indicate abnormal points are displayed. Correspond them to the table below in order to detect any abnormal occurrence points. In the tables, the mark "○" is provided for the points where an abnormality occurs. For example, if "12: ER. 00 40" is displayed, it means that data "Y" is "4", so that you can tell that the abnormality of "Capstan motor does not rotate" has occurred by Table 1.9.7 (2).

Display "X"	0	1	2	3
Unloading failed.			○	○
Loading failed.		○		○

Table 1.9.7 (1) Mechanism operation abnormality display "X"

Display "Y"	0	1	2	3	4	5	6	7
Capstan motor does not rotate.					○	○	○	○
Drum motor does not rotate.			○	○			○	○
Reel brake does not work.		○		○		○		○

Table 1.9.7 (2) Mechanism operation abnormality display "Y"

Display "Z"	0	1	2	3	4	5	6	7	8	9	A	b	c	d	E	F
TU reel does not rotate.									○	○	○	○	○	○	○	○
SUP reel does not rotate.					○	○	○	○					○	○	○	○
Condensation has occurred.			○	○			○	○			○	○			○	○
Tape LED abnormality		○		○		○		○		○		○		○		○

Table 1.9.7 (3) Mechanism operation abnormality display "Z"

(4) Mechanism operation check (with a cassette)

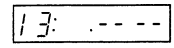

This mode is used for checking a mechanism operation.

[How to operate]

During the above displays, inserting a cassette tape allows the start of the mechanism automatically in order to diagnose if there is any abnormality.

- Normal 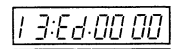

- Abnormal 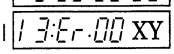

In the data area of the error display, the data "X" and "Y" (hexadecimal numbers) which indicate abnormal points are displayed. Correspond them to the table below to detect any abnormal occurrence points. In the table below, the mark "○" is provided for the points where an abnormality occurs.

Display "X"	0	1	2	3	8	9	A	b
Unloading failed.					○	○	○	○
Loading failed.			○	○			○	○
TU reel abnormality		○		○		○		○

Table 1.9.7 (4) Mechanism operation abnormality display "X"

Display "Y"	0	2	4	6	8	A	c	E
SUP reel abnormality					○	○	○	○
End sensor abnormality			○	○			○	○
Begin sensor abnormality		○		○		○		○

Table 1.9.7 (5) Mechanism operation abnormality display "Y"

(5) EEPROM writing check

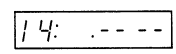

This menu allows checks if the data has been written to EEPROM (SS/RFP board IC606) correctly or not.

[How to operate]

During the above display, pressing the [SELECT] button allows a start of the diagnosis and displays the results as follows.

- Normal 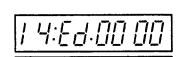

- Abnormal 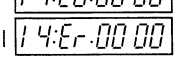

In case an error display appears, the EEPROM may be damaged.

(6) Switching points check

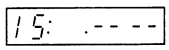

This menu allows us to measure the switching points during playback.

[How to operate]

After pressing the [SELECT] button during the above display, insert a cassette tape in order to initiate the PLAY mode. An S/S micro computer starts measuring the switching points and displays the results of the measured data (hexadecimal numbers) as follows.

- Measured value display 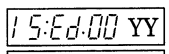

- Error display 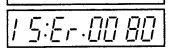

(In the case that measuring was impossible)

The measured data "YY" should be in the area between "0C" H - "F4" H. If it is out of this area or an error display appears, check the switching point auto-adjustment (Menu No. 64) and also if an HID signal (position information of a rotation head) and SPA signal (recording position information of ITI signal on the tape pattern, SS/RFP board IC601-pin56) are correctly supplied to S/S micro computer.

(7) Sync. count check

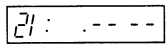

This menu allows us to check if the DCI-P (MAIN board IC206) can read the playback signal data correctly or not.

[How to operate]

After pressing the [SELECT] button during the above display, insert a cassette tape in order to initiate the PLAY mode. The DCI-P starts checking the sync. data playback signals for each head and displays the result as follows.

- Normal 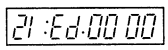

- Abnormal 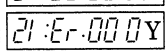

In case the data cannot be detected correctly, an error display as above appears.

Correspond the display data "Y" to the table below in order to find out which head's output has an abnormality.

Display "Y"	0	1	2	3	4	5	6	7	8	9	A	b	c	d	E	F
CH2 Primary head									○	○	○	○	○	○	○	○
CH2 Trailing head					○	○	○	○					○	○	○	○
CH1 Primary head			○	○			○	○			○	○			○	○
CH1 Trailing head		○		○		○		○		○		○		○		○

Table 1.9.7 (6) Sync. count error data

In case the error display appears, there may be some dust on the rotation head or its service life is coming to an end, also the RF equalizer (SS/RFP board IC301, IC401) may be misadjusted or DCI-P (MAIN board IC206) may be damaged.

(8) I²C bus communication check

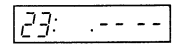

This menu allows us to diagnose if the AV micro computer (MAIN board IC101) communicates correctly with each of the digital process ICs on the MAIN board.

[How to operate]

During the above display, pressing the [SELECT] button allow us to start diagnosis and display results as follows.

- Normal 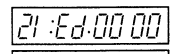

- Abnormal 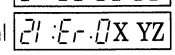

If any communication error occurs, data "X", "Y" and "Z" which indicate the abnormality points are displayed on the above error display. Correspond them to the table below in order to find out in which IC the communication abnormality has occurred.

Display "X"	0	1	2	3	4	5	6	7	8	9	A	b	c	d	E	F
AUDIO-2 (IC702)									○	○	○	○	○	○	○	○
AUDIO-1 (IC700)					○	○	○	○					○	○	○	○
SHUFF (IC224)			○	○			○	○			○	○			○	○
ECC-2 (IC217)		○		○		○		○		○		○		○		○

Table 1.9.7 (7) I²C bus communication error data "X"

Display "Y"	0	4	8	c
ECC-1 (IC216)			○	○
DCI-P (IC206)		○		○

Table 1.9.7 (8) I²C bus communication error data "Y"

Display "Z"	0	1
DCI-R (IC201)		○

Table 1.9.7 (9) I²C bus communication error data "Z"

(9) Tape condition check

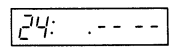

This menu judges the tape playback condition from the numbers of errors detected by DCI-P (MAIN board IC206) during playback and displays the results classified by four different levels.

[How to operate]

During the above display, press the [SELECT] button, then insert a cassette tape to initiate the PLAY mode to display the tape conditions as follows.

Hardly any errors

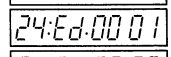

Some errors

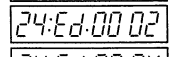

Many errors

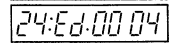

Normal playback is not possible.

If error rate level "4" is displayed, there may be some dust on the rotation head or its service life is coming to an end, The RF equalizer (SS/RFP board IC301, IC401) may be misadjusted or the DCI-P (MAIN board IC206) may be damaged.

(10) Error rate measurement

25: .-- --

This menu displays how many inner errors have occurred at the sync. block during two frames.

[How to operate]

Press the [SELECT] button, then insert a cassette tape to initiate the PLAY mode in order to display the error rate (hexadecimal numbers) as follows.

25:Ed.00 YY

(11) Concealed count

26: .-- --

This menu displays the numbers of error corrections of the video data carried out by the ECC (MAIN board IC216, IC217) per frame.

[How to operate]

Press the [SELECT] button, then insert a cassette tape in order to initiate the PLAY mode. The AV micro computer starts measuring the concealed count values in order to display the result as follows.

26:Ed. YY YY

(12) SW operation, LCD/LED display confirmation

34: .-- --

This menu is used for checking if the OPERATE SW and LED/LCD displays are operating correctly.

[How to operate]

Press the [SELECT] button to initiate this menu. The operation check is available with the following procedures.

- While the FF, REW, STOP, PLAY or EJECT button is pressed, the corresponding LED lights.
- While the [PRESET] button is pressed, all the segments of LCD light.
- While the [RESET] button is pressed, all the segments of the LCD turn off.
- The switch operation can be checked with a display on the COUNTER DISPLAY.

34:P .AB CD

A: [COUNTER] switch setting
2: "UB" side, 1: "TC" side, 0: "CTL" side
B: [TC GENERATOR] switch setting
1: "PRESET" side, 0: "REGEN" side
C: [TC GENERATOR] switch setting
1: "REC" side, 0: "FREE" side
D: [TC DISP] switch setting
1: "TC" side, 0: "SUB TC" side

(13) Tracking VR test

35: .-- --

This menu is used for an operational check of the tracking VR inside a connector box.

[How to perform the operation]

Set the auto tracking setting "4: At tr" of the setup menu to "oF", then select the tracking VR test "35: .-- --". In this condition, pressing the [SELECT] button allows to display

35:P .00 YY

When the tracking VR is turned on, if the display data varies beyond the area between "40" - "C0", the tracking VR is normal.

(14) LTC loop test

3c: .-- --

This menu diagnoses the input/output circuit of the LTC by checking if the LTC reader (AUDIO&LCD board IC401) correctly reads the test signals generated from the LTC generator (AUDIO&LCD board IC401).

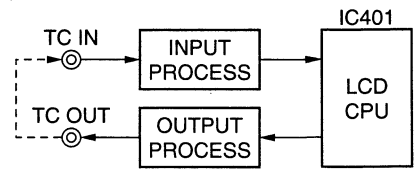

[How to operate]

During the above display, press the [SELECT] button, then carry out the loop connection between the TC IN terminal and the TC OUT terminal.
The results of the diagnostics are displayed as follows.

- During execution 3c:P .00 00 (if the loop connection is now provided, the display will not be changed.)
- Normal 3c:Ed.00 00
- Abnormal 3c:Er.00 00

(15) TC reference signal detection

3E: .-- --

This menu allows to check if any FRP signals (AUDIO&LCD board IC401 - pin64) which are standard for the running of the time code data, are being supplied to the TC generator.

[How to operate]

During the above display, pressing the [SELECT] button allows to start diagnostics and displays the results as follows.

- Normal 3E:Ed.00 00
- Abnormal 3E:Er.00 00

(16) Board connection check

44: .-- --

This menu is not operated because it is dummy.

(17) JVC bus communication check

46: .-- --

This menu allows to diagnose if the S/S micro computer (master CPU) and each slave CPU (AV micro computer, LCD micro computer) are communicating correctly.

[How to operate]

During the above display, pressing the [SELECT] button allows to start the diagnosis and displays the results as follows.

- Normal 46:Ed.00 00
- Abnormal 46:Er.001 X (X : 3 = AV micro computer, 5 = LCD micro computer)

When any communication error occurs, it locates which of the communications with the CPU caused the error and displays the information on the above error display.

(18) RF record current adjustment data display

4c: .-- -- CH1 Leading head
4d: .-- -- CH1 Lagging head
4E: .-- -- CH2 Leading head
4F: .-- -- CH2 Lagging head

This menu is used for confirming the adjustment values set by a recording current auto adjustment.

[Operation]

During the above display, pressing the [SELECT] button allows us to display the adjustment values for each head with hexadecimal numbers.

4c:Ed.00 YY CH1 Leading head adjustment data
4d:Ed.00 YY CH1 Lagging head adjustment data
4E:Ed.00 YY CH2 Leading head adjustment data
4F:Ed.00 YY CH2 Lagging head adjustment data

1.9.8 Adjustment mode (Group 7)

There are two menus which are provided for the adjustment mode; an auto adjustment menu to carry out the adjustment automatically and a setting menu to initiate the adjustment mode. How to execute each menu is explained in the corresponding adjustment item or the table below.

Menu names	Display	VTR operation	Remarks
Search audio x1 playback	5B: -- -- (while menu is selected)	Search audio is output during the PLAY mode. It accepts a VHS cassette, then the tape is run with the VHS SP mode speed. However, the picture and the HiFi audio cannot be played back.	2.11.3 A/C head azimuth adjustment 2.11.4 A/C head height adjustment
Capstan FG duty/gain auto adjustment	5d: -- -- (while menu is selected)	Adjust the duty ratio of the capstan FG to 50%. Carry out the gain adjustment of the capstan FG. (stop servo adjustment) No operation can be executed during the auto adjustment.	3.4.1 Capstan FG duty adjustment

Table 1.9.8 (1) Adjustment modes-1/3

Menu names	Display	VTR operation	Remarks
Reverse torque adjustment	5F: - - - - (while menu is selected)	It accepts a torque cassette for the VHS. Winding torque adjustment during the running of the REV is available. While the menu is being executed, the tape is always run by a capstan motor drive even if the FF/REW button is pressed. The tape speed of the search REV mode is then fixed to -1X speed.	2.9.2 Reverse torque adjustment
Unloading the torque adjustment	61: - - - - (while menu is selected)	It accepts a torque cassette for the VHS. During the search REV mode, the supply reel is rotated with a winding torque while unloading. While the menu is executed, the tape is always run by a capstan motor drive even if the FF/REW button is pressed. The tape speed of the search REV mode is fixed to -1X speed.	2.9.1 Unloading torque adjustment
PLAY torque adjustment	62: - - - - (while menu is selected)	It accepts a torque cassette for VHS. A winding torque adjustment of the take-up reel during the FWD is available. While the menu is executed, the tape is always run by a capstan motor drive even if the FF/REW button is pressed. The tape speed of the search REV mode is fixed to normal speed.	2.9.3 PLAY torque adjustment
Emergency roll mode	63: - - - - (while menu is selected)	In case abnormal tape slack occurs, it drive the reel motor with low torque to wind up the slacked tape.	Refer to the section "1.7 HOW TO TAKE A CASSETTE OUT IN AN EMERGENCY".
Switching point auto adjustment	64: - - - - (while menu is selected)	The switching point adjustment is carried out automatically.	3.4.3 Playback switching point adjustment
Manually loading/unloading	65: - - - - (while menu is selected) 65:P .00 00 (during playing) 65:Ed.00 00 (end)	The loading and unloading can be carried out without inserting a cassette. If a cassette is already inserted, it eject the cassette, then starts this menu.	[How to operate] Select the menu with the [SELECT] button, then press the button below while pressing the [OPERATE] button. [FF] : Loading [REW] : Unloading
Manual loading motor control	66: - - - - (while menu is selected) 66:P .00 00 (during playing) 66:Ed.00 00 (end)	The loading motor can be rotated manually without inserting a cassette. If a cassette is already inserted, it eject the cassette, then start this menu.	[How to operate] Select the menu with the [SELECT] button, then press the button below while pressing the [OPERATE] button. [FF] : Rotates for 34 ms towards the loading direction [REW] : Rotates for 34 ms towards the unloading

Table 1.9.8 (1) Adjustment modes-2/3

Menu names	Display	VTR operation	Remarks
X value adjustment	67: - - - - (while menu is selected)	Auto tracking becomes OFF. Tracking the VR becomes invalid and playback starts at the tracking preset position.	2.11.5 X value adjustment
Tracking Preset auto adjustment	68: - - - - (while menu is selected)	The tracking is varied and the tracking position where an RF level becomes maximum, is searched automatically.	3.4.2 Tracking preset adjustment
VHS cassette acceptance	69: - - - - (while menu is selected)	It accepts a VHS cassette.	[How to operate] [SELECT]: Play [DATA SET] : End
Linearity measurement	6A: - - - - (while menu is selected)	Linearity measurement mode is initiated with the RS-232C control. Auto tracking becomes OFF and the tracking VR becomes invalid.	2.12 CHECK OF LINEARITY
Tape pass running	66: - - - - (while menu is selected) 66:P .000Y (while running is executed) 66:Ed.00 0F (when the 15 passes are completed) 66:Er.000Y (Error display)	When a cassette is inserted, it repeats PLAY mode (8 times) and SRH REV mode (7 times) on the same section of the tape (approx. 30 sec.), then eject the tape. While the running is being executed, the number of the executed running is displayed at "Y" with hexadecimal numbers. While the running is being executed, if the [DATA SET] button is pressed or the VTR mode is changed, or a tape end is detected during PLAY, an error message is displayed.	[How to operate] Select the menu by pressing the [SELECT] button, then insert a cassette on which a recording has been done.
RF REC1/4 CLK	6F: - - - - (while menu is selected) 6F:P .00 00 (during recording) 6F:Ed.00 00 (END)	Recording 1/4-divided clock (approx. 12.4MHz)	[How to operate] Select the menu by pressing the [SELECT] button, then record the internal clock.
RF recording current auto adjustment	72: - - - - (while menu is selected)	It varies the recording current value with 8 steps at every 4 times. (approx. 2 sec.) and records the internal oscillation clock (approx. 12.4 MHz). This process is repeated four times. (It takes a little more than four minutes.) Then, it plays back the recorded section automatically and detects the best recording current value out of the output levels for each head.	3.5.6 Recording current adjustment
Battery voltage detection auto adjustment	86: - - - - (while menu is selected)	S/S micro computer (SS/RFP board IC601) measures the voltage at pin 68 and writes the difference between that value and the optimum value as the compensation value of the battery detection circuit on the EEPROM.	3.7.1 Remaining battery defection circuit adjustment

Table 1.9.8 (1) Adjustment modes-3/3

1.9.9 Warning history display

In the menu of this group, the following data regarding the last four warnings occurring can be displayed.

Display at the selected menu	Type of warning information
90:YY- - - -	Warning code (Refer to the section 1.11)
91:YY- - - -	VTR mode when the warning occurred. (Refer to the table 1.9.9 (2).)
92:YY- - - -	VTR mode before the warning occurred. (Refer to the table 1.9.9 (2).)
93:YY- - - -	The last operate button to be pressed when the warning occurred. (Refer to the table 1.9.9.(3).)
94:YY- - - -	Power ON accumulated time [unit: hour] when the warning occurred.
95:YY- - - -	The battery voltage [unit: V] when the warning occurred.

Table 1.9.9 (1) Types of warning information

[How to operate]

(1) Initiate the DIAG mode and select the group 8. (Refer to the section 1.9.2.)
(2) Select the type of warning information with the [ITEM] button.
(3) Select the warning history level with the [SELECT] button.
(4) Pressing the [DATA SET] button allows us to display data regarding the selected information.

[Display example]

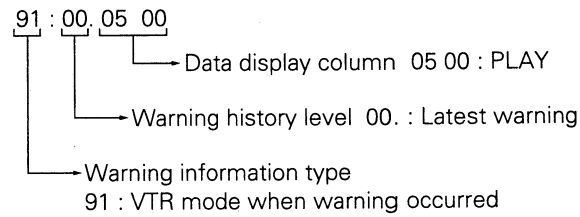

Data	VTR mode	Data	VTR mode	Data	VTR mode
0300	SEARCH FWD	0d00	STOP	8001	REC BACK SPACE
0400	SEARCH REV	1300	SKIP FWD	8002	REC PAUSE
0500	PLAY	1400	SKIP REV	8004	REC PLAY
0700	NO CASSETTE (EJECT)	1900	FF	8010	REC
0900	EJECT	1A00	REW	8101	ASSM BACK SPACE
0A00	NO CASSETTE (INTAKE END)	1b00	SHORT FF	8104	ASSM PLAY
0c00	STAND-BY OFF	1c00	SHORT REW	9202	REC LOCK

Table 1.9.9 (2) VTR mode data

Data	Operate button	Data	Operate button	Data	Operate button
3000	EJECT	3300	REW	4200	REC+PAUSE
3100	STOP	4000	PLAY	4500	STANDBY
3200	FF	4100	REC+PLAY	4600	REVIEW

Table 1.9.9 (3) Operate button data

1.9.10 Service item menu (Group 9)

In the menus of this group, the following menus are to carry out the data processing for the setup menu and the hour meter.

Menu selection displays	Functions
b1:SAuE.--	Save the setting data for the setup menu.
b2:LoAd.--	Set the setup menu to the setting saved at "b1:SAuE.--".
b3:In it.--	Set the setup menu to the factory set.
b4:ErAS.--	Delete the warning history data.
b7:HrcL.--	(For factory use only)
b8:cncL.--	(For factory use only)

Table 1.9.10 (1) Service items menu

[How to operate]

(1) Initiate the DIAG mode and select group 9. (Refer to the section 1.9.2.)
(2) Select the [ITEM] button on the menu.
(3) Pressing the [DATA SET] button allows execution. While the data is being written in the EEPROM, the "on" message is displayed for approx. one sec.

[Display example]

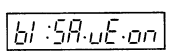

1.10 HOW TO DETECT THE ALARM

The DY-90 provides alarm display functions in order to inform users of the remaining condition of the tape and battery. This section explains how to detect them. Please refer to page 81 in the INSTRUCTIONS regarding the alarm display details.

Items	Conditions	Detecting methods
Servo lock error "SERVO"	At the IN point of the continuous recording, this occurs if a drum rotation phase error happens for more than 450 micro s or if the capstan motor rotation speed varies more than 6%.	S/S micro computer (SS/RFP board IC601) detects the drum rotation phase from the phase difference between the TSR signal and the ID signal, and the capstan motor speed from the frequency of the CAP x 2FG signal.
Head clog "RF"	This occurs when the RF signal is lacking for one second during the back space operation. (However, it also enters the alarm mode if the signal is lacking for 0.5 second just before ending the back space operation.)	It judges that the RF signal is lacking when the RF level detection circuit output (SS/RFP board IC615 - pin17) becomes lower than 0.27 V.
Lithium battery fault "Li"	This occurs when a lithium battery is exhausted or is not installed.	When the input voltage (AUDIO&LCD board IC 422 - pin3) of the battery backup switching circuit becomes lower than 2.7 V, the signal at the PREEND terminal (pin2) is at a low level. This results in the Alarm mode being entered.
Tape remaining time 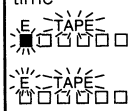	This occurs when the remaining tape is less than 2 min. during recording or the recording pause function, or when the tape end is detected during recording.	S/S micro computer (SS/RFP board IC601) detects the tape remaining time from the diameter of the supply reel and the tape end from the end sensor output.
Battery remaining time 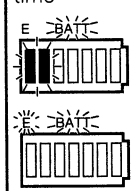	This occurs when the battery capacity is insufficient.	The S/S micro computer (SS/RFP board IC601) detects the battery voltage from the voltage at pin68. When 12 V battery is used: Approx. 1.19 V When 13 V battery is used: Approx. 1.84 V When 14 V battery is used: Approx. 2.43 V (Alarm detection voltage setting: at 11.1 V)

Table 1.10 (1) How to detect the alarms

1.11 ERROR CODES

The DY-90 diagnoses the causes of malfunctions and displays the error codes. The procedures of each error detection are explained below.

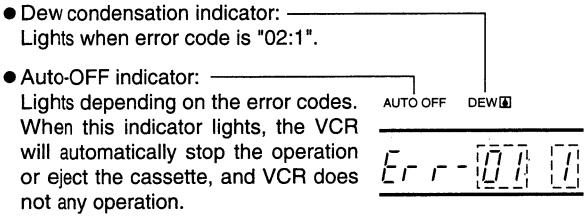

01 : 1 Disconnection or short circuit of LEDs for leader tape detection

- VTR operation: This ejects a cassette. If a cassette is not inserted, one cannot be accepted until the warning is released.
- [AUTO OFF] display in the LCD: Not lit.
- Causes: Disconnection of the tape LED
- How to detect: When the IC601 - pin75 (normally approx. 1.1 V) becomes 250 ms or more and 3 V or more or 0.5 V or less.

02 : 1 Condensation

- VTR operation: It enters the AUTO OFF mode. When a cassette is not inserted, the drum motor starts rotation. When the condensation is cleared, the warning is released automatically and normal operation will start.
- [AUTO OFF] display in the LCD: Lit.
- Causes: Condensation or a malfunction of the DEW sensor
- How to detect: When the DEW sensor output (IC601 - pin73) becomes 3 V or more, it enters the warning mode. When it becomes 2 V or less, the warning is released.

32 : 1 The loading cannot be completed

- VTR operation: It ejects a cassette. When a cassette is inserted again and the loading is completed, the warning is released.
- [AUTO OFF] display in the LCD: Not lit.
- Causes: Malfunction of a mode sensor, a loading motor, an MDA circuit (IC623) or a loading mechanism.
  An inferior of a cassette tape.
- How to detect: The loading cannot be completed within eight seconds when it checks the mode sensor output (IC602 - pin19, 20, 21).

32 : 2 Tape slack during loading

- VTR operation: It ejects a cassette. When a cassette is inserted again and the loading is completed, the warning is released.
- [AUTO OFF] display in the LCD: Not lit.
- Causes: Malfunction of a loading mechanism (Stack of a guide roller)
- How to detect: When the 800 SP reel FG (IC601 - pin62) pulses (= 20 rotation) or more are output during the loading.

33 : 1 Unloading cannot be completed

- VTR operation: It enters the AUTO OFF mode.
- [AUTO OFF] display in the LCD: Lit.
- Causes: Malfunction of a mode sensor, a loading motor, an MDA circuit (IC623) or a loading mechanism.
  An inferior of a cassette tape.
- How to detect: The unloading cannot be completed within eight seconds when it checks the mode sensor output (IC602 - pin19, 20, 21).

56 : 3 SP reel over run due to a tape breakage

- VTR operation: It ejects a cassette. When a cassette is inserted again and the loading is completed, the warning is released.
- [AUTO OFF] display in the LCD: Not lit.
- Causes: Tape breakage due to abnormal tension, insertion of a damaged tape or scratches on the mechanism running parts.
  Abnormal tape winding in a cassette.
- How to detect: When the SP reel FG (IC601-pin 62) becomes a high frequency exceeding the specific limit for 3 seconds or more during the capstan REV mode.

56 : 4 TU reel over run due to tape breakage

- VTR operation: It ejects a cassette. When a cassette is inserted again and the loading is completed, the warning is released.
- [AUTO OFF] display in the LCD: Not lit.
- Causes: Refer to the error code "56 : 3".
- How to detect: When the TU reel FG (IC601-pin 63) becomes a high frequency exceeding the specific limit for 3 seconds or more during the capstan FWD mode.

56 : 5 The simultaneous detection of begin and end of the tape due to a tape breakage

- VTR operation: It ejects a cassette. When a cassette is inserted again and the loading is completed, the warning is released.
- [AUTO OFF] display in the LCD: Not lit.
- Causes: Tape breakage due to abnormal tension, insertion of a damaged tape or scratches on the mechanism running parts.
  A malfunction of the sensor may cause this error due to an exposure to sunlight or incandescence when the unit is used without an outer case.
- How to detect: When both the tape begin sensor (IC601 - pin77) and the tape end sensor (IC601 - pin76) outputs are of a low level during loading.

56 : 6 Tape breakage during unloading

- VTR operation: It ejects a cassette. When a cassette is inserted again and the loading is completed, the warning is released.
- [AUTO OFF] display in the LCD: Not lit.
- Causes: Tape breakage due to abnormal tension, insertion of a damaged tape or scratches on the mechanism running parts.
- How to detect: When the 1200 SP reel FG (IC601 - pin62) pulses (= 30 rotation) or more are output during unloading.

56 : 8 Tape breakage during loading

- VTR operation: It ejects a cassette. When a cassette is inserted again and the loading is completed, the warning is released.
- [AUTO OFF] display in the LCD: Not lit.
- Causes: Refer to the error code "56 : 6".
- How to detect: When only the 20 SP reel FG (IC601 - pin62) pulses (= 1/2 rotation) or less are output during loading.

57 : 1 Short REW cannot be completed

- VTR operation: It ejects a cassette. When a cassette is inserted again and the loading is completed, the warning is released.
- [AUTO OFF] display in the LCD: Not lit.
- Causes: Tape breakage due to abnormal tension, insertion of a damaged tape or scratches on the mechanism running parts.
  A malfunction of the sensor may cause this error due to an exposure to sunlight or incandescence when the unit is used without an outer case.
  Malfunction of the tape end sensor
- How to detect: The tape end sensor output (IC601 - pin76) stays at a low level even when the 100 SP reel FG (IC601 - pin62) pulses (= 2.5 rotations) or more are output in the Short REW mode.
  (Short REW mode: When it detects the tape end soon after a cassette is inserted, it rewinds the tape equivalent to 2.5 rotations of the SP reel with approx. 5x-speed. This operation is called a Short REW mode.)

57 : 2 Skip REV cannot be completed

- VTR operation: It ejects a cassette. When a cassette is inserted again and the loading is completed, the warning is released.
- [AUTO OFF] display in the LCD: Not lit.
- Causes: Refer to the error code "57 : 1".
- How to detect: The tape end sensor output (IC601 - pin76) stays at a low level when the SP reel is rotated for five seconds or more in the Skip REV mode.
  (Skip REV mode: When it detects the tape end at the loading end, it rewinds a leader tape at -1X speed. This operation is called a Skip REV mode.)

57 : 4 Tape end detection during REV running

- VTR operation: It ejects a cassette. When a cassette is inserted again and the loading is completed, the warning is released.
- [AUTO OFF] display in the LCD: Not lit.
- Causes: Refer to the error code "57 : 1".
- How to detect: The tape end sensor output (IC601 - pin76) becomes low level when a tape is wound in the REV direction.

58 : 1 Short FF cannot be completed

- VTR operation: It ejects a cassette. When a cassette is inserted again and the loading is completed, the warning is released.
- [AUTO OFF] display in the LCD: Not lit.
- Causes: Tape breakage due to abnormal tension, insertion of a damaged tape or scratches on the mechanism running parts.
  A malfunction of the sensor may cause this error due to an exposure to sunlight or incandescence when the unit is used without an outer case.
  Malfunction of tape begin sensor
- How to detect: The tape begin sensor output (IC601 - pin77) stays at a low level even when the TU reel is rotated for three seconds and the 50 TU reel FG pulses (= a little more than one rotation) are output in the Short FF mode.
  (Short FF mode: When it detects a tape beginning soon after a cassette is inserted, it first forwards a tape equivalent to the leader tape with approx. 5x-speed. This operation is called a Short FF mode.)

58 : 2 Skip FWD cannot be completed

- VTR operation: It ejects a cassette. When a cassette is inserted again and the loading is completed, the warning is released.
- [AUTO OFF] display in the LCD: Not lit.
- Causes: Refer to the error code "58 : 1".
- How to detect: The tape begin sensor output (IC601 - pin77) stays at a low level when the SP reel is rotated for five seconds or more in the Skip FWD mode.
  (Skip FWD mode: When it detects a tape begin at the loading end, it first forwards a reader tape at normal speed. This operation is called a Skip FWD mode.)

58 : 4 Tape begin detection during FWD running

- VTR operation: It ejects a cassette. When a cassette is inserted again and the loading is completed, the warning is released.
- [AUTO OFF] display in the LCD: Not lit.
- Causes: Refer to the error code "58 : 1".
- How to detect: The tape begin sensor output (IC601 - pin77) becomes low level when a tape is wound to the FWD direction.

70 : 1 Abnormal rotation of a drum motor

- VTR operation: It enter the AUTO OFF mode.
- [AUTO OFF] display in the LCD: Lit. (However, it does not light during loading).
- Causes: Malfunction of a drum motor inside a drum assembly or an MDA circuit.
  Disconnection of a drum assembly.
  Malfunction of a switching regulator circuit (SS/RFP board IC901)
- How to detect: The drum FG (IC601 - pin65) cannot be detected for two seconds or more in the correct drum motor rotation mode.

71 : 1 Abnormal rotation of a capstan motor

- VTR operation: It enters the AUTO OFF mode.
- [AUTO OFF] display in the LCD: Lit.
- Causes: Malfunction of a capstan motor or an MDA circuit inside a capstan motor assembly.
  Disconnection of a capstan motor assembly.
  Malfunction of a switching regulator circuit (SS/RFP board IC901)
- How to detect: Any capstan FG (IC601 - pin 64) pulse is not output for one second or more in the capstan drive mode (PLAY, REC, SEARCH FWD/REV).

72 : 1 Tape is slack at the tape supply side during the capstan drive mode

- VTR operation: It enters the AUTO OFF mode.
- [AUTO OFF] display in the LCD: Lit.
- Causes: Malfunction of a reel motor or a MDA circuit (SS/RFP board IC809, Q809 - Q811).
  Disconnection of the reel motor assembly.
  Malfunction of the switching regulator circuit (SS/RFP board IC901).
  Failure of a reel idler.
- How to detect: Any SP reel FG (IC601 - pin62) pulse is not output while the 6912 capstan FG (IC601 - pin64) pulses (= 4.8 rotation) are generated in the capstan drive mode (PLAY, REC. SEARCH FWD/REV).

72 : 4 SP reel overrun when a cassette is not inserted

- VTR operation: It enters the AUTO OFF mode.
- [AUTO OFF] display in the LCD: Lights.
- Causes: Wrong detection of reel FG because of the interference of pulses.
  Malfunction of reel MDA circuit (SS/RFP board IC809, Q809 – Q811).
- How to detect: When the SP reel FG (IC601 - pin 62) becomes a high frequency exceeding the specific limit for 3 seconds or more without inserting a cassette.

72 : 5 SP reel does not rotate during unloading

- VTR operation: It enters the AUTO OFF mode.
- [AUTO OFF] display in the LCD: Lights.
- Causes: Refer to the error code "72 : 1".
- How to detect: Only 20 SP reel FG (IC601 - pin62) pulses (= 1/2 rotation) are output during unloading.

72 : 7 SP reel does not rotate during Short REW

- VTR operation: It ejects a cassette. When a cassette is inserted again and the loading is completed, the warning is released.
- [AUTO OFF] display in the LCD: Not lit.
- Causes: Refer to the error code "72 : 1".
- How to detect: Only 100 SP reel FG (IC601 - pin62) pulses (= 2.5 rotation) or less are output within five seconds during the Short REW mode.
  (Short REW mode: When it detects the tape end soon after a cassette is inserted, it rewinds the tape equivalent to 2.5 rotations of an SP reel with approx. 5x-speed. This operation is called a Short REW mode.)

73 : 1 Tape slack at the take-up side during the capstan drive mode

- VTR operation: It enters the AUTO OFF mode.
- [AUTO OFF] display in the LCD: Lights.
- Causes: Refer to the error code "72 : 1".
- How to detect: Any TU reel FG (IC601 - pin63) pulse is not output while the 6912 capstan FG (IC601 - pin 64) pulses (= 4.8 rotation) are generated in the capstan drive mode (PLAY, REC, SEARCH FWD/REV).

73 : 4 TU reel overrun without a cassette insertion

- VTR operation: It enters the AUTO OFF mode.
- [AUTO OFF] display in the LCD: Lights.
- Causes: Refer to the error code "72 : 4".
- How to detect: TU reel overruns without inserting a cassette, and the 40 TU reel FG (IC601 - pin63) pulses (= one rotation) or more are output in a second.

73 : 7 SP reel does not rotate during Short FF

- VTR operation: It ejects a cassette. When a cassette is inserted again and the loading is completed, the warning is released.
- [AUTO OFF] display in the LCD: Not lit.
- Causes: Refer to the error code "72 : 1".
- How to detect: The tape begin sensor output (IC601 - pin77) stays at a low level even if the TU reel is rotated for three seconds and the 50 TU reel FG pulses (= a little more than one rotation) or less are output in the Short FF mode.
  (Short FF mode: When it detects a tape beginning soon after a cassette is inserted, it first forwards the tape equivalent to the leader tape with approx. 5x-speed. This operation is called a Short FF mode.)

1.12 EEPROM (VTR)

IC606 on the SS/RFP board is an EEPROM which can erase and write electrically and stores the following data regarding DIAG mode.

Stored data	In EEPROM replacement
[Group 1] Data of hour meter	All data will be reset.
[Group 3] Setting data of the battery alarm/end detection voltage	Returns to the factory setting
[Group 4] Setting data of setup menu (Including menus for users)	Returns to the factory setting
[Group 7] Adjusted data set at the Adjustment mode	Returns to the factory setting
[Group 8] Data regarding to the Warning history	All data will be deleted.
[Group 9] Setting data of the setup menu saved at the DIAG menu "b1"	All data will be deleted.
Model name, serial No. (only to be used at the factory)	All data will be deleted.

Table 1.12 (1) EEPROM stored data

When the EEPROM is replaced, the following adjustment data for the group 7 return to the factory setting applies. Make sure to readjust them again.

(1) DIAG menu No. 5d: Capstan FG duty/gain auto adjustment
(2) DIAG menu No. 5F: Reverse torque adjustment
(3) DIAG menu No. 61: Unloading torque adjustment
(4) DIAG menu No. 62: PLAY torque adjustment
(5) DIAG menu No. 64: Switching point auto adjustment
(6) DIAG menu No. 68: Tracking preset auto adjustment
(7) DIAG menu No. 72: RF record current auto adjustment
(8) DIAG menu No. 86: Battery voltage detection auto adjustment

1.13 LITHIUM BATTERY

DY-90 employs a lithium battery (nominal voltage: 3 V) for the back up of the LCD micro computer. The data to be backed up is explained below.

(1) Time code generator data (With free run mode, it keeps on counting during the execution of back up)
(2) Date/Time data for SUB TC
(3) Continuous recording IN point data
(4) CTL counter data

IC422 on the AUDIO & LCD board performs switching to a lithium battery for backup.
This IC switches the power supply of the LCD micro computer to a lithium battery when the main voltage becomes 4.7 V or less. At this time, IC422 switches the "CS" output to low level, the LCD micro computer switches the clock oscillator to X402 and it will be operated with the sleep mode. Also, the IC422 detects the voltage of the lithium battery. When the voltage become 2.7 V or less, it switches the "PREEND" output to low level, then displays the alarm "Li" on the display.

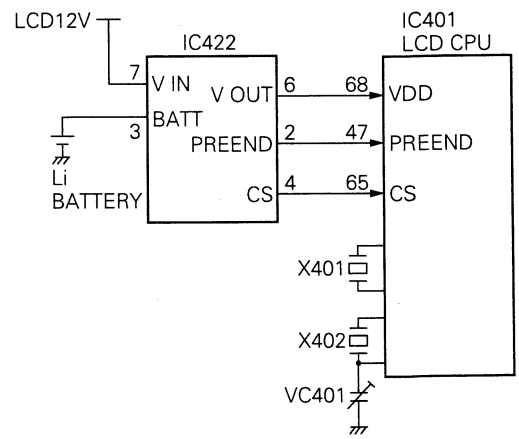

Fig. 1-13-1 Back up circuit

1.14 OPERATIONS OF SWITCHES AND SENSORS

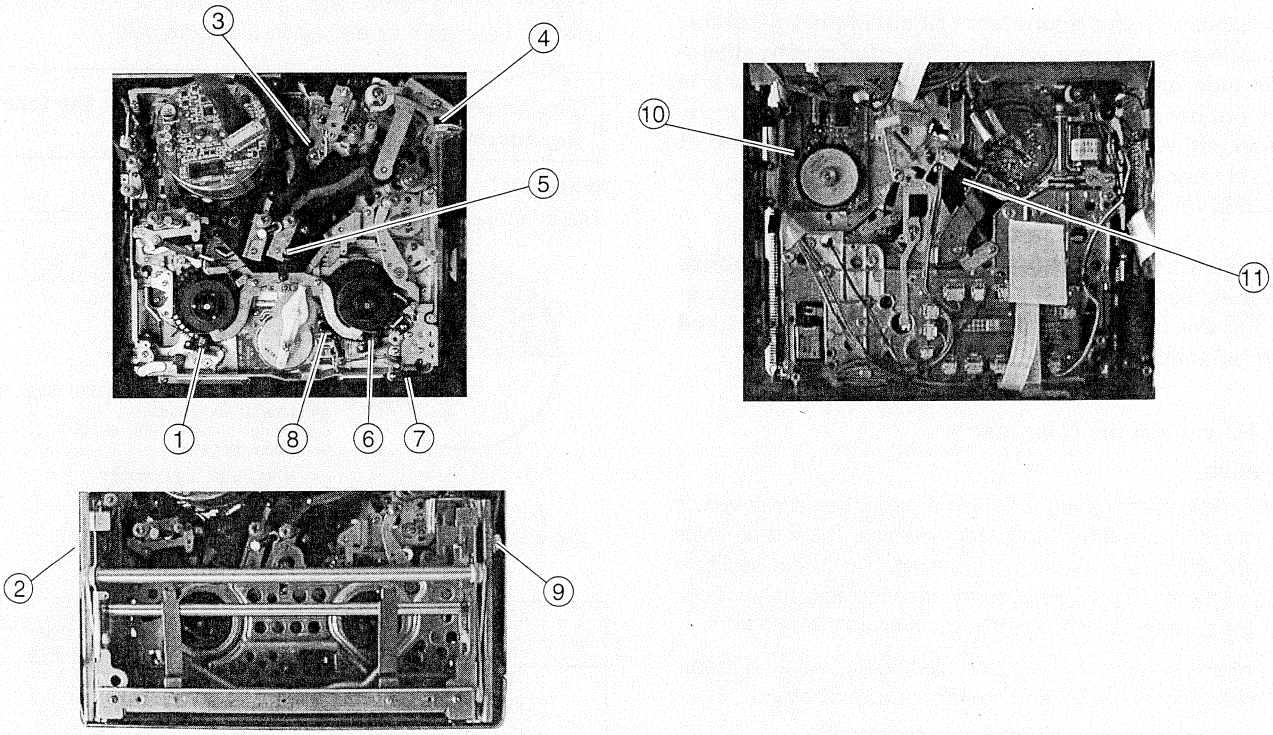

Fig. 1-14-1 Switches and sensors layout

① **Supply reel FG**
40 pulses are output during a cycle of the reel disk.

② **End sensor**
This detects the tape end.

③ **Dew (condensation) sensor**
This detects condensation.

⑤ **After loading sensor**
This detects the mechanism positions together with the mode sensor ⑪ .

⑥ **Tape LED**
This illuminates in order to detect the tape end and beginning.

⑦ **Takeup reel FG**
This detects the rotation of a takeup reel.
40 pulses are output during a cycle of the reel disk.

⑦ **Cassette switch**
Three switches are built in.
Outside switch : It detects pits for mis-erase prevention.
Center switch : It detects a digital S cassette.
Inside switch : Not used.

⑧ **Housing lock switch**
Detects the opening and closing of a cassette housing.

⑨ **Begin sensor**
Detects a tape beginning.

⑩ **Capstan MR**
Generates sine waves with a frequency proportional to the rotation speed with a 2-phase output rotation sensor using MR elements.

⑪ **Mode sensor**
Detects mechanism positions and outputs three different signals as explained in Fig. 1.14.2.

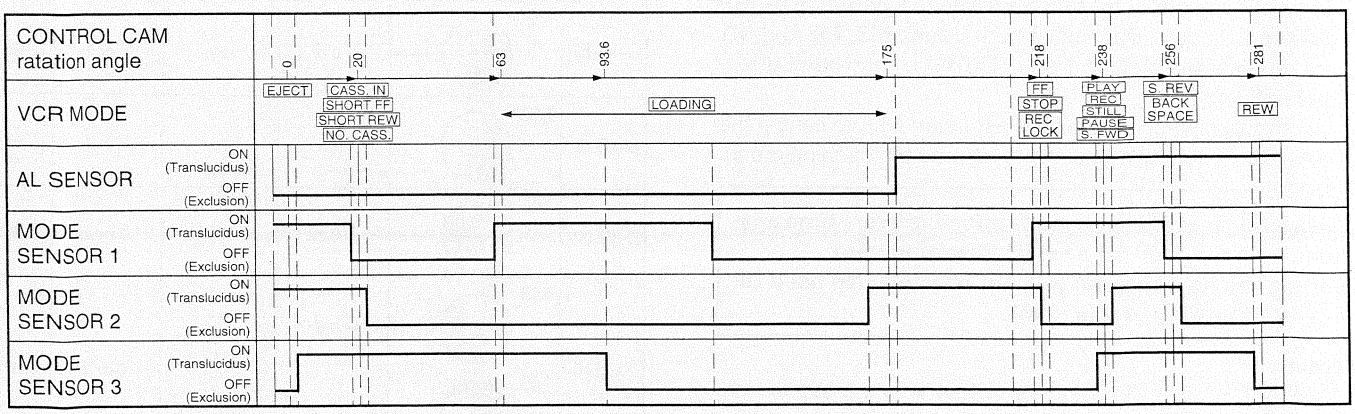

Fig. 1-14-2 Functions of Mode/AL sensors

1.15 How to adjust the color matrix setting

Precautions:

It is possible with the color matrix circuit in the DSP of this unit to alter the color reproduction characteristics by changing the nine different parameter settings. However, it is usually not necessary to change them because each one is set to an initial value which has been carefully selected at the development stage. Such parameter changes are not included in the normal electrical adjustment items.

If such adjustments are still necessary, perhaps in response to a request by a customer, the adjustment procedures described in the subsequent sections should be first studied and understood before being carried out.

1.15.1 How to set the color matrix

Preparation

For color matrix setting, you will need a color chart and a vector scope as a reference for any color reproduction. There is no color chart specified for use in a color matrix setting. Use the one selected by your customer who wishes you to make the adjustment. Fully discuss the customer's needs before carrying out the setting.

A color matrix setting can be accomplished by selecting menu items appearing on the VF and monitor output displays.

MODE	:	M3	M2	M1	DATA
R±(R-G)	:	※	※	※	※
R±(R-B)	:	※	※	※	※
G+(G-R)	:	X	※	※	※
G–(G-R)	:	※	X	※	※
G+(G-B)	:	X	※	※	※
G–(G-B)	:	※	X	※	※
B+(B-G)	:	X	※	※	※
B–(B-G)	:	※	X	※	※
B±(B-R)	:	※	※	※	※

Fig. 1-15-1 Color matrix adjustment display

Follow the steps given below to enable setting.

(1) Remove the right-hand side cover (See 1.3.1)
(2) Turn the dip switch S1-6 on the CP board to ON, and the color matrix setting menu will appear on the viewfinder and monitor output displays.
(3) Move the cursor (blinking character) to the desired item with S11 (ITEM SW) and S12 (SET SW).
(4) Carry out adjustments with S9 (DOWN SW) and S10 (UP SW) on CP board. The adjustment values M3, M2 and M1 are represented by 0 or 1 and "DATA" by any number between 0 and 31.
(5) Turn the dip switch S1-6 on the CP board OFF to cancel the color matrix setting menu and to resume the opening menu.

NOTE

The setting is stored and made effective every time any number is changed for a selected setting item.
Setting the item marked X is not possible (No need to attempt a setting of this item).

Precaution

S13 (MENU SW) on CP board serves as a data reset switch. Pressing this switch during setting causes all the data entered to be cleared, resetting to the initial values.

1.15.2 Details of the individual setting items

9 parameters can be used, as described above, to change 12 different setting items when color matrix setting. Setting details for these items are given in the Table below.

NOTE

The graphic models in the Table represent the following information.

(Example)

The chart below shows an image display on the vector scope.

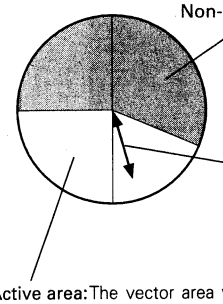

MODE	Graphical representation in the ACTIVE area	M3 0 : Active 1 : Inactive	M2 0 : Active 1 : Inactive	M1 0 : Increase 1 : Decrease	DATA 0 – 31
R±(R-G)	M3 → 0 or 1 M2 → 0 or 1			0 or 1	※
R±(R-B)	M3 → 0 or 1 M2 → 0 or 1			0 or 1	※
G+(G-R)	M2 → 0 or 1	×		0 or 1	※
G–(G-R)	M3 → 0 or 1		×	0 or 1	※
G+(G-B)	M2 → 0 or 1	×		0 or 1	※
G–(G-B)	M3 → 0 or 1		×	0 or 1	※
B+(B-G)	M2 → 0 or 1	×		0 or 1	※
B–(B-G)	M3 → 0 or 1		×	0 or 1	※
B±(B-R)	M3 → 0 or 1 M3 → 0 or 1			0 or 1	※

Table 1-15-1

SECTION 3
ELECTRICAL ADJUSTMENT

This section only describes the camera part of ELECTRICAL ADJUSTMENT.
On servicing, refer to the service manual (No. 9360R) for DY-90 together with this.

3.1 ELECTRICAL ADJUSTMENT FLOWCHART

3.1.1 Electrical adjustment flowchart for camera section

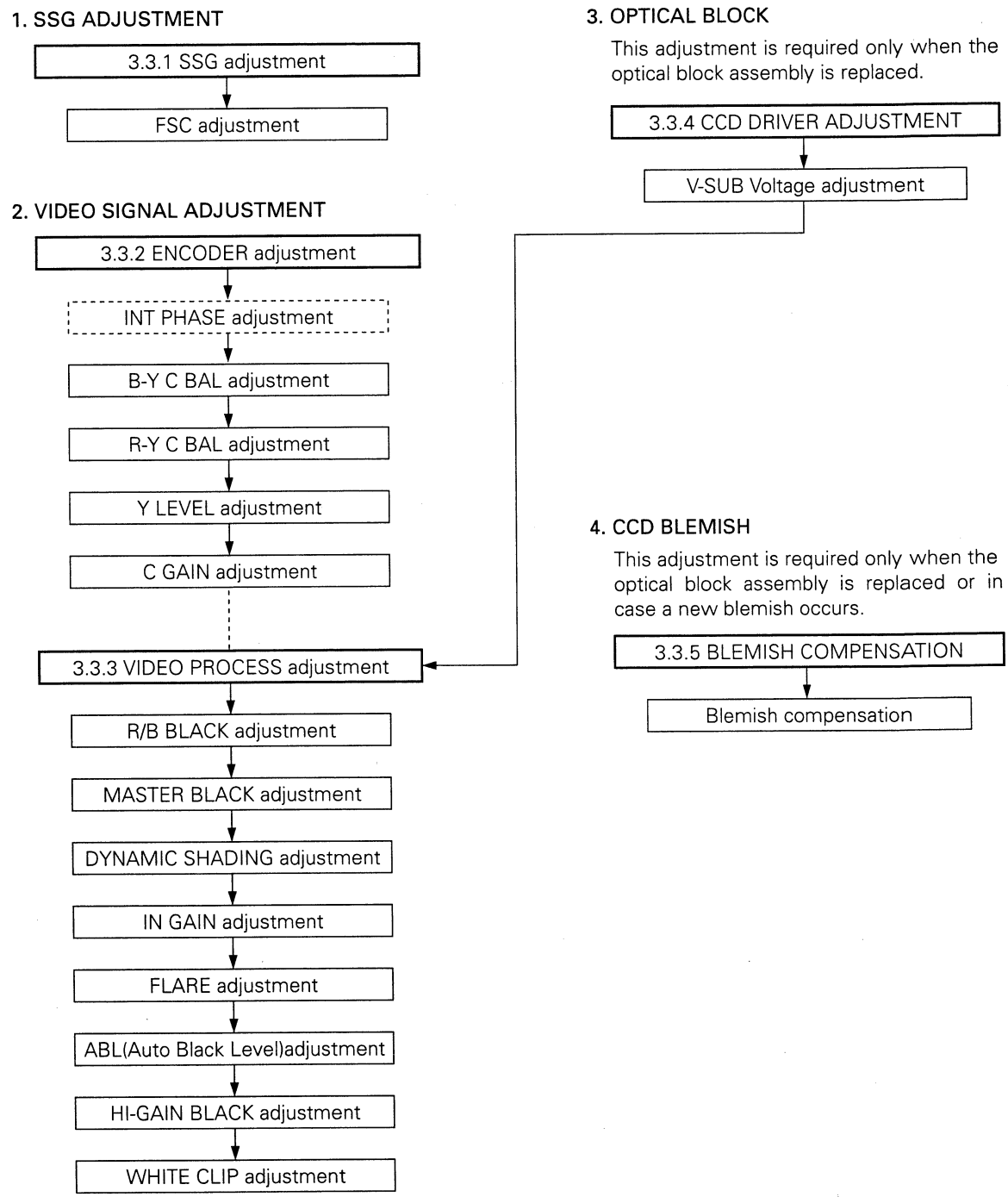

3.1.2 Electrical adjustment flowchart for video section

Note: These Electrical adjustment for video section are same as DY-90, refer to the service manual (No. 9360R) for these adjustment.

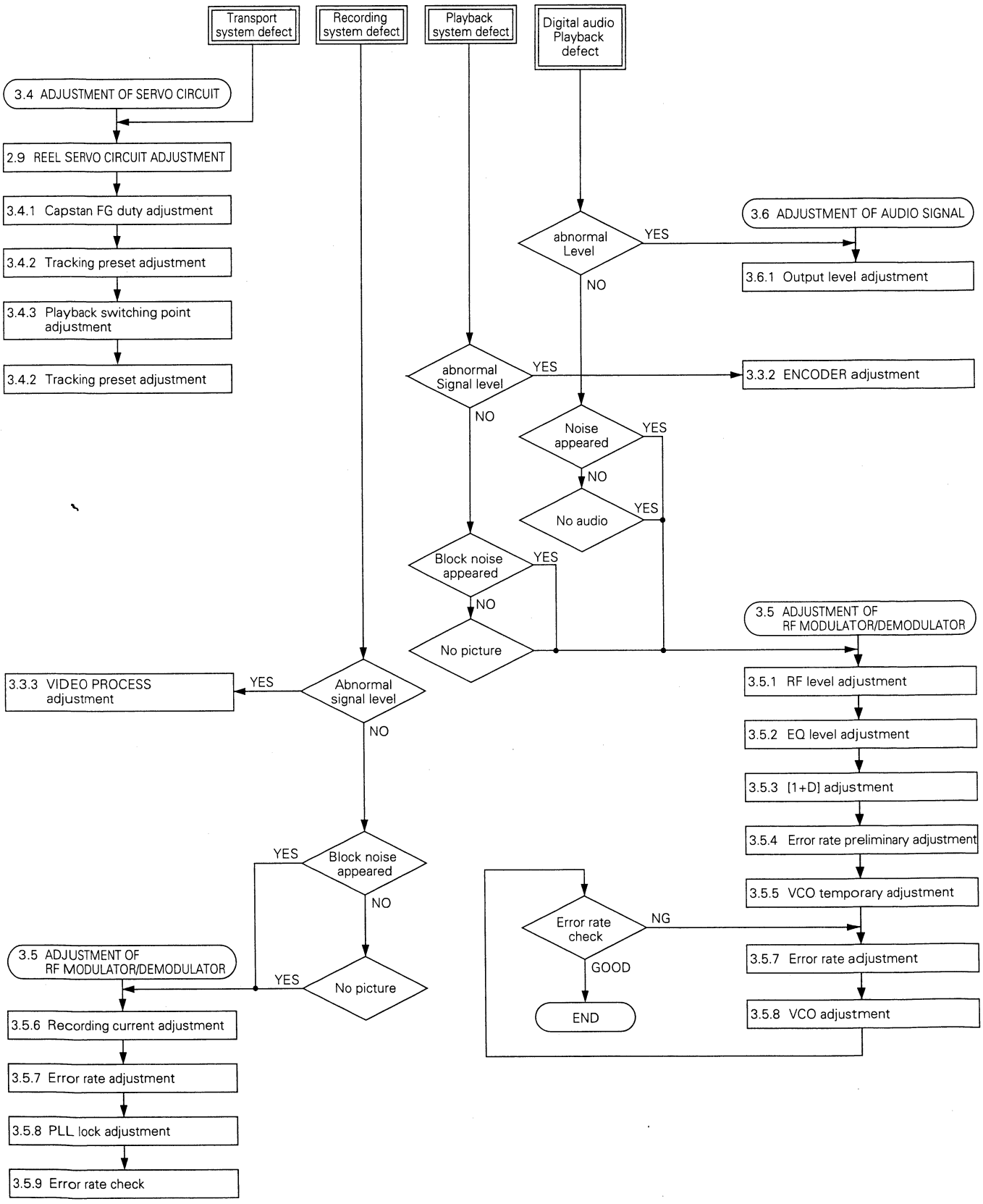

3.2 REQUIRED MEASURING INSTRUMENTS FOR ADJUSTMENT, STANDARD SETUP

3.2.1 Precautions on electrical adjustment

1. The electrical adjustment procedures described in this chapter apply to the cases that replacement of video heads or expendable parts of the mechanism needs electrical adjustment, there is something abnormal in output video signal, and there is a failure in the electrical circuit.
   Before proceeding to adjust an item appearing in this chapter, make sure to check that the objective item is out of the specifications.
2. For any item or part that needs mechanism adjustment before electrical adjustment, check to see whether it has undergone required mechanism adjustment or not before electrical adjustment.
3. Check and adjustment require this set to be equipped with all the boards.
4. Don't cut off the power supply to this set by turning off the power switch or other means whenever the tape is travelling, otherwise the tape may be damaged.
5. When a warning message appears, immediately turn off the power switch, and then investigate the cause and remove it. Before trying to turn on the set again, confirm that the cause of the warning message has completely been removed.
6. Start electrical adjustment at least 10 minutes after the VCR has been turned on.
   Regarding an oscilloscope to be used for measurement, use the 10:1 probe.

3.2.2 Test instruments required for adjustment

Instrument	Condition	Instrument	Condition
Oscilloscope	Capable of measuring 100MHz or higher bands and calibrated.	DC power supply	AA-P250 or equivalent
Oscilloscope *	Capable of measuring 300MHz or higher bands and calibrated. * (This oscilloscope is used in Section 3.5, "ADJUSTMENT OF RF MODULATOR/DEMODULATOR CIRCUIT").	Lighting apparatus	3,200K halogen lamp
		Color video monitor TV	
Frequency counter	Readable in 8 or more digits. Constancy of 0.1ppm/ 1×10^{-7} or more at 0°C to 40°C.	Waveform monitor (WFM)	
Digital voltmeter	Input impedance of 10MΩ or more, and calibrated.	Digital S tape	For use in self-recording/playback.
Vectorscope	Must be calibrated, and capable of measuring 0-setup signals.	Lens	Fujinon A16 x 9B12U or equivalent
Audio tester	Must be calibrated.		
		Viewfinder	VF-P116W or equivalent
Spectrum analyzer	Must be calibrated. (This is not required when the BR-D92, BR-D80 or BR-D85 is available.)		

3.2.3 Special implements required for adjustment

1 Tripod base	2 Gray scale chart	3 Alignment tapes	4 Adjusting driver
<KA-510 or equivalent>	<Part No. GS2L>	(Refer to 3.2.4)	YTU93004-2
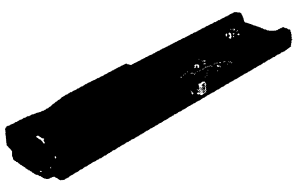	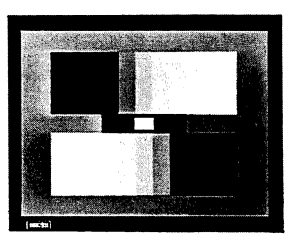	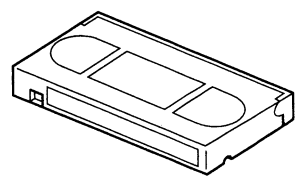	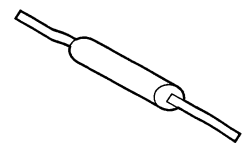

3.2.4 Alignment tape specifications

MSHP-X

Video Signal	Audio Signal	Recording Time (min.)	Applications
Color bar (1 track per frame does not contain video.)	–	50	X-value adjustment and tracking preset adjustment.

MSHV-1

Video Signal	Audio Signal	Time (min.)	Applications
Motion picture	Music sound	50	• Tracking preset adjustment • Playback switching point adjustment • RF modulator/demodulator system adjustments

MS-1 [NTSC]

No.	Video Signal	Audio Signal	Time (min.)	Applications
1	Color bar	1 kHz/–20dBFs	10	• Video system adjustments
2	Pulse & bar		5	
3	Multi-burst		5	• Audio system adjustments
4	Bow-tie		5	

MS-2 [PAL]

No.	Video Signal	Audio Signal	Time (min.)	Applications
1	Motion picture	Music sound	15	
2	Colour bar		10	• Video system adjustments
3	Pulse & bar	1 kHz/–20dBFs	5	
4	Multi-burst		5	• Audio system adjustments
5	Bow-tie		5	

3.2.5 Standard setup for adjustment (For Camera adjustment)

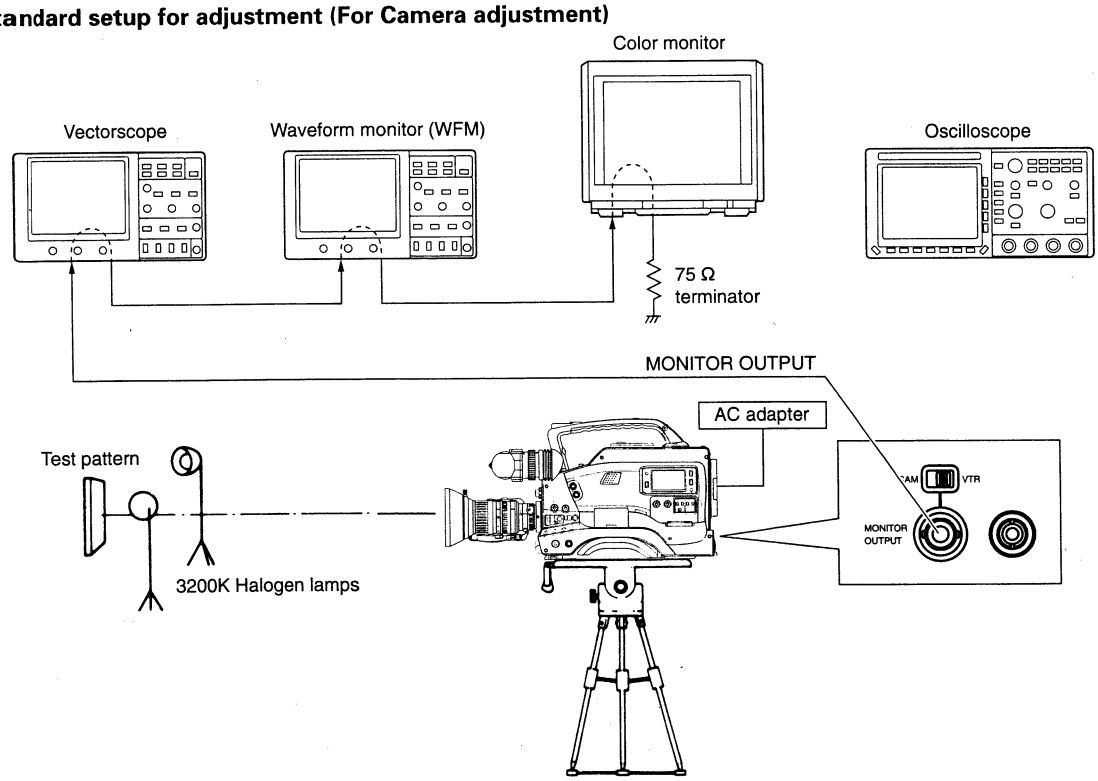

3.2.6 Simultaneous display in both viewfinder and monitor

If the POWER switch is turned on while the DOWN button on the right side panel is pressed together, the same display as shown in the viewfinder also appears on the monitor screen.
For cancelling this condition of simultaneous display in both viewfinder and monitor, turn the POWER switch off once and again turn it on to restore the set to the normal display mode.

3.2.7 Adjustment procedure in the adjustment mode

Some of the adjustment items should be adjusted in the "adjustment mode".
The adjustment mode allows to select an item on the monitor screen and adjust all of the required adjustments by using one potentiometer. The functions affected by each adjustment item are set automatically and the mechanical switch settings may be ignored. The adjustment procedure in the adjustment mode is described below.

(1) Remove the right side cover. (See Section 1.3.1)
(2) Set S1-1 on the CP board to ON to activate overlay display.
(3) Select the adjustment item by pushing S9 and/or S10 on the CP board. (A blinking cursor is displayed on the left of selected item.)
(4) Adjust the selected item with VR6 (ALARM control potentiometer) on the CP board. The adjusted value is displayed in the range between -128 and 127 or between -25 and 25.
(5) Setting S1-1 to OFF terminates the adjustment mode and returns the monitor to the normal screen.

When the cursor is moved to another item or S1-1 is set to OFF, the adjusted data is stored in EEPROM (IC7 on the CP board). The data is then delivered to the camera when the power is turned on.

***NOTE**

In the adjustment mode, the reference values are automatically set to necessory parameters when adjusting. Adjust items sequentially from top to bottom of the menu display.

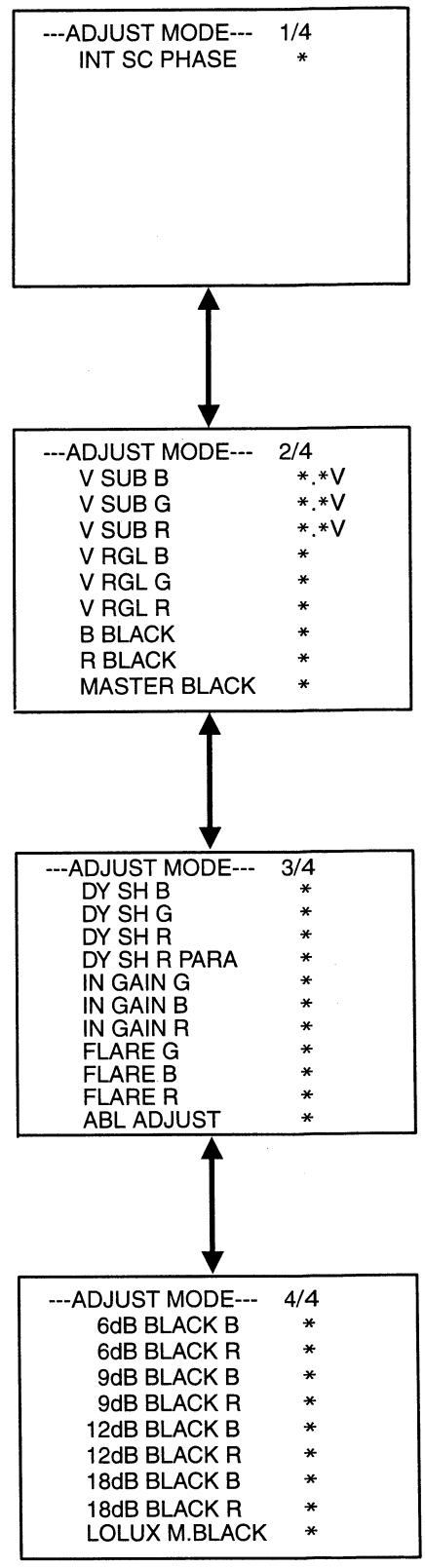

3.2.8 Service menu

Some of the adjustment items should be adjusted in the "SERVICE MENU".

(1) Set POWER switch to ON while pushing up the AUTOWHT. SW to initiate the SERVICE MENU.

(2) Select the SERVICE item with ITEM button on the CP board.

— SERVICE MENU —	
CCD CORRECT	ON
ERROR DETECT	START
WHITE CLIP	109%

3.2.9 Potentiometers and test point layout

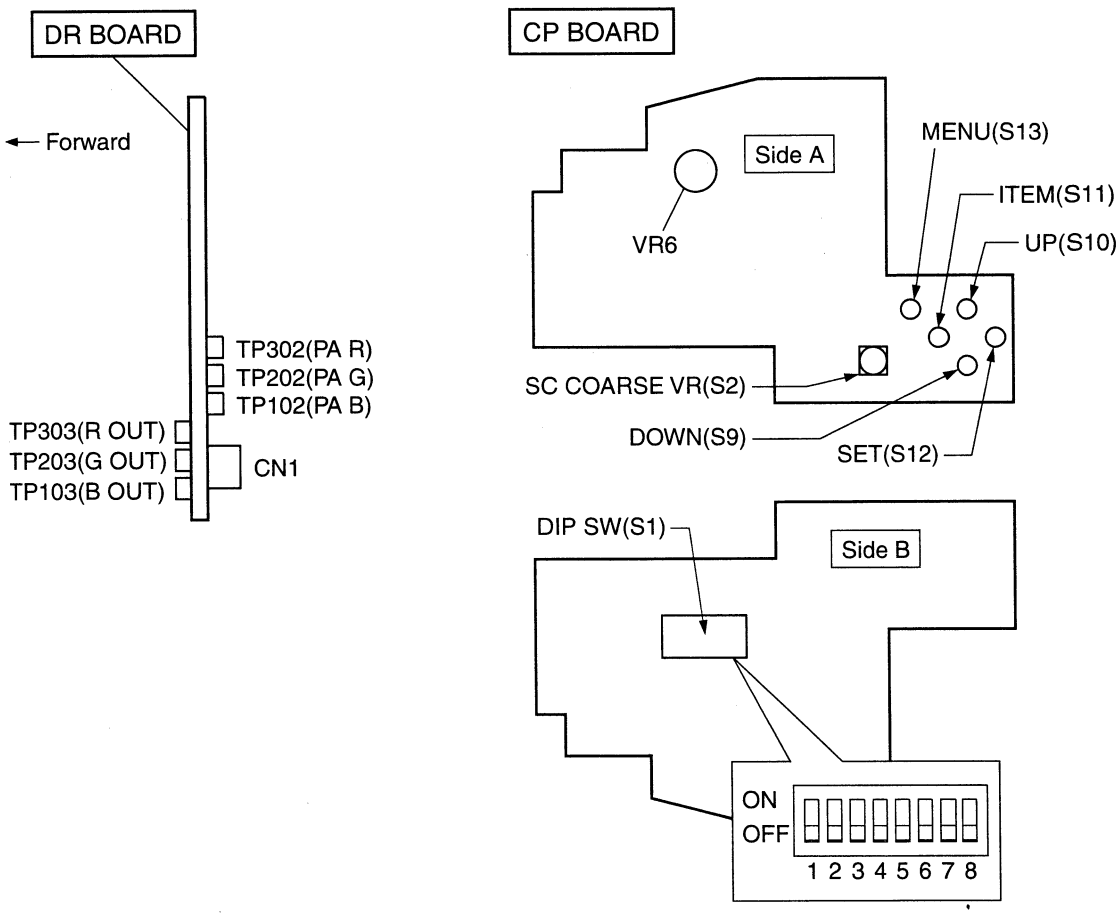

MAIN BOARD

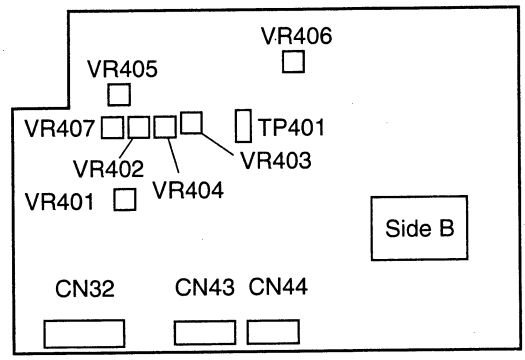

AUDIO/LCD BOARD

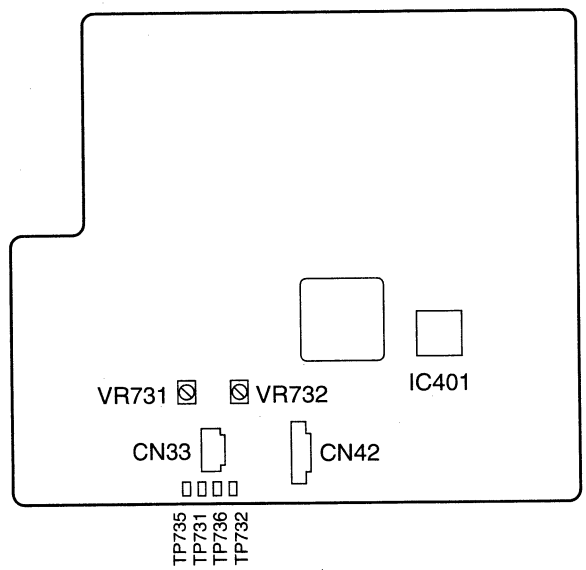

SS/RFP BOARD

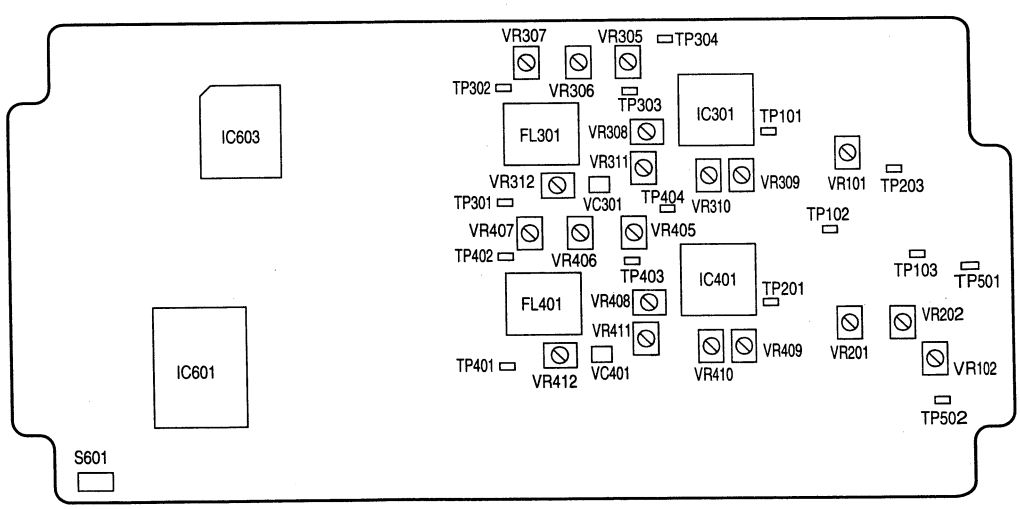

No.	Item	Measuring instruments & Input signals	Mode	Measuring point (◎) Adjustment parts (⊕) Adjustment level (☆)	Adjustment procedure

3.3 ADJUSTMENT OF CAMERA PART

3.3.1 SSG adjustment

• Confirm that no external sync is input to Genlock-in.					
1	Fsc adjustment	• Frequency counter		◎ TP401 [MAIN] ⊕ VR406 [MAIN] <NTSC> ☆ 3,579,545±10Hz <PAL> ☆ 4,433,618±10Hz	(1) Adjust so that the SC frequency at the measurement point becomes equal to the specified level.

3.3.2 ENCODER adjustment

1	INT SC PHASE adjustment	• Vectorscope with SC-H measuring facility	• ADJUST MODE ↓ "INT SC PHASE" (Color bar output)	◎ MONITOR OUTPUT terminal (75 Ω terminated) ⊕ VR6 [CP] ☆ 0°	• This adjustment is usually not necessary to be done. Perform it only when it is required to do so, as after replacement of EEPROM. If the SC-H measuring instrument is not available, set the adjustment value to 0. • When perform the adjustment, confirm that no external sync is input to the camera. (1) Set to the adjustment mode and select "INT SC PHASE". (2) Set the vectorscope to SC-H mode. (3) Adjust the PHASE knob for the phase adjustment of the vectorscope and set the burst signal to the correct position. (4) Read the position of the sync dot on the outer dial scale and perform the coarse adjustment with the SC COARSE SW in the Function Box of the main unit. (In adjustment mode, the SC COARSE SW functions as an internal SC COARSE control.) (5) Adjust with VR6 so that the sync dot is positioned in the measured value.
2	B-Y C BAL adjustment	• Oscilloscope (H-rate)	• Color bar output	◎ MONITOR OUTPUT terminal (75Ω terminated) ⊕ VR402 [MAIN] ☆ Min. carrier leaks	(1) Output the color bar signal. (2) Adjust to minimize the carrier leaks in the white and black sect ions of the color bars.

Sync dot

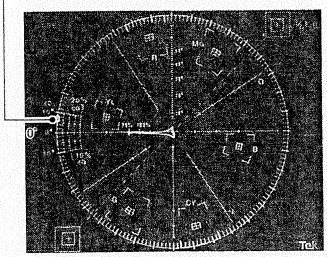

[NTSC]

Sync dot

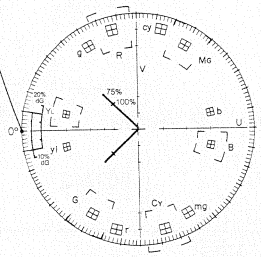

[PAL]

White level

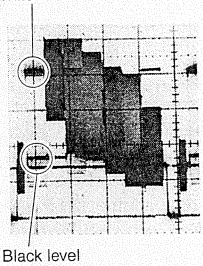

Black level

[NTSC]

White level

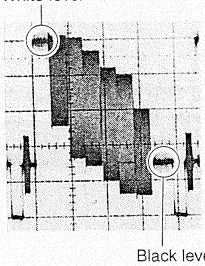

Black level

[PAL]

No.	Item	Measuring instruments & Input signals	Mode	Measuring point (◎) Adjustment parts (ⓣ) Adjustment level (☆)	Adjustment procedure
3	R-Y C BAL adjustment	• Oscilloscope (H-rate)	• Color bar output	◎ MONITOR OUTPUT terminal (75Ω terminated) ⓣ VR403 [MAIN] ☆ Min. carrier leaks	(1) Output the color bar signal. (2) Adjust to minimize the carrier leaks in the white and black sect ions of the color bars.
4	Y LEVEL adjustment	• Oscilloscope (H-rate)	• Color bar output	◎ MONITOR OUTPUT terminal (75Ω terminated) ⓣ VR401 [MAIN] <NTSC> ☆ 0.714 Vp-p <PAL> ☆ 0.7 Vp-p	(1) Adjust so that the Y level of compsite signal at the measurement point becomes equal to the specified level.
5	C GAIN adjustment	• Oscilloscope (H-rate)	• Color bar output	◎ MONITOR OUTPUT terminal (75Ω terminated) ⓣ VR405 [MAIN] <NTSC> ☆ 0.286 Vp-p <PAL> ☆ 0.3 Vp-p	(1) Output the color bar signal. (2) Adjust so that the output signal burst level at the measurement point becomes equal to the specified level.

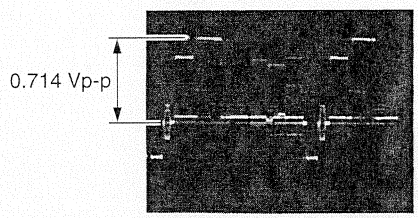

[NTSC]

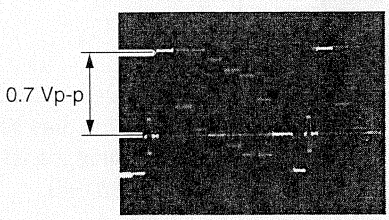

[PAL]

No.	Item	Measuring instruments & Input signals	Mode	Measuring point (◎) Adjustment parts (⊕) Adjustment level (☆)	Adjustment procedure

3.3.3 VIDEO PROCESS adjustment

1	B/R BLACK adjustments	• Oscilloscope (H-rate) or WFM • Lens cap	• ADJUST MODE ↓ "B BLACK" ↓ "R BLACK" (Iris closed)	◎ MONITOR OUTPUT terminal (75Ω terminated) ⊕ VR6 [CP] ☆ Min. carrier leaks (less than 15mVp-p)	(1) Initiate the adjustment mode and select "B BLACK". (2) Adjust to minimize the waveform carrier leak at the measurement point (less than 15 mVp-p). (3) Select "R BLACK". (4) Perform the same adjustment as step (2).
2	MASTER BLACK adjustment	• Oscilloscope (H-rate) or WFM • Lens cap	• ADJUSTMENT MODE ↓ "MASTER BLACK" (Iris closed)	◎ MONITOR OUTPUT terminal (75Ω terminated) ⊕ VR6 [CP] <NTSC> ☆ 0.05 Vp-p (7.5 IRE) <PAL> ☆ 0 Vp-p	(1) Initiate the adjustment mode and select "MASTER BLACK". (2) Adjust so that the master black level at the measurement point is equal to the specified level.
3	DYNAMIC SHADING adjustment	• Oscilloscope (V-rate) or WFM • Gray scale chart (Just scan)	• ADJUST MODE • "DY SH B" ↓ "DY SH G" "DY SH R" "DY SH R PARA"	◎ MONITOR OUTPUT ⊕ VR6 [CP] ☆ "0" ◎ MONITOR OUTPUT ⊕ VR6 [CP] ☆ Min. carrier leaks	(1) Shoot the gray scale chart and set the lens iris so that the white level becomes to 0.57 Vp-p (80 IRE). (2) Select "DY SH B" and set the adjustment value to "0". (3) Select "DY SH G" and adjust to minimize the carrier leak at measurement point of the white section of gray scale chart. (4) Select "DY SH R" and perform the same operation as step (7). (5) Check that the carrier leak at BLACK is minimize. If the BLACK carrier is not so minimize, then readjust the "B BLACK", "R BLACK" adjustment.

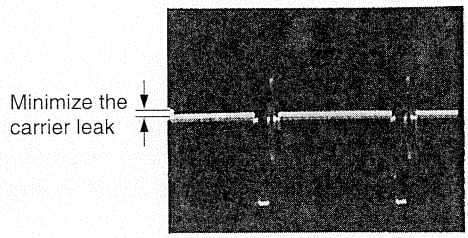

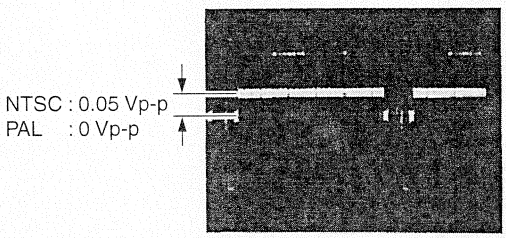

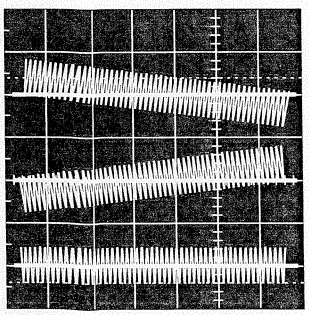

No.	Item	Measuring instruments & Input signals	Mode	Measuring point (◎) Adjustment parts (ⓣ) Adjustment level (☆)	Adjustment procedure
4	IN GAIN adjustments	• Oscilloscope (H-rate, 10:1) • Gray scale chart (Just scan)		◎ TP1 [ISG] ⓣ Lens iris ☆ 470 mVp-p	(1) Shoot the gray scale. (2) Adjust the lens iris so that the gray scale waveform level at the measurement point is equal to the specified level.
		• Oscilloscope (H-rate) or WFM • Gray scale chart (Just scan)	• ADJUST MODE ↓ "IN GAIN G"	◎ MONITOR OUTPUT terminal (75Ω terminated) ⓣ VR6 [CP] <NTSC> ☆ 0.714 Vp-p (100 IRE) <PAL> ☆ 0.7Vp-p	(3) Initiate the adjustment mode and select "IN GAIN G". (4) Adjust so that the gray scale waveform level at the measurement point is equal to the specified level.
		• Oscilloscope (H-rate) or WFM • Gray scale chart (Just scan)	• ADJUST MODE ↓ "IN GAIN B" ↓ "IN GAIN R"	◎ MONITOR OUTPUT terminal (75Ω terminated) ⓣ VR6 [CP] ☆ Min. carrier leaks (less than 15 mVp-p)	(5) Initiate the adjustment mode and select "IN GAIN B". (6) Adjust to minimize the carrier leak at the measurement point of the white section of the gray scale chart. (7) Select "IN GAIN R" and perform the same adjustment as step (6).

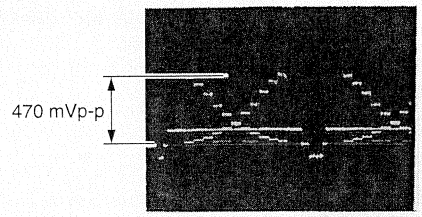

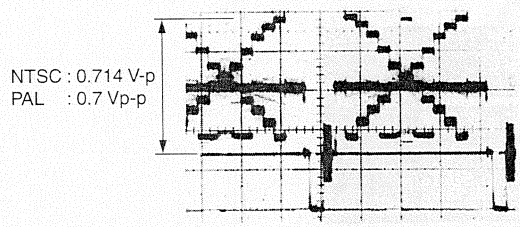

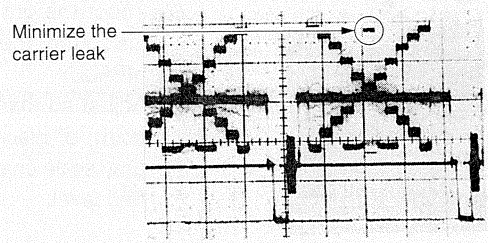

No.	Item	Measuring instruments & Input signals	Mode	Measuring point (◎) Adjustment parts (ⓣ) Adjustment level (☆)	Adjustment procedure
5	FLARE adjustment	• Oscilloscope (H-rate) or WFM • Gray scale chart (Just scan)	• ADJUST MODE ↓ "FLARE G"	◎ MONITOR OUTPUT terminal (75Ω terminated) ⓣ VR6 [CP]	(1) Initiate the adjustment mode and select "FLARE G". (2) Shoot the gray scale chart and set the lens iris so that the cross point level is equal to 0.714 Vp-p [100 IRE](NTSC)/0.7Vp-p(PAL). (3) Check that the data value is "0".
		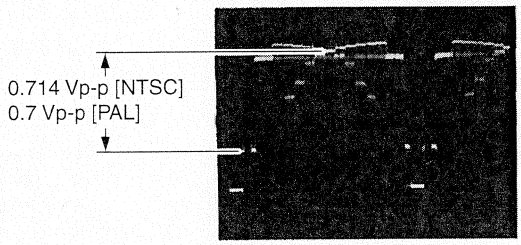			
		• Oscilloscope (H-rate) • Gray scale chart (Just scan)	• ADJUST MODE ↓ "FLARE B" ↓ "FLARE R"	◎ MONITOR OUTPUT terminal (75Ω terminated) ⓣ VR6 [CP] ☆ Min.carrier leaks (less than 20mVp-p)	(4) Select "FLARE B" and adjust to minimize the carrier leak of the black section at the center of the gray scale chart. (5) Select "FLARE R" and perform the same adjustment as step (5).
		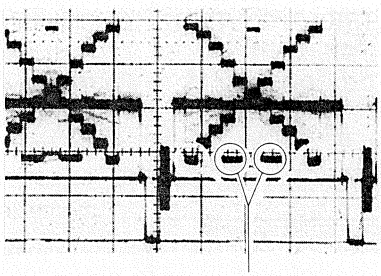			
6	ABL (Auto Black Level) adjustment	• Oscilloscope (H-rate) or WFM • Gray scale chart (Just scan)	• ADJUST MODE ↓ "ABL ADJUST"	◎ MONITOR OUTPUT terminal (75Ω terminated) ⓣ VR6[CP] <NTSC> ☆ "0"	<NTSC> (1) Initiate the adjustment mode and select "ABL ADJUST". (2) Set the adjustment value to "0". <PAL> (1) Initiate the adjustment mode and select "ABL ADJUST". (2) Shoot the gray scale chart and set the lens iris so that the white level is equal to 0.7 Vp-p(PAL). (3) Adjust so that the level, at the measurment point, of black section at the center of the gray scale chart becomes equal to the specified level.
		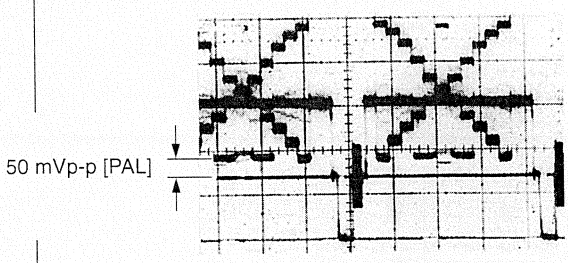		<PAL> ☆ 50 mVp-p	

No.	Item	Measuring instruments & Input signals	Mode	Measuring point (◎) Adjustment parts (ⓣ) Adjustment level (☆)	Adjustment procedure
7	HI-GAIN BLACK adjustment	• Vectorscope • LENS cap	• ADJUST MODE ↓ "6dB BLACK B" "6dB BLACK R" ↓ "9dB BLACK B" "9dB BLACK R" ↓ "12dB BLACK B" "12dB BLACK R" ↓ "18dB BLACK B" "18dB BLACK R"	◎ MONITOR OUTPUT terminal (75Ω termination) ⓣ VR6 [CP] ☆ Noise dot become center	(1) Put LENS cap or adjust the lens iris to close position. (2) Set the GAIN VR on vectorscope to maximam. (3) Initiate the adjustment mode. (4) Select "6dB BLACK B", "6dB BLACK R" and adjust so that the noise dot become center position of the vectorscope. (5) Select "9dB BLACK B", "9dB BLACK R" and perform the same operation as step (4). (6) Select "12dB BLACK B", "12dB BLACK R" and perform the same operation as step (4). (7) Select "18dB BLACK B", "18dB BLACK R" and perform the same operation as step (4).
					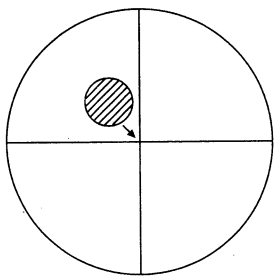 [NTSC] 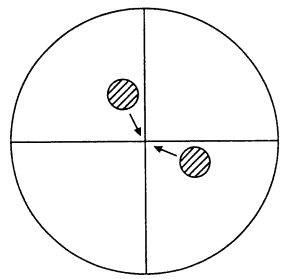 [PAL]
8	WHITE CLIP adjustment	• Viewfinder	• SERVICE MENU ↓ "W. CLIP"	◎ Viewfinder ☆ 109%	**Note:** **The white clip has been adjusted at 109% as initial setting. Re-adjust white clip level according to procedure, when required.** (1) Set POWER SW to ON while pushing up the AUTO WHT. SW to initiate the SERVICE MENU and select "W. CLIP". (2) Set the white clip LEVEL to "109%". (3) Set AUTO WHT. SW to ON to store the "W. CLIP" data value.

No.	Item	Measuring instruments & Input signals	Mode	Measuring point (◎) Adjustment parts (ⓣ) Adjustment level (☆)	Adjustment procedure

3.3.4 CCD driver adjustment

The following adjustments are required only when the optical block assembly is replaced.					
1	V-SUB voltage adjustments	• Oscilloscope • Monitor TV • Gray scale • 85 W Halogen lamp	• ADJUST MODE ↓ "V SUB B" ↓ "V SUB G" "V SUB R" ↓ "V RGL B" "V RGL G" "V RGL R"	◎ MONITOR OUTPUT terminal ⓣ VR6 [CP]	(1) Set the S1-1 on the CP board "ON" to set the ADJUST MODE. (2) Adjust so that V-SUB voltage of each channel becomes equal to the value (alphabet) specified on the label of the optical block. (3) Adjust so that the V RGL voltage of each channel becomes equal to the value specified on the label of the optical block. (4) Set the S1-1 "OFF" and return to the normal screen.

3.3.5 BLEMISH compensation

This camera incorporates a CCD blemish compensation function using an electronic memory. When the optical block assembly is replaced or in case a new blemish occurs, a renewed setting is required according to the following procedure. Note that the maximum number of compensated blemish is up to 13. (Compensated sequentially from the higher-level to the lower-lever blemishes).

1	Blemish compensation	• Video monitor	• SERVICE MENU ↓ "ERROR DETECT START"	◎ MONITOR OUTPUT connector (75Ω terminated)	Before adjust blemish compensation, run the camera for more than 2 hours under an ambient temperature between +25 and +30°C. (1) Set POWER SW to ON while pushing up the AUTO WHT. SW to imitiate the SERVICE MENU. (2) Place the cursor on "ERROR DETECT START" using the [ITEM] button. (3) Press the [SET] button. (4) The monitor screen shows "ERROR DETECT READY" then "ERROR DETECT EXECUTING" and the blemish compensation starts. (5) When blemishes have been detected, the monitor shows "ERROR DETECT END" and the detected blemish data is compensated. (6) After completion of the blemish compensation, the monitor screen returns to the normal screen.

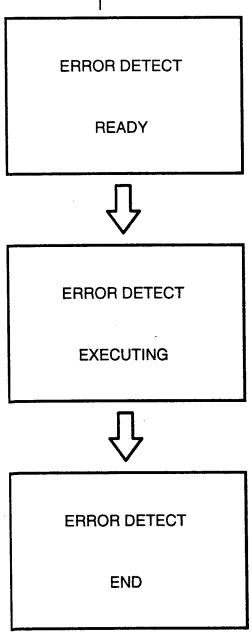

SECTION 4
CHARTS AND DIAGRAMS

- This section only describes the circuit boards that are different from the DY-90.
  On servicing, refer to the service manual (No. 9360R) for DY-90 together with this.

■ SCHEMATIC DIAGRAM NOTES

- **Schematic safety precaution**
  ⚠ Parts are safety related parts.
  When replacing them, be sure to use the specified parts.
- **Voltage and waveform measurements**
  Voltage: Measured with digital voltmeter in DC range; iris closed in REC mode.
  Value in ( ) is indicated only in the case PB voltage is different from that in REC mode.
  Waveform: Gray scale illuminated at more than 4000 lux at 3200K lighting.
- **Unit of value**
  Unless otherwise specified
  1) Resistance is in Ω (1/6 W)
  2) Capacitance is in μF
  3) Inductance is in μH

- **Expression of wiring**

As the following circuit diagram is divided to print on some sheets, such an indication as the following is found in the case the wiring extends over two or more divided sections.

1) Circuit diagram divided into two or more sections:

Board	Board Name	Number of divided sections
0 6	MAIN	1/10 – 10/10

2) Indication of wiring which extends to another section:
(Example)

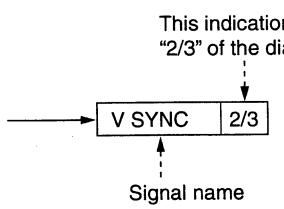

In the above case, the end of the wiring is connected to the "V SYNC" on the 2nd section of the diagram.

- **Wiring of connector**
  (Example)

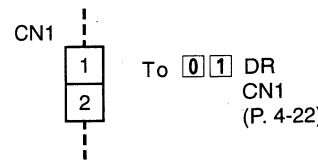

In the above example, CN1 is connected with CN1 on 0 1 DR board.

- **Signal flow on the diagram**
  The following allow marks indicate the specified signal paths respectively.

  ➡ : Recording or EE signal path
  ⇨ : Playback signal ptah
  ➡ : Recording and Playback signal path

- **Others**

In regard of a board assembly whose circuit is composed of multilayered board patterns such 4- or 6-layered patterns, board patterns of the power supply lines and grounding lines are omitted in this section.

Note: For detail of each electrical part, refer to Section 6 "ELECTRICAL PARTS LIST" by it symbol number.

■ REPLACING SURFACE MOUNT "CHIP" COMPONENTS

- Some resistors, shorting jumpers (0 Ω resistance), ceramic capacitors, transistors, and diodes are chip parts. These chip parts cannot be reused after they are once removed.
- Chip resistors used in some circuits are of high precision type having little error in resistance.
  To demonstrate the full capacity of this set, place an order for proper parts referring to the diagrams and parts lists in the section 5.
- Soldering cautions:
  1) Do not apply heat for more than 3 seconds.
  2) Avoid using a rubbing stroke when soldering.
  3) Discard removed chips; do not reuse them.
  4) Supplementary cementing is not required.
  5) Use care not to scratch or otherwise damage the chips.

■ CHIP PARTS PIN ARRANGEMENT

[1] Digital transistors

DTC 1 □□□□
① ②③

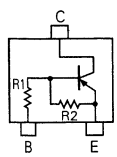

(Top view)

DTA 1 □□□□
DTB 1 □□□□
① ②③

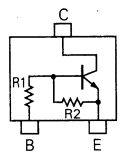

(Top view)

① Two digits show resistance of R1 in abbreviation.
- 43 : 4.7 kΩ
- 14 : 10 kΩ
- 24 : 22 kΩ
- 44 : 47 kΩ

② Roman letter show the resistive ratio between R1 and R2 in abbreviation.
- E : R2/R1 = 1/1
- Y : R2/R1 = 5/1
- W : R2/R1 = 2/1
- X : R2/R1 = 1/2
- T : R2 is opened.

③ Symbol the shape of resistor in abbreviation.

[2] Chip transistors and chip F.E.T.s

2SA □□□□
2SB □□□□

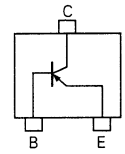

(Top view)

2SC □□□□
2SD □□□□

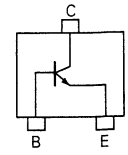

(Top view)

2SK □□□□

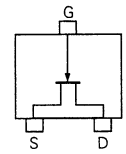

(Top view)

2SJ □□□□

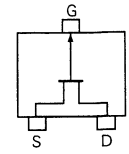

(Top view)

[3] Chip diodes

MA143A/MA742

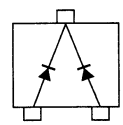

(Top view)

MA142WA

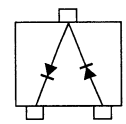

(Top view)

MA142A

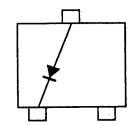

(Top view)

4.10 DR CIRCUIT BOARD (INNER PATTERN)

– INNER PATTERN (SIDE A) –

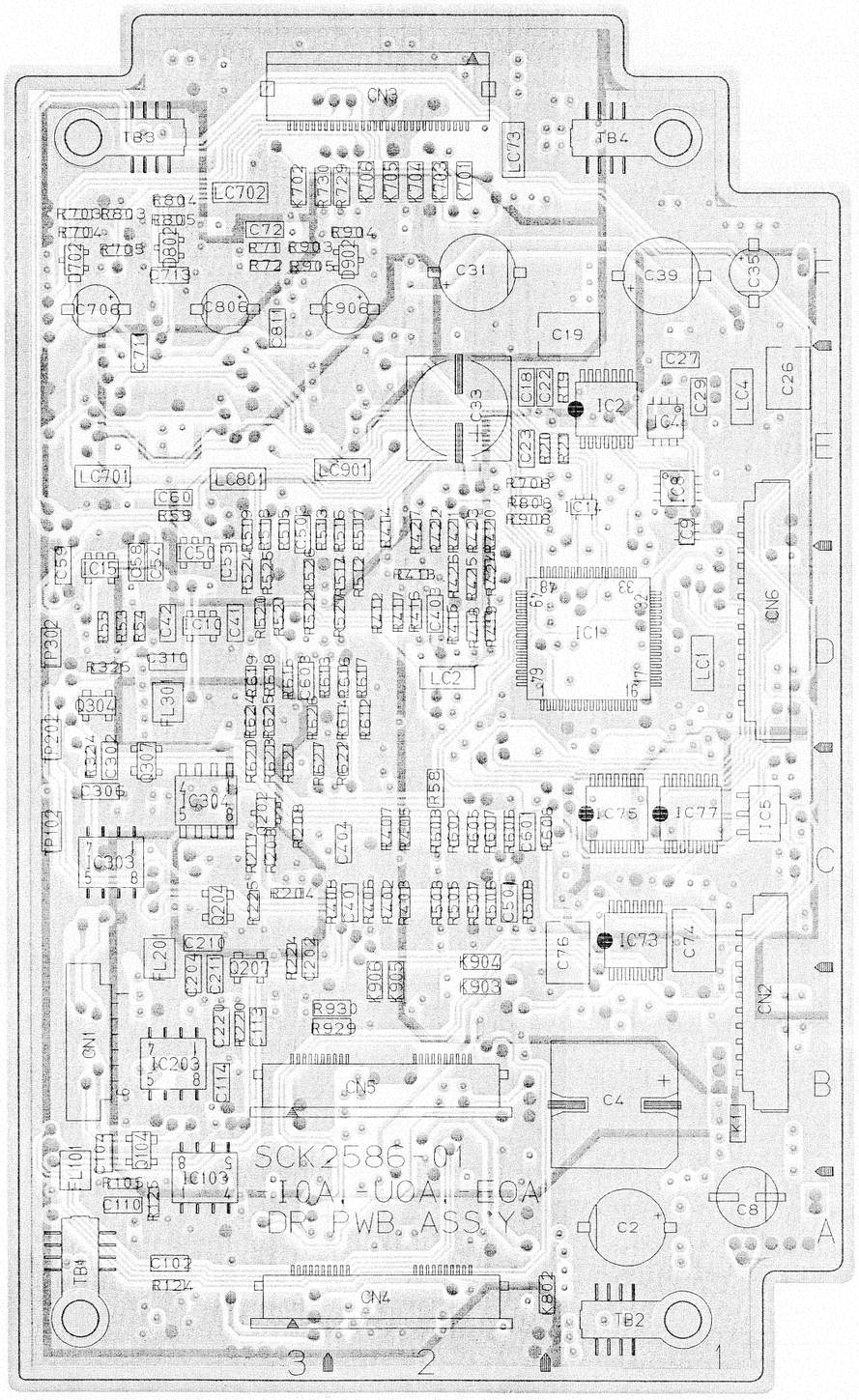

– INNER PATTERN (SIDE B) –

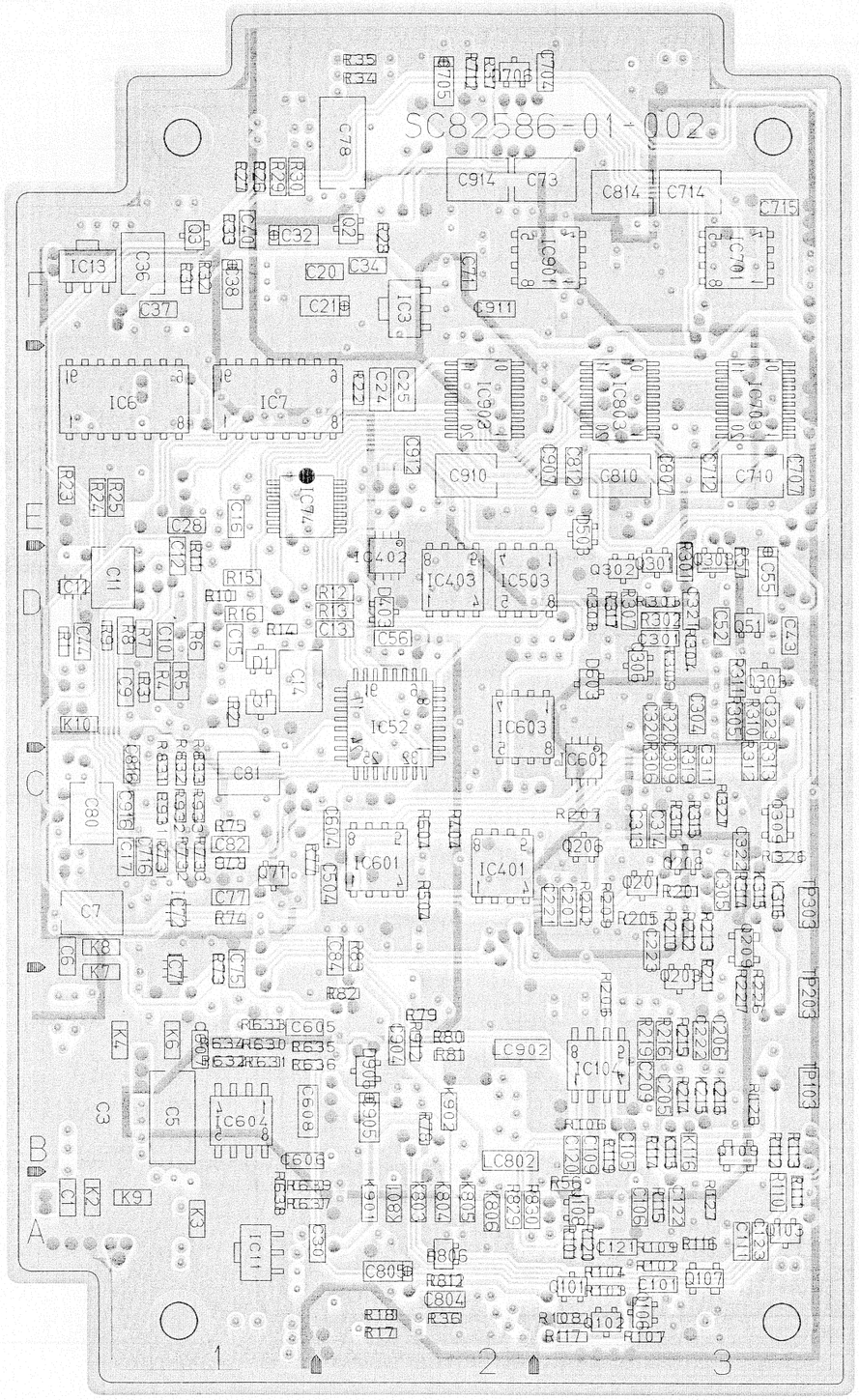

4.11 DR SCHEMATIC DIAGRAM

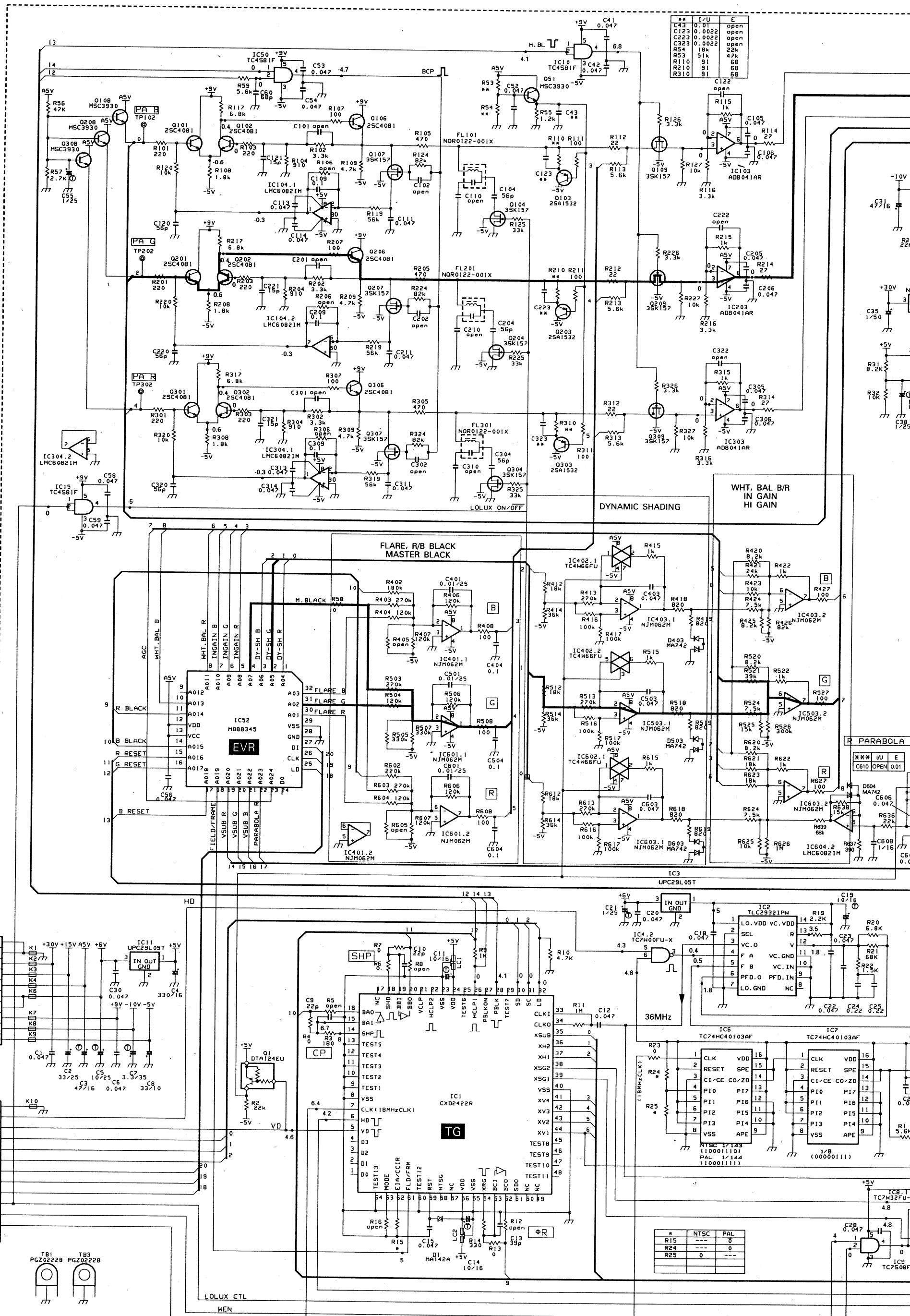

**	I/U	E
C43	0.01	open
C123	0.0022	open
C223	0.0022	open
C323	0.0022	open
R54	18k	22k
R53	51k	47k
R110	91	68
R210	91	68
R310	91	68

***	I/U	E
C610	OPEN	0.01

*	NTSC	PAL
R15	---	0
R24	---	0
R25	0	---

TB2 PGZ02228
TB4 PGZ02228

K115,116
K215,216
K315,316
NQR0265-

B OUT TP103
G OUT TP203
R OUT TP303

DYNAMIC SHADING

WHT, BAL B/R
IN GAIN
HI GAIN

R PARABOLA SHADING CORRECT

IC10 TC4S81F
IC103 AD8041AR
IC203 AD8041AR
IC303 AD8041AR
IC13 NJM78L20UA
IC703 UPD16510GR
IC803 UPD16510GR
IC903 UPD16510GR
IC701.1 NJM062M
IC701.2 NJM062M
IC901.1 NJM062M
IC901.2 NJM062M
IC402.1 TC4W66FU
IC402.2 TC4W66FU
IC602.1 TC4W66FU
IC602.2 TC4W66FU
IC403.1 NJM062M
IC403.2 NJM062M
IC503.1 NJM062M
IC503.2 NJM062M
IC603.1 NJM062M
IC603.2 NJM062M
IC604.1 LMC6082IM
IC604.2 LMC6082IM
IC3 UPC29L05T
IC5 UPC29L05T
IC2 TLC2932IPW
IC4.1 TC7W00FU-X
IC4.2 TC7W00FU-X
IC6 TC74HC40103AF
IC7 TC74HC40103AF
IC8.1 TC7W32FU-X
IC8.2
IC9 TC7S08FU-X
IC12 TC7S08FU-X
IC14 TC74SH04FU
IC71 TC7SH00FU-X
IC72 TC7SH00FU-X
IC74.1 TC74VHC02FT
IC74.2
IC74.3
IC74.4
IC73.1 TC74VHC04FT
IC73.2
IC73.3
IC73.4
IC73.5
IC73.6
IC75.1 TC74VHC74FT
IC75.2
IC77.1 TC74VHC08FT
IC77.2
IC77.3
IC77.4
Q2 2SB1219
Q3 2SD1820
Q021 DTA124EU
Q051 MSC3930
Q103 2SA1532
Q109 3SK157
Q203 2SA1532
Q209 3SK157
Q303 2SA1532
Q309 3SK157
D403 MA742
D503 MA742
D604 MA742
D702 MA142A
D802 MA142A
D902 MA142A
D806 MA142A
D906 MA142A
D706 MA142A

36MHz
(18MHzCLK)
NTSC 1/143 (10001110)
PAL 1/144 (10001111)
1/8 (00000111)
LOLUX 1/4MCK
BCP1
CP
SHP B
SHP G
SHP R
LOLUX CTL
+5V:Normal
-5V:LOLUX
HI

K701,703-706
K801,803-806
K901,903-906
K702,802,902
SCV2662-0
NQR0292-0

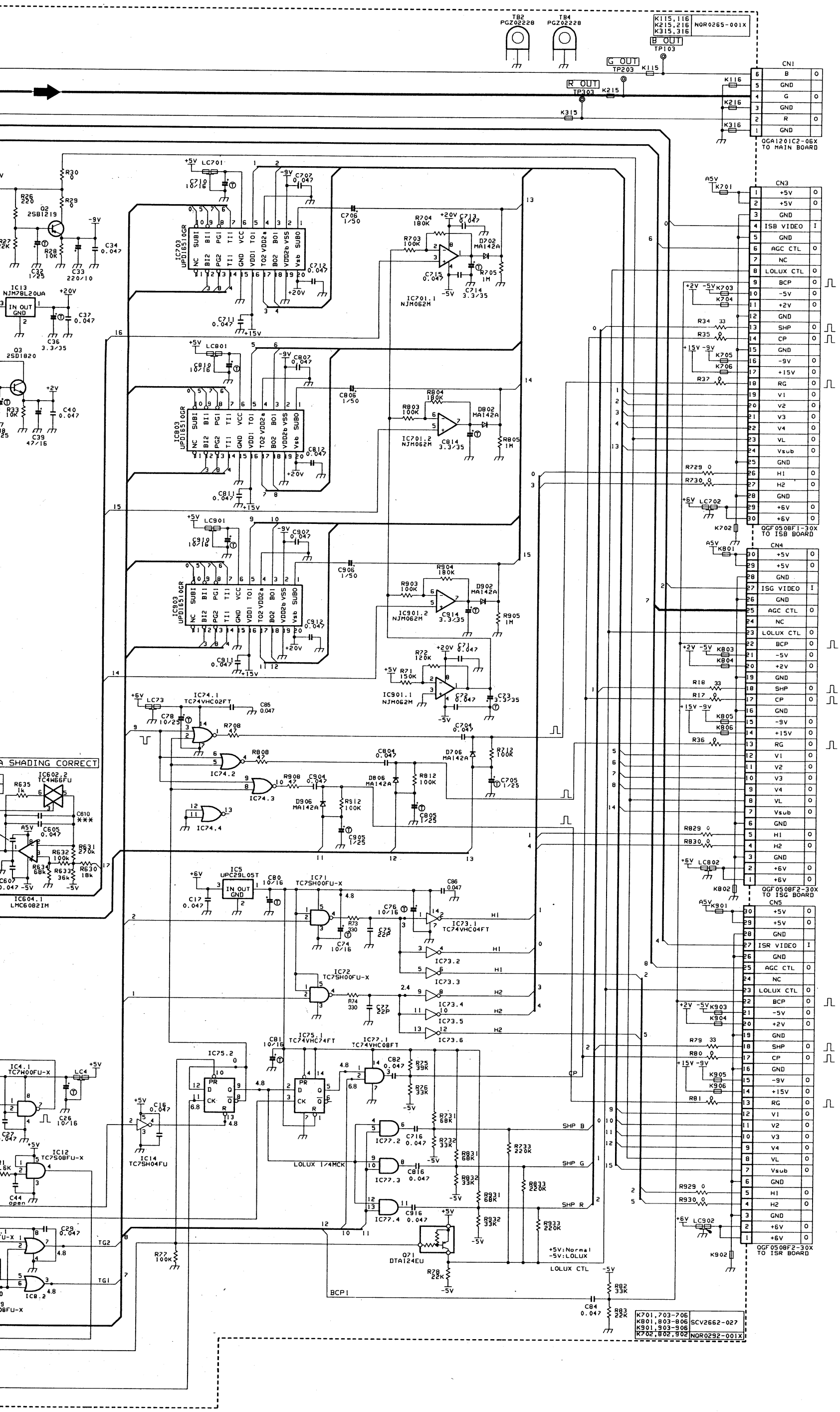

TB2 PGZ02228
TB4 PGZ02228
K115,116 K215,216 K315,316 NOR0265-001X
B OUT TP103
G OUT TP203
R OUT TP303
CN1
QGA1201C2-06X TO MAIN BOARD
CN3
QGF0508F1-30X TO ISB BOARD
CN4
QGF0508F2-30X TO ISG BOARD
CN5
QGF0508F2-30X TO ISR BOARD
IC703 UPD16510GR
IC803 UPD16510GR
IC903 UPD16510GR
IC701.1 NJM062M
IC701.2 NJM062M
IC901.2 NJM062M
IC901.1 NJM062M
IC74.1 TC74VHC02FT
IC74.2
IC74.3
IC74.4
IC602.2 TC4W66FU
IC604.1 LMC6082IM
IC5 UPC29L05T
IC71 TC7SH00FU-X
IC72 TC7SH00FU-X
IC73.1 TC74VHC04FT
IC73.2
IC73.3
IC73.4
IC73.5
IC73.6
IC75.1 TC74VHC74FT
IC77.1 TC74VHC08FT
IC75.2
IC14 TC7SH04FU
IC4.1 TC7W00FU-X
IC12 TC7S08FU-X
IC8.2
Q71 DTA124EU
LOLUX 1/4MCK
+5V:Normal
-5V:LOLUX
LOLUX CTL
BCP1
SHP B
SHP G
SHP R
A SHADING CORRECT
K701,703-706 K801,803-806 K901,903-906 K702,802,902 SCV2662-027 NOR0292-001X

4.12 DR CIRCUIT BOARD

— SIDE A —

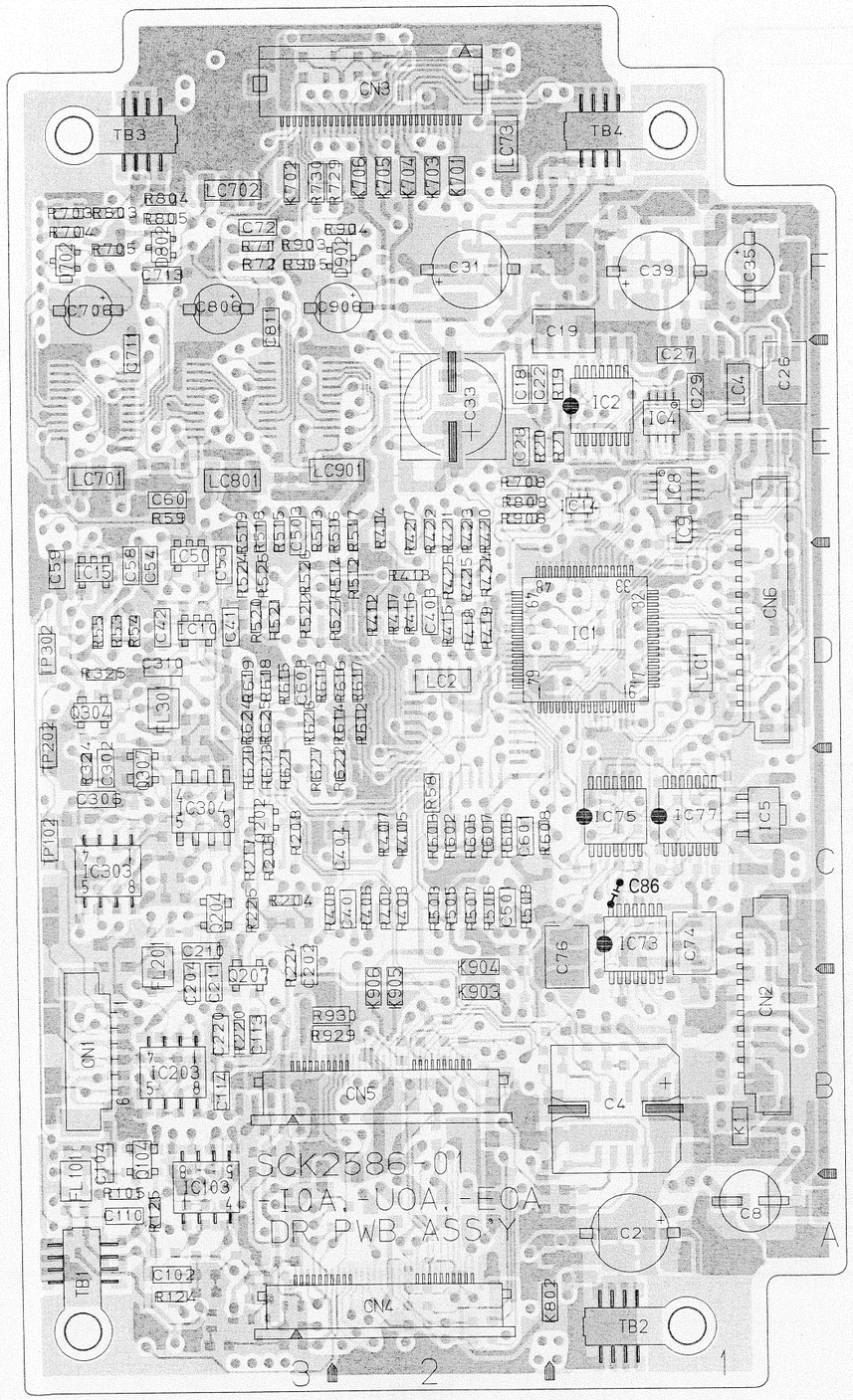

— SIDE B —

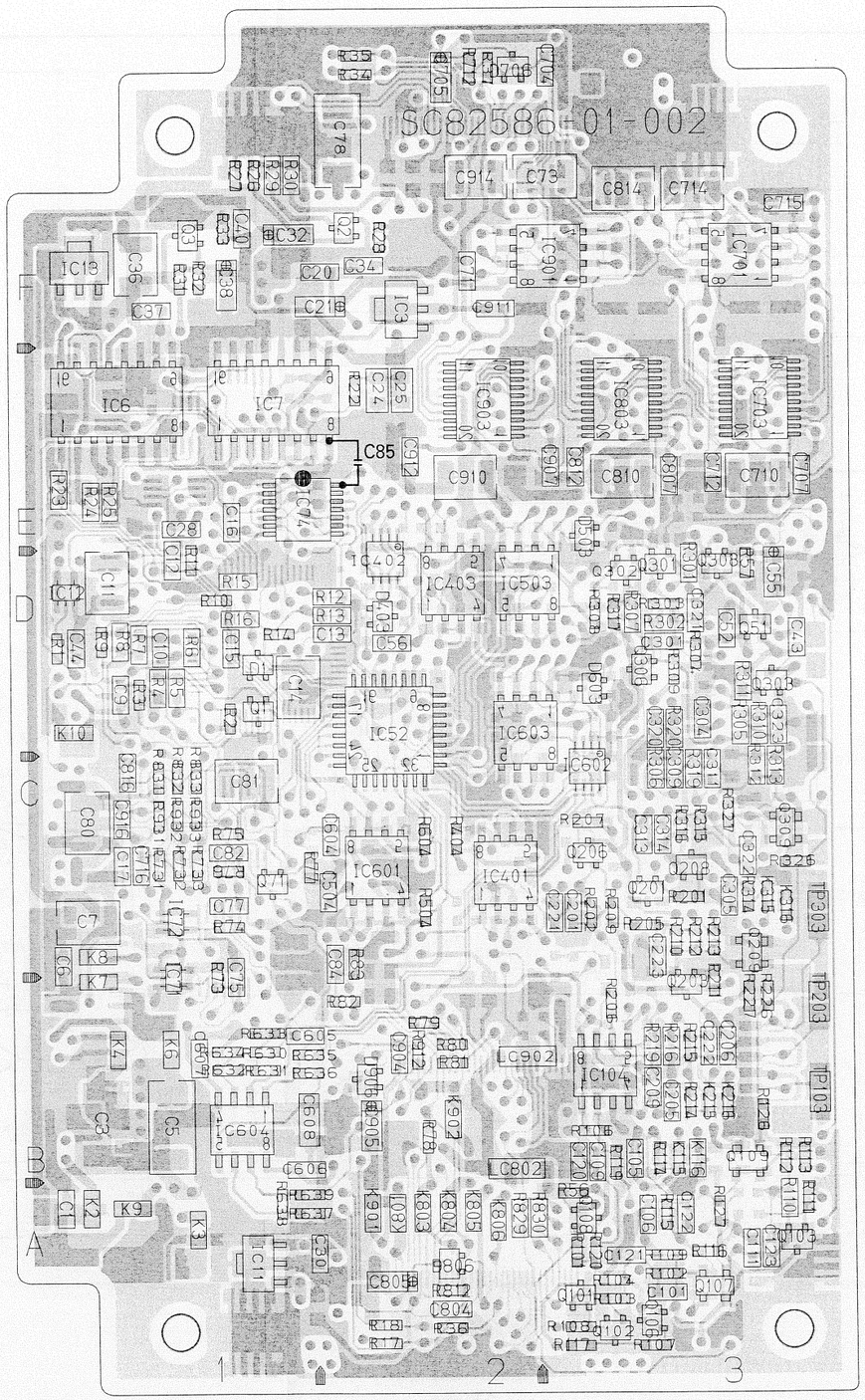

● **ADDRESS TABLE OF BOARD PARTS**

Each address may have an address error by one interval.

A-1C
Side — Y axis
X axis

IC1	A-1D	R11	B-1D	R301	B-3D	R633	B-1B	C74	A-1B	TP103	B-3B				
IC2	A-1E	R12	B-1D	R302	B-3D	R634	B-1B	C75	B-1B	TP202	A-3C				
IC3	B-2E	R13	B-1D	R303	B-3D	R635	B-1B	C76	A-1B	TP203	B-3B				
IC4	A-1E	R14	B-1D	R304	B-3D	R636	B-1B	C77	B-1B	TP302	A-3D				
IC5	A-1C	R15	B-1D	R305	B-3C	R637	B-1A	C78	B-1F	TP303	B-3B				
IC6	B-0D	R16	B-1D	R306	B-3C	R638	B-1A	C80	B-1C						
IC7	B-1E	R17	B-2A	R307	B-2D	R639	B-1A	C81	B-1C	K1	A-1A				
IC8	A-1D	R18	B-2A	R308	B-2D	R703	A-3E	C82	B-1C	K2	B-1A				
IC9	A-1D	R19	A-1E	R309	B-3C	R704	A-3E	C84	B-1B	K3	B-1A				
IC10	A-3D	R20	A-1D	R310	B-3C	R705	A-3E	C101	B-3A	K4	B-1B				
IC11	B-1A	R21	A-1D	R311	B-3C	R708	A-1D	C102	A-3A	K6	B-1B				
IC12	B-0C	R22	B-1E	R312	B-3C	R712	B-2F	C104	A-3A	K7	B-1B				
IC13	B-1E	R23	B-0C	R313	B-3C	R729	A-2F	C105	B-2A	K8	B-1B				
IC14	A-1D	R24	B-1D	R314	B-3B	R730	A-2F	C106	B-3A	K9	B-1A				
IC15	A-3D	R25	B-1D	R315	B-3C	R731	B-1C	C109	B-2A	K10	B-0B				
IC50	A-3D	R26	B-1F	R316	B-3C	R732	B-1C	C110	A-3A	K115	B-3A				
IC52	B-2C	R27	B-1F	R317	B-2D	R733	B-1C	C111	B-3A	K116	B-3A				
IC71	B-1B	R28	B-2E	R319	B-3C	R803	A-3E	C113	A-2B	K215	B-3B				
IC72	B-1B	R29	B-1F	R320	B-3C	R804	A-3F	C114	A-3B	K216	B-3B				
IC73	A-1B	R30	B-1F	R324	A-3C	R805	A-3E	C120	B-2A	K315	B-3B				
IC74	B-1D	R31	B-1E	R325	A-3C	R808	A-1D	C121	B-2A	K316	B-3B				
IC75	A-1C	R32	B-1E	R326	B-3C	R812	B-2A	C122	B-3A	K701	A-2F				
IC77	A-1C	R33	B-1E	R327	B-3C	R829	B-2A	C123	B-3A	K702	A-2F				
IC103	A-3A	R34	B-1F	R402	A-2B	R830	B-2A	C201	B-2B	K703	A-2F				
IC104	B-2B	R35	B-1F	R403	A-2B	R831	B-1C	C202	A-2B	K704	A-2F				
IC203	A-3B	R36	B-2A	R404	B-2C	R832	B-1C	C204	A-3B	K705	A-2F				
IC303	A-3C	R37	B-2F	R405	A-2C	R833	B-1C	C205	B-3B	K706	A-2F				
IC304	A-2C	R53	A-3D	R406	A-2B	R903	A-2E	C206	B-3B	K801	B-2A				
IC401	B-2C	R54	A-3D	R407	A-2C	R904	A-2E	C209	B-3B	K802	A-1A				
IC402	B-2D	R55	A-3D	R408	A-2B	R905	A-2E	C210	A-3B	K803	B-2A				
IC403	B-2D	R56	B-2A	R412	A-2D	R908	A-1D	C211	A-3B	K804	B-2A				
IC503	B-2D	R57	B-3D	R413	A-2D	R912	B-2B	C220	A-3B	K805	B-2A				
IC601	B-1C	R58	A-2C	R414	A-2D	R929	A-2B	C221	B-2B	K806	B-2A				
IC602	B-2C	R59	A-3D	R415	A-2D	R930	A-2B	C222	B-3B	K901	B-2A				
IC603	B-2C	R71	A-2E	R416	A-2D	R931	B-1C	C223	B-3B	K902	B-2B				
IC604	B-1B	R72	A-2E	R417	A-2D	R932	B-1C	C301	B-3D	K903	A-2B				
IC701	B-3E	R73	B-1B	R418	A-2D	R933	B-1C	C302	A-3C	K904	A-2B				
IC703	B-3D	R74	B-1B	R419	A-2D			C304	B-3C	K905	A-2B				
IC803	B-2D	R75	B-1C	R420	A-2D	C1	B-0@	C305	B-3B	K906	A-2B				
IC901	B-2E	R76	B-1C	R421	A-2D	C2	A-1A	C306	A-3C						
IC903	B-2D	R77	B-1C	R422	A-2D	C3	B-1B	C309	B-3C	TB1	A-3A				
		R78	B-2A	R423	A-2D	C4	A-1B	C310	A-3D	TB2	A-1A				
Q1	B-1C	R79	B-2B	R424	A-2D	C5	B-1B	C311	B-3C	TB3	A-3F				
Q2	B-1E	R80	B-2B	R425	A-2D	C6	B-0A	C313	B-3C	TB4	A-1F				
Q3	B-1E	R81	B-2B	R426	A-2D	C7	B-1B	C314	B-3C						
Q51	B-3D	R82	B-1B	R427	A-2D	C8	A-1A	C320	B-3C	FL101	A-3A				
Q71	B-1C	R83	B-1B	R503	A-2B	C9	B-1C	C321	B-3D	FL201	A-3B				
Q101	B-2A	R101	B-2A	R504	B-2B	C10	B-1D	C322	B-3C	FL301	A-3C				
Q102	B-2A	R102	B-3A	R505	A-2B	C11	B-1D	C323	B-3C						
Q103	B-3A	R103	B-2A	R506	A-2B	C12	B-1D	C401	A-2B	LC1	A-1D				
Q104	A-3A	R104	B-2A	R507	A-2B	C13	B-1D	C403	A-2D	LC2	A-2C				
Q106	B-3A	R105	A-3A	R508	A-1B	C14	B-1C	C404	A-2C	LC4	A-1E				
Q107	B-3A	R106	B-2A	R512	A-2D	C15	B-1D	C501	A-1B	LC73	A-1F				
Q108	B-2A	R107	B-3A	R513	A-2D	C16	B-1D	C503	A-2D	LC701	A-3D				
Q109	B-3A	R108	B-2A	R514	A-2D	C17	B-1C	C504	B-1C	LC702	A-2F				
Q201	B-3C	R109	B-3A	R515	A-2D	C18	A-1E	C601	A-1C	LC801	A-2D				
Q202	A-2C	R110	B-3A	R516	A-2D	C19	A-1E	C603	A-2C	LC802	B-2A				
Q203	B-3B	R111	B-3A	R517	A-2D	C20	B-1E	C604	B-1C	LC901	A-2D				
Q204	A-3B	R112	B-3A	R518	A-2D	C21	B-1E	C605	B-1B	LC902	B-2B				
Q206	B-2C	R113	B-3A	R519	A-2D	C22	A-1E	C606	B-1A						
Q207	A-2B	R114	B-3A	R520	A-2D	C23	A-1D	C607	B-1B	CN1	A-3B				
Q208	B-3C	R115	B-3A	R521	A-2D	C24	B-2E	C608	B-1B	CN2	A-1B				
Q209	B-3B	R116	B-3A	R522	A-2D	C25	B-2E	C704	B-2F	CN3	A-2F				
Q301	B-3D	R117	B-2A	R524	A-2D	C26	A-0D	C705	B-2F	CN4	A-2A				
Q302	B-2D	R119	B-2A	R525	A-2D	C27	A-1E	C706	A-3E	CN5	A-2B				
Q303	B-3C	R120	B-2A	R526	A-2D	C28	B-1D	C707	B-3D	CN6	A-1D				
Q304	A-3C	R124	A-3A	R527	A-2D	C29	A-1E	C710	B-3D						
Q306	B-3C	R125	A-3A	R602	A-2C	C30	B-1A	C711	A-3E						
Q307	A-3C	R126	B-3B	R603	A-2C	C31	A-2E	C712	B-3D						
Q308	B-3D	R127	B-3A	R604	B-2C	C32	B-1E	C713	A-3E						
		R202	B-2B	R606	A-1C	C33	A-2E	C714	B-3F						
D1	B-1D	R203	A-2C	R607	A-2C	C34	B-2E	C715	B-3F						
D403	B-2D	R204	A-2B	R608	A-1C	C35	A-1E	C716	B-1C						
D503	B-2D	R205	B-3B	R612	A-2C	C36	B-1E	C804	B-2A						
D603	B-2C	R206	B-2B	R613	A-2C	C37	B-1E	C805	B-2A						
D702	A-3E	R207	B-2C	R614	A-2C	C38	B-1E	C806	A-2E						
D706	B-2F	R208	A-2C	R615	A-2C	C39	A-1E	C807	B-3D						
D802	A-3E	R209	B-2B	R616	A-2C	C40	B-1E	C810	B-2D						
D806	B-2A	R210	B-3B	R617	A-2C	C41	A-2D	C811	A-2E						
D902	A-2E	R211	B-3B	R618	A-2C	C42	A-3D	C812	B-2D						
D906	B-2B	R212	B-3B	R619	A-2C	C43	B-3D	C814	B-2F						
		R213	B-3B	R620	A-2C	C44	B-1D	C816	B-1C						
R1	B-0C	R214	B-3B	R621	A-2C	C52	B-3D	C904	B-2B						
R2	B-1C	R215	B-3B	R622	A-2C	C53	A-2D	C905	B-2B						
R3	B-1C	R216	B-3B	R623	A-2C	C54	A-3D	C906	A-2E						
R4	B-1C	R217	A-2C	R624	A-2C	C55	B-3D	C907	B-2D						
R5	B-1C	R219	B-3B	R625	A-2C	C56	B-2D	C910	B-2D						
R6	B-1D	R220	A-2B	R626	A-2C	C58	A-3D	C911	B-2E						
R7	B-1D	R224	A-2B	R627	A-2C	C59	A-3D	C912	B-2D						
R8	B-1D	R225	A-2B	R630	B-1B	C60	A-3D	C914	B-2F						
R9	B-1D	R226	B-3B	R631	B-1B	C71	B-2E	C916	B-1C						
R10	B-1D	R227	B-3B	R632	B-1B	C72	A-2E								
						C73	B-2F	TP102	A-3C						

4-5

4.13 ISB/ISG/ISR SCHEMATIC DIAGRAM

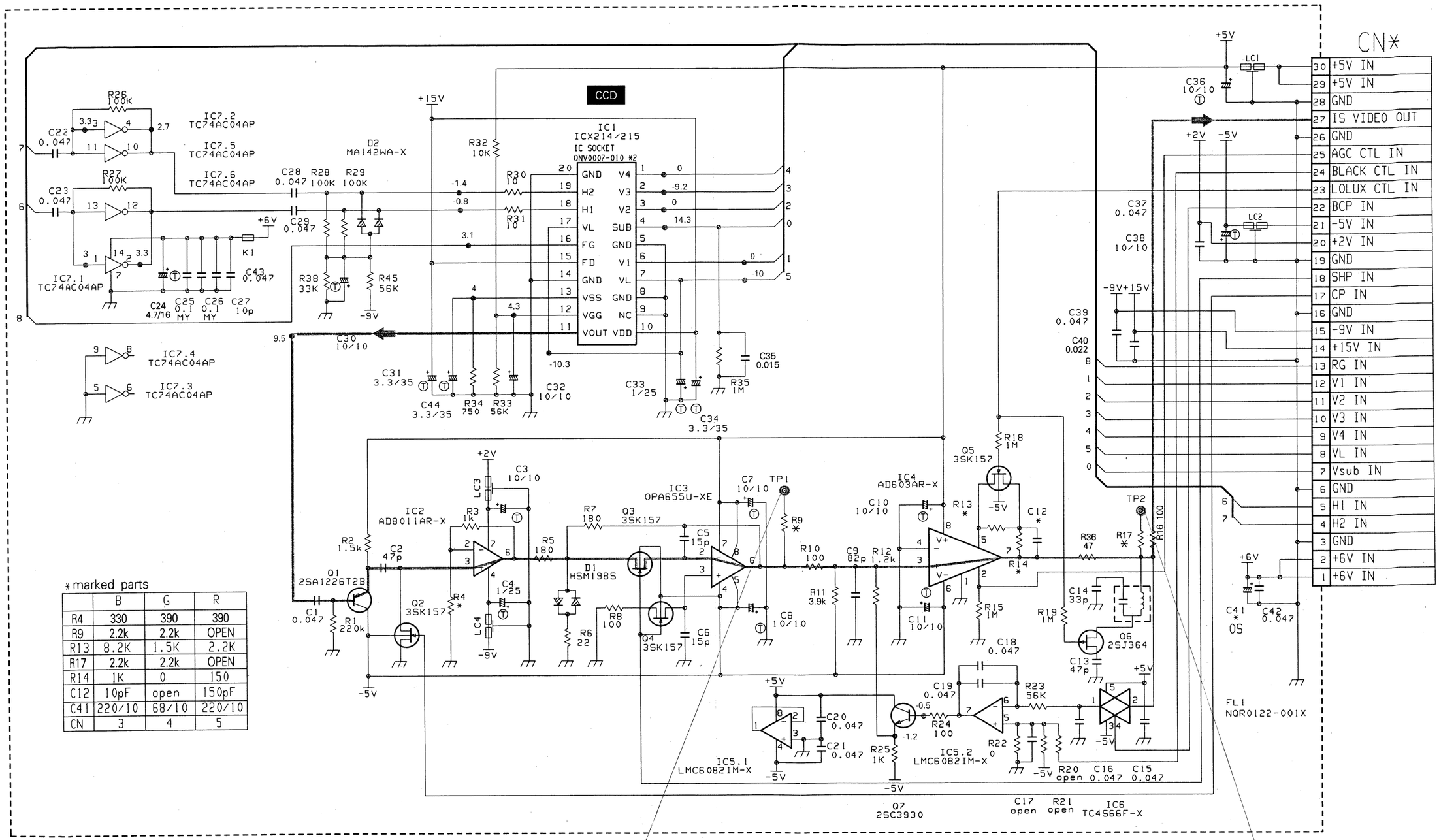

* marked parts

	B	G	R
R4	330	390	390
R9	2.2k	2.2k	OPEN
R13	8.2K	1.5K	2.2K
R17	2.2k	2.2k	OPEN
R14	1K	0	150
C12	10pF	open	150pF
C41	220/10	68/10	220/10
CN	3	4	5

4-6

4.14 ISB/ISG/ISR CIRCUIT BOARD

4.14.1 ISB board

– SIDE A –

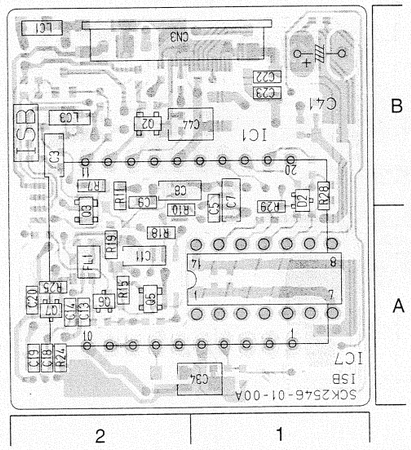

– SIDE B –

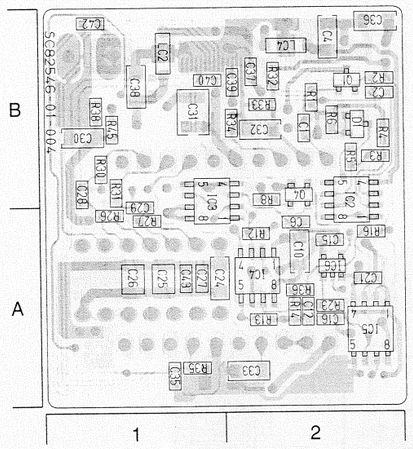

● **ADDRESS TABLE OF BOARD PARTS**

Each address may have an address error by one interval.

Side A-1C (Y axis / X axis)

IC1	A-2A	D2	A-1B	R18	A-2A	R45	B-1B	C16	B-2A	C34	A-1A	LC2	B-1B
IC2	B-2A			R19	A-2A			C18	A-2A	C35	B-1A	LC3	A-2B
IC3	B-1A	R1	B-2B	R23	B-2A	C1	B-2B	C19	A-2A	C36	B-2B	LC4	B-2B
IC4	B-2A	R2	B-2B	R24	A-2A	C2	B-2B	C20	A-2A	C37	B-2B		
IC5	B-2A	R3	B-2B	R25	A-2A	C3	A-2B	C21	B-2A	C38	B-1B		
IC6	B-2A	R4	B-2B	R26	B-1A	C4	B-2B	C22	A-1B	C39	B-2B		
IC7	A-1A	R5	B-2B	R27	B-1A	C5	A-1A	C23	A-1B	C40	B-1B		
		R6	B-2B	R28	A-1B	C6	B-2A	C24	B-1A	C41	A-1B		
Q1	B-2B	R7	A-2B	R29	A-1B	C7	A-1B	C25	B-1A	C42	B-1B		
Q2	A-2B	R8	B-2B	R30	B-1B	C8	A-2B	C26	B-1A	C43	B-1A		
Q3	A-2A	R10	A-2A	R31	B-1B	C9	A-2B	C27	B-1A	C44	A-1B		
Q4	B-2B	R11	A-2B	R32	B-2B	C10	B-2A	C28	B-1B				
Q5	A-2A	R12	B-2A	R33	B-2B	C11	A-2A	C29	B-1B	CN3	A-2B		
Q6	A-2A	R13	B-2A	R34	B-2B	C12	B-2A	C30	B-1B				
Q7	A-2A	R14	B-2A	R35	B-1A	C13	A-2A	C31	B-1B	FL1	A-2A		
		R15	A-2A	R36	B-2A	C14	A-2A	C32	B-2B				
D1	B-2B	R16	B-2A	R38	B-1B	C15	B-2A	C33	B-2A	LC1	A-2B		

4.14.2 ISG board

– SIDE A –

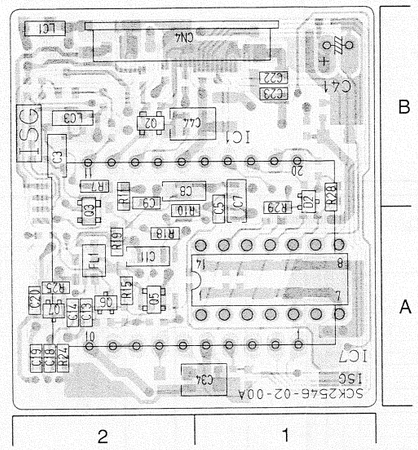

– SIDE B –

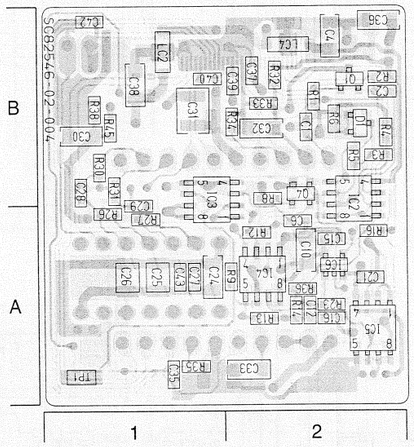

● **ADDRESS TABLE OF BOARD PARTS**

Each address may have an address error by one interval.

Side A-1C (Y axis / X axis)

IC1	A-2A	D2	A-1B	R16	B-2A	R38	B-1B	C15	B-2A	C33	B-2A	CN4	A-2B
IC2	B-2A			R18	A-2A	R45	B-1B	C16	B-2A	C34	A-1A		
IC3	B-1A	R1	B-2B	R19	A-2A			C18	A-2A	C35	B-1A	LC1	A-2B
IC4	B-2A	R2	B-2B	R23	B-2A	C1	B-2B	C19	A-2A	C36	B-2B	LC2	B-1B
IC5	B-2A	R3	B-2B	R24	A-2A	C2	B-2B	C20	A-2A	C37	B-2B	LC3	A-2B
IC6	B-2A	R4	B-2B	R25	A-2A	C3	A-2B	C21	B-2A	C38	B-1B	LC4	B-2B
IC7	A-1A	R5	B-2B	R26	B-1A	C4	B-2B	C22	A-1B	C39	B-2B		
		R6	B-2B	R27	B-1A	C5	A-1A	C23	A-1B	C40	B-1B		
Q1	B-2B	R7	A-2B	R28	A-1B	C6	B-2A	C24	B-1A	C41	A-1B		
Q2	A-2B	R8	B-2B	R29	A-1B	C7	A-1B	C25	B-1A	C42	B-1B		
Q3	A-2A	R9	B-2A	R30	B-1B	C8	A-2B	C26	B-1A	C43	B-1A		
Q4	B-2B	R10	A-2A	R31	B-1B	C9	A-2B	C27	B-1A	C44	A-2B		
Q5	A-2A	R11	A-2B	R32	B-2B	C10	B-2A	C28	B-1B				
Q6	A-2A	R12	B-2A	R33	B-2B	C11	A-2A	C29	B-1B	TP1	B-1A		
Q7	A-2A	R13	B-2A	R34	B-2B	C12	B-2A	C30	B-1B				
		R14	B-2A	R35	B-1A	C13	A-2A	C31	B-1B	FL1	A-2A		
D1	B-2B	R15	A-2A	R36	B-2A	C14	A-2A	C32	B-2B				

4.14.3 ISR board

– SIDE A –

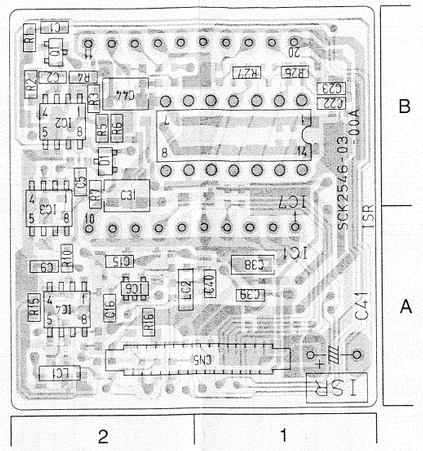

– SIDE B –

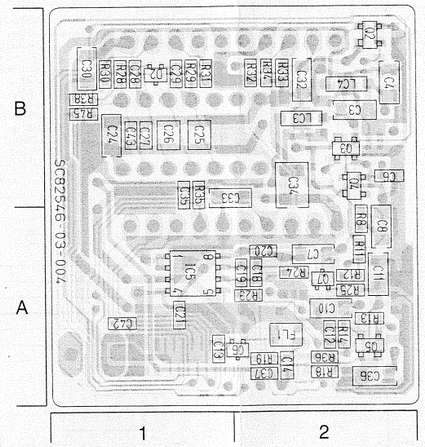

● **ADDRESS TABLE OF BOARD PARTS**

Each address may have an address error by one interval.

Side A-1C (Y axis / X axis)

IC1	A-2B	D2	B-1B	R18	B-2A	R45	B-1B	C16	A-2A	C34	B-2B	LC2	A-2A
IC2	A-2B			R19	B-2A			C18	B-2A	C35	B-1B	LC3	B-2B
IC3	A-2B	R1	A-2B	R23	B-2A	C1	A-2B	C19	B-2A	C36	B-2A	LC4	B-2B
IC4	A-2A	R2	A-2B	R24	B-2A	C2	A-2B	C20	B-2A	C37	B-2A		
IC5	B-1A	R3	A-2B	R25	B-2A	C3	B-2B	C21	B-1A	C38	A-1A		
IC6	A-2A	R4	A-2B	R26	A-1B	C4	B-2B	C22	A-1B	C39	A-1A		
IC7	A-1B	R5	A-2B	R27	A-1B	C5	A-2B	C23	A-1B	C40	A-1A		
		R6	A-2B	R28	B-1B	C6	B-2B	C24	B-1B	C41	A-1A		
Q1	A-2B	R7	A-2B	R29	B-1B	C7	B-2A	C25	B-1B	C42	B-1A		
Q2	B-2B	R8	B-2A	R30	B-1B	C8	B-2A	C26	B-1B	C43	B-1B		
Q3	B-2B	R10	A-2A	R31	B-1B	C9	A-2A	C27	B-1B	C44	A-2B		
Q4	B-2B	R11	B-2A	R32	B-2B	C10	B-2A	C28	B-1B				
Q5	B-2A	R12	B-2A	R33	B-2B	C11	B-2A	C29	B-1B	CN5	A-1A		
Q6	B-2A	R13	B-2A	R34	B-2B	C12	B-2A	C30	B-1B				
Q7	B-2A	R14	B-2A	R35	B-1B	C13	B-1A	C31	A-2B	FL1	B-2A		
		R15	A-2A	R36	B-2A	C14	B-2A	C32	B-2B				
D1	A-2B	R16	A-2A	R38	B-1B	C15	A-2A	C33	B-1B	LC1	A-2A		

4-7

4.15 CP SCHEMATIC DIAGRAM

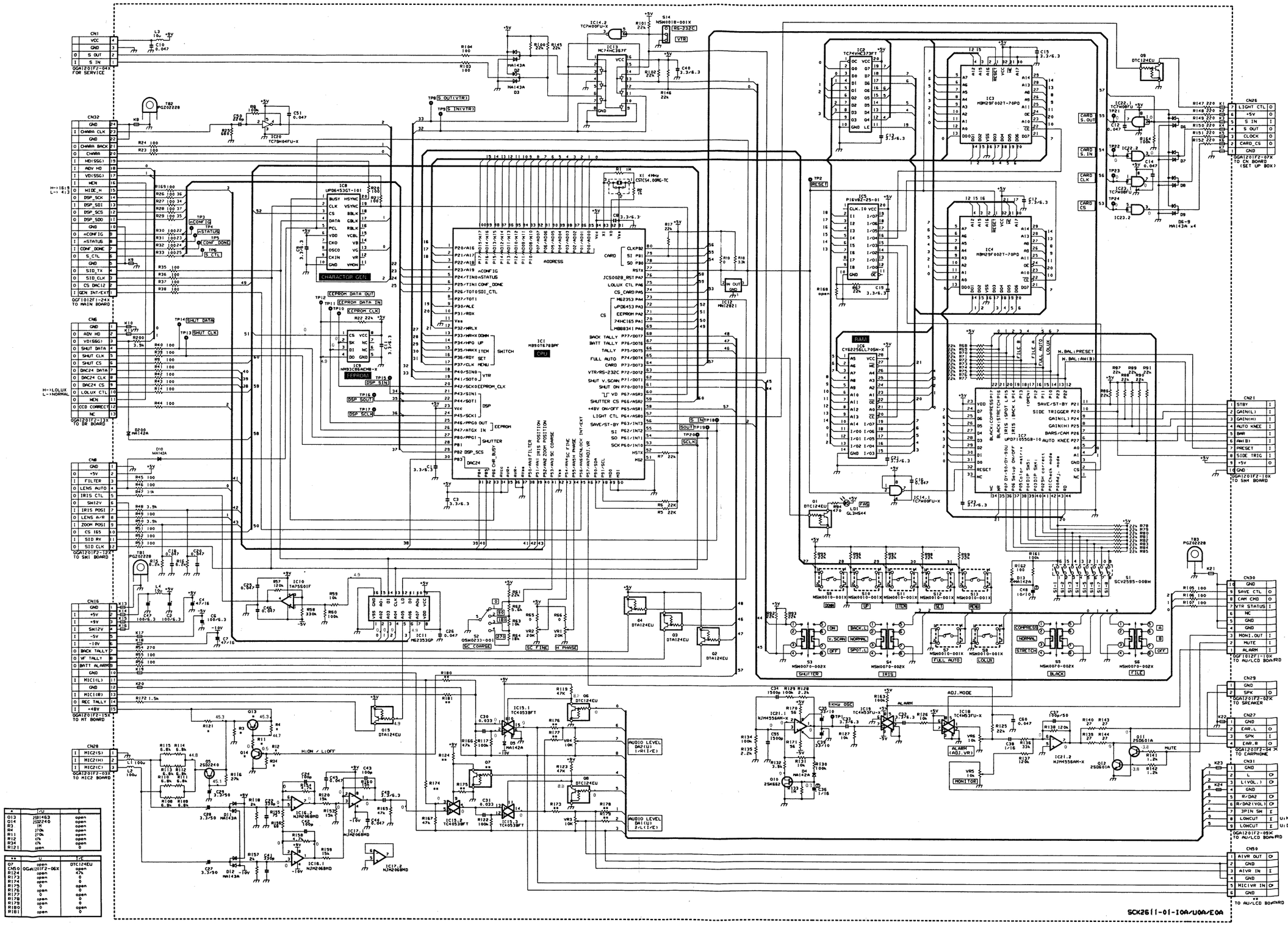

*	U	E
D13	2SB1463	open
D14	2SD2240	open
R3	1M	open
R4	270k	open
R11	270k	open
R12	47k	open
R34	47k	open
R121	open	0

**	U	E
Q7	open	DTC124EU
CN50	OGA1201F2-06X	open
R124	open	47k
R173	open	0
R174	open	0
R175	0	open
R176	open	0
R177	0	open
R178	open	0
R179	open	0
R180	0	open
R181	open	0

4.16 CP CIRCUIT BOARD

– SIDE A –

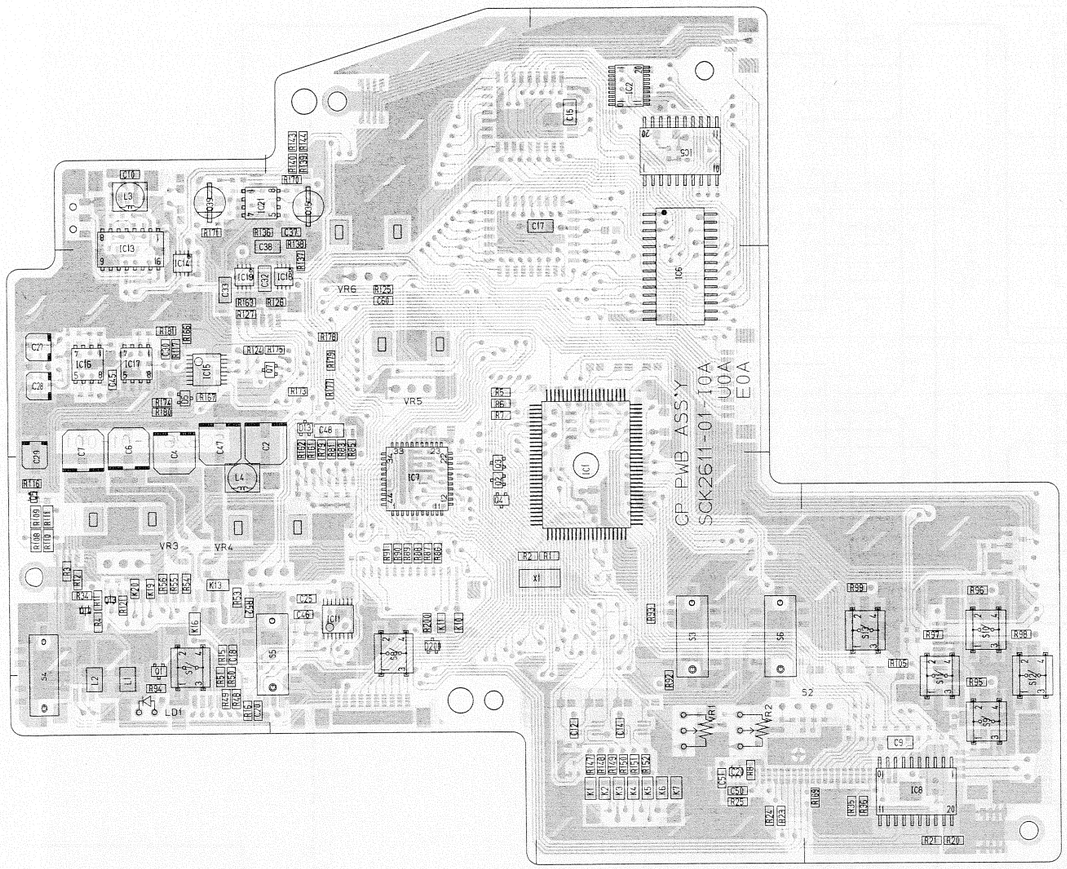

– SIDE B –

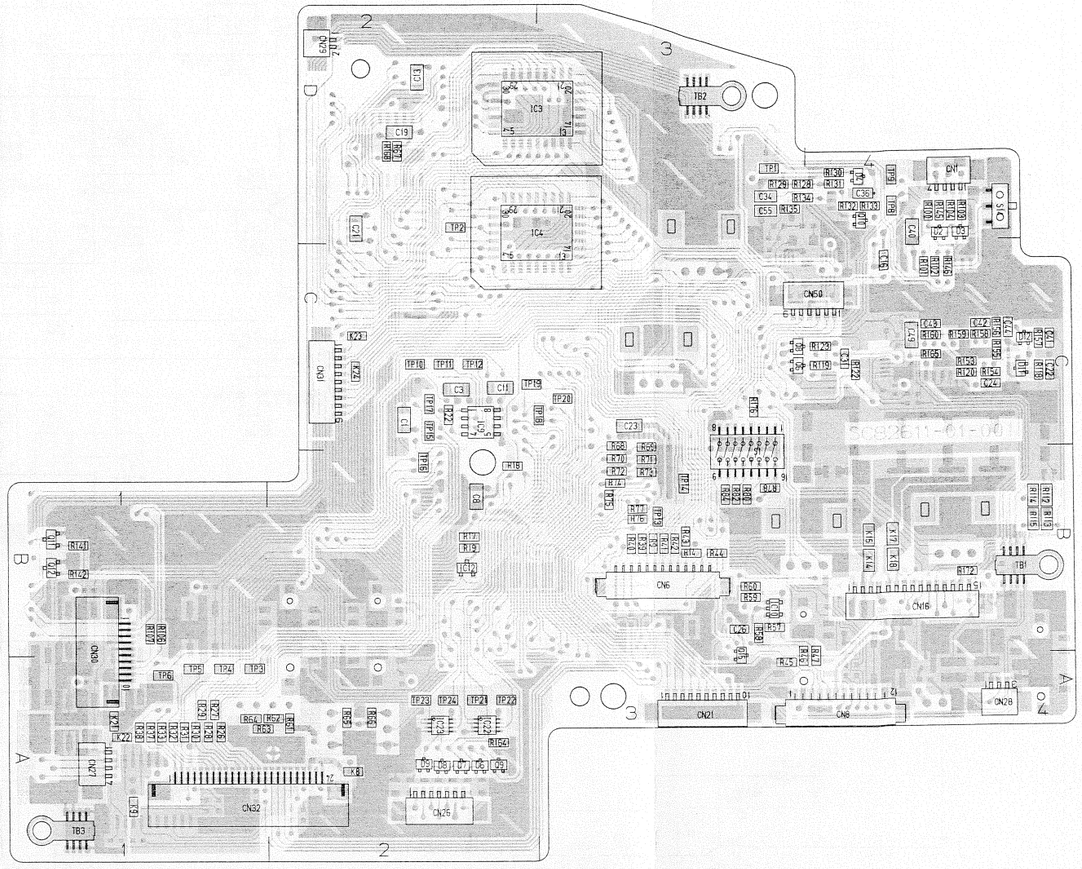

● **ADDRESS TABLE OF BOARD PARTS**

Each address may have an address error by one interval.

Side — A-1C — Y axis / X axis

IC1	A-2B	Q4	A-3B	R2	A-3B	R31	B-1A	R58	B-3B	R85	A-3B	R112	B-4B	R139	A-3D	R166	A-4C	C3	B-2C	C31	B-4C	L4	A-4B	CN6	B-3B	K16	A-4B	S14	B-4D
IC2	A-2D	Q5	A-4B	R3	A-4B	R32	B-1A	R59	B-3B	R86	A-3B	R113	B-4B	R140	A-3D	R167	A-4C	C4	A-4B	C32	A-4C			CN8	B-4A	K17	B-4B		
IC3	B-3D	Q6	B-3C	R4	A-4B	R33	B-1A	R60	B-3B	R87	A-3B	R114	B-4B	R141	B-1B	R168	B-2D	C6	A-4B	C33	A-4C	TP1	B-3D	CN16	B-4B	K18	B-4B	X1	A-2B
IC4	B-2C	Q7	A-3C	R5	A-3C	R34	A-4B	R61	B-2A	R88	A-3B	R115	B-4B	R142	B-1B	R169	A-1A	C7	A-4B	C34	B-3D	TP2	B-2C	CN21	B-3A	K19	A-4B		
IC5	A-2D	Q8	B-3C	R6	A-3C	R35	A-1A	R62	B-2A	R89	A-3B	R116	A-4B	R143	A-3D	R170	A-3D	C8	B-2B	C35	A-3D	TP3	B-1A	CN26	B-2A	K20	A-4B	LD1	A-4A
IC6	A-2C	Q9	B-2A	R7	A-3C	R36	A-1A	R63	B-1A	R90	A-3B	R117	A-4C	R144	A-3D	R171	A-4C	C9	A-1A	C36	B-4D	TP4	B-1A	CN27	B-1A	K21	B-1A		
IC7	A-3B	Q10	B-4C	R8	A-2A	R37	B-1A	R64	B-1A	R91	A-3B	R118	B-4C	R145	B-4D	R172	B-4B	C10	A-4D	C37	A-3C	TP5	B-1A	CN28	B-4A	K22	B-1A		
IC8	A-1A	Q11	B-1B	R9	B-3B	R38	B-1A	R65	B-2A	R92	A-2A	R119	B-4C	R146	B-4C	R173	A-3C	C11	B-2C	C38	A-4C	TP6	B-1A	CN29	B-2D	K23	B-2C		
IC9	B-2C	Q12	B-1B	R11	A-4B	R39	B-3B	R66	B-2A	R93	A-2B	R120	B-4C	R147	A-2A	R174	A-4C	C12	A-2A	C39	A-4D	TP8	B-4D	CN30	B-1A	K24	B-2C		
IC10	B-3B	Q13	A-4B	R12	A-4B	R40	B-3B	R67	B-2D	R94	A-4A	R121	A-4B	R148	A-2A	R175	A-3C	C13	B-2D	C40	B-4C	TP9	B-4D	CN31	B-2C				
IC11	A-3B	Q14	A-4B	R14	B-3B	R41	B-3B	R68	B-3B	R95	A-1A	R122	B-4C	R149	A-2A	R176	B-3C	C14	A-2A	C41	B-4C	TP10	B-2C	CN32	B-1A	TB1	B-4B		
IC12	B-2B	Q15	B-3A	R15	A-4A	R42	B-3B	R69	B-3B	R96	A-1B	R123	B-4C	R150	A-2A	R177	A-3C	C15	A-2D	C42	B-4C	TP11	B-2C	CN50	B-4C	TB2	B-3D		
IC13	A-4C			R16	A-4A	R43	B-3B	R70	B-3B	R97	A-1B	R124	A-4C	R151	A-2A	R178	A-3C	C16	B-4C	C43	B-4C	TP12	B-2C			TB3	B-1A		
IC14	A-4C	D2	B-4C	R17	B-2B	R44	B-3B	R71	B-3B	R98	A-1B	R125	A-3C	R152	A-2A	R179	A-3C	C17	A-2C	C44	B-4C	TP13	B-3B	K1	A-2A				
IC15	A-4C	D3	B-4C	R18	B-2B	R45	B-3A	R72	B-3B	R99	A-1B	R126	A-3C	R153	B-4C	R180	A-4C	C18	A-4A	C45	A-4C	TP14	B-3B	K2	A-2A	S1	B-3B		
IC16	A-4C	D4	B-4D	R19	B-2B	R46	B-3A	R73	B-3B	R100	B-4D	R127	A-4C	R154	B-4C	R181	A-4C	C19	B-2D	C46	A-3B	TP15	B-2C	K3	A-2A	S2	A-2A		
IC17	A-4C	D5	A-4C	R20	A-1A	R47	B-4A	R74	B-3B	R101	B-4C	R128	B-4D	R155	B-4C	R200	A-3B	C20	A-4A	C47	A-4B	TP16	B-2B	K4	A-2A	S3	A-2B		
IC18	A-3C	D6	B-2A	R21	A-1A	R48	A-4A	R75	B-3B	R102	B-4C	R129	B-3D	R156	B-4C			C21	B-2C	C48	A-3C	TP17	B-2C	K5	A-2A	S4	A-4A		
IC19	A-4C	D7	B-2A	R22	B-2C	R49	A-4A	R76	B-3B	R103	B-4D	R130	B-4D	R157	B-4C	VR1	A-2A	C22	B-4C	C49	B-4C	TP18	B-3C	K6	A-2A	S5	A-3A		
IC20	A-2A	D8	B-2A	R23	A-2A	R50	A-4A	R77	B-3B	R104	B-4D	R131	B-4D	R158	B-4C	VR2	A-2A	C23	B-3C	C50	A-2A	TP19	B-2C	K7	A-2A	S6	A-2B		
IC21	A-4D	D9	B-2A	R24	A-2A	R51	A-4A	R78	B-3B	R105	A-1A	R132	B-4D	R159	B-4C	VR3	A-4B	C24	B-4C	C51	A-2A	TP20	B-3C	K8	B-2A	S7	A-4A		
IC22	B-2A	D11	B-4C	R25	A-2A	R52	A-4B	R79	A-3B	R106	B-1B	R133	B-4D	R160	B-4C	VR4	A-4B	C25	A-3B	C55	B-3D	TP21	B-2A	K9	B-1A	S8	A-3A		
IC23	B-2A	D12	B-4C	R26	B-1A	R53	A-4B	R80	B-3B	R107	B-1B	R134	B-4D	R161	A-3B	VR5	A-3C	C26	B-3B	C60	A-3C	TP22	B-2A	K10	A-3B	S9	A-1A		
		D13	A-3C	R27	B-1A	R54	A-4B	R81	A-3B	R108	A-4B	R135	B-3D	R162	A-3B	VR6	A-3C	C27	A-4C			TP23	B-2A	K11	A-3B	S10	A-1B		
Q1	A-4A	D200	A-3B	R28	B-1A	R55	A-4B	R82	B-3B	R109	A-4B	R136	A-4C	R163	A-4C			C28	A-4C	L1	A-4A	TP24	B-2A	K13	A-4B	S11	A-1A		
Q2	A-3B			R29	B-1A	R56	A-4B	R83	A-3B	R110	A-4B	R137	A-3C	R164	B-2A	C1	B-2C	C29	A-4B	L2	A-4A			K14	B-4B	S12	A-1A		
Q3	A-3B	R1	A-2B	R30	B-1A	R57	B-3B	R84	B-3B	R111	A-4B	R138	A-3C	R165	B-4C	C2	A-4B	C30	A-4C	L3	A-4D	CN1	B-4D	K15	B-4B	S13	A-1B		

4-9

4.17 MAIN SCHEMATIC DIAGRAM

– MAIN BOARD SCHEMATIC DIAGRAM 1/11 –

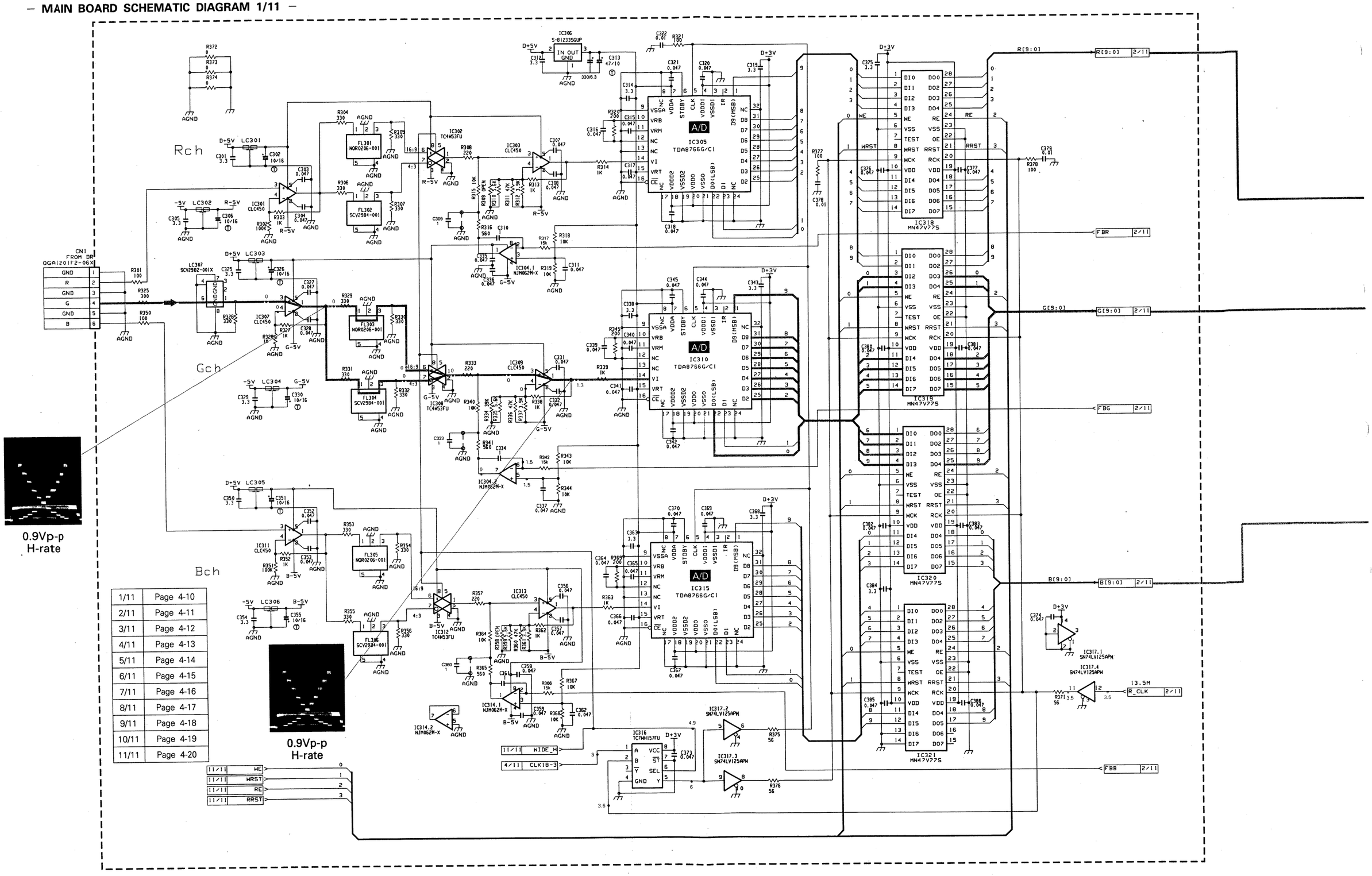

1/11	Page 4-10
2/11	Page 4-11
3/11	Page 4-12
4/11	Page 4-13
5/11	Page 4-14
6/11	Page 4-15
7/11	Page 4-16
8/11	Page 4-17
9/11	Page 4-18
10/11	Page 4-19
11/11	Page 4-20

– MAIN BOARD SCHEMATIC DIAGRAM 2/11 –

1/11	Page 4-10
2/11	Page 4-11
3/11	Page 4-12
4/11	Page 4-13
5/11	Page 4-14
6/11	Page 4-15
7/11	Page 4-16
8/11	Page 4-17
9/11	Page 4-18
10/11	Page 4-19
11/11	Page 4-20

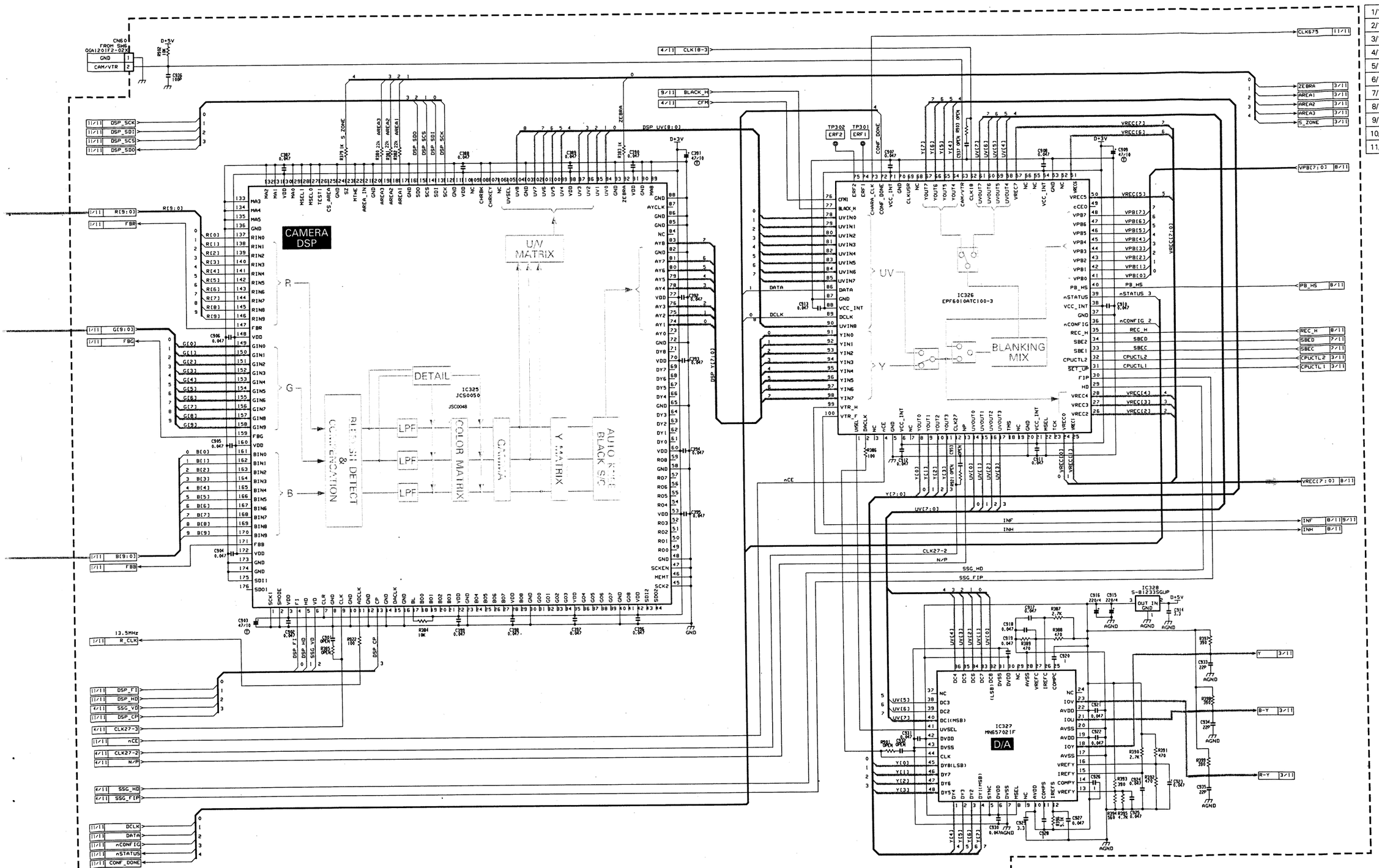

– MAIN BOARD SCHEMATIC DIAGRAM 3/11 –

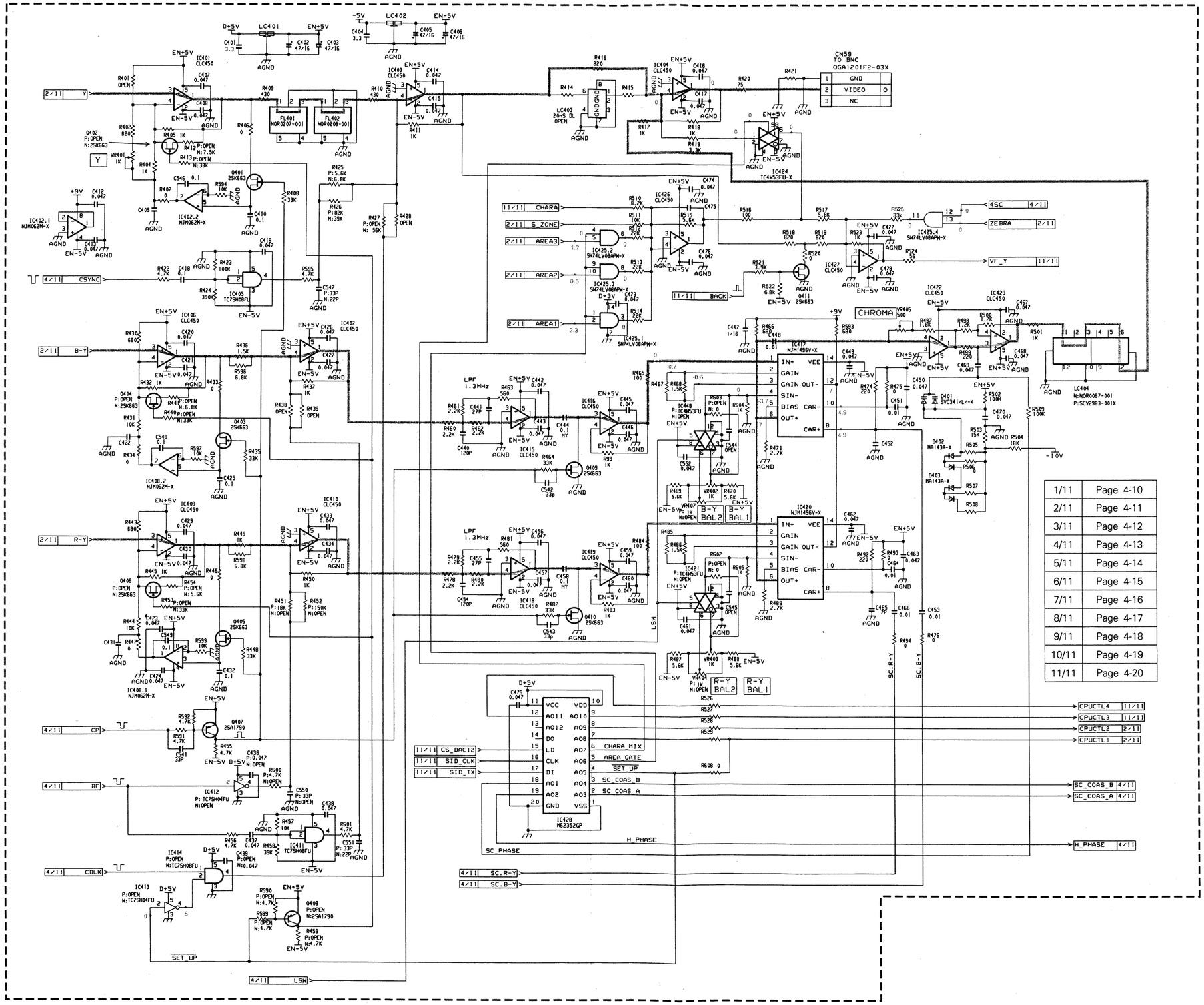

1/11	Page 4-10
2/11	Page 4-11
3/11	Page 4-12
4/11	Page 4-13
5/11	Page 4-14
6/11	Page 4-15
7/11	Page 4-16
8/11	Page 4-17
9/11	Page 4-18
10/11	Page 4-19
11/11	Page 4-20

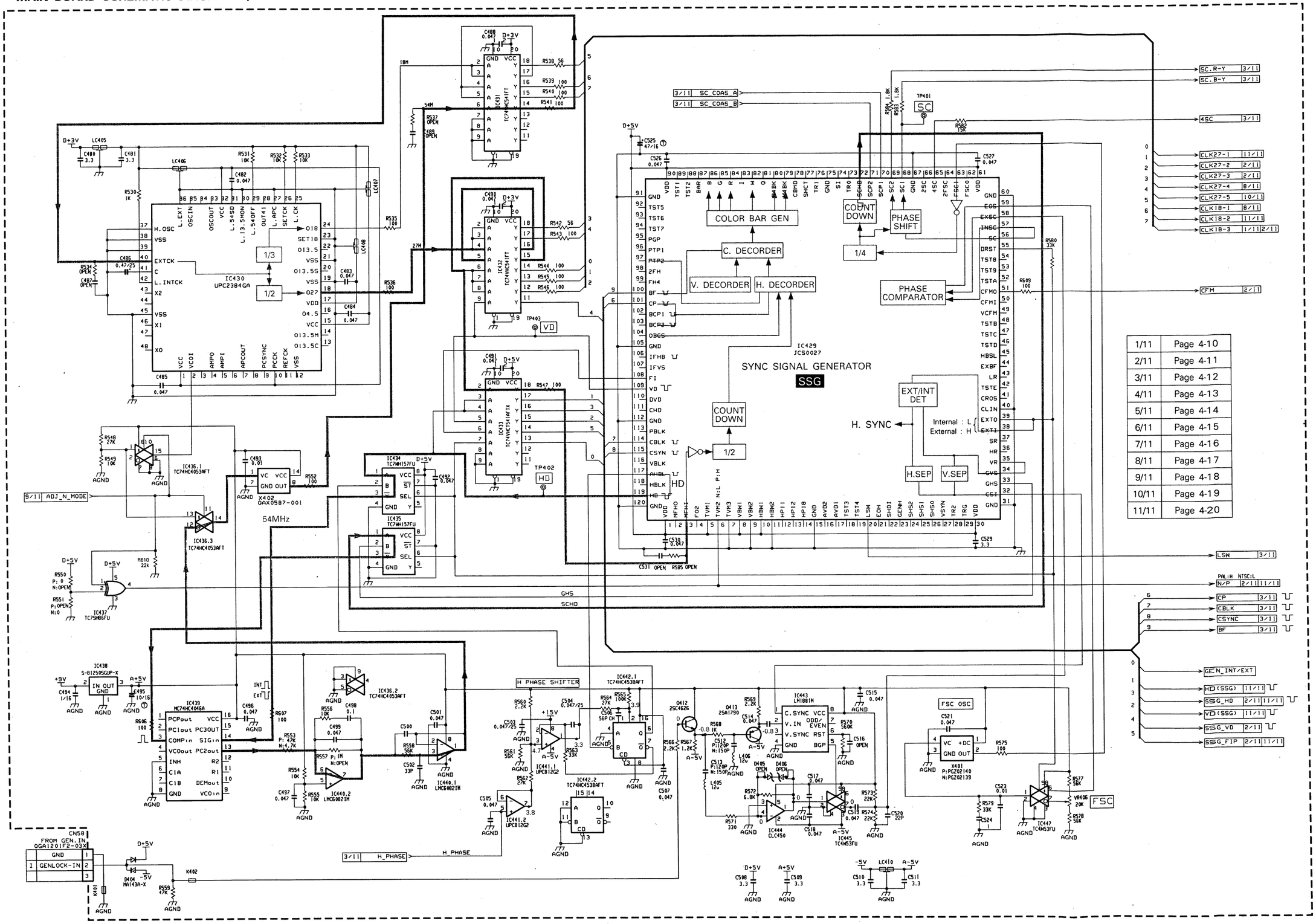

1/11	Page 4-10
2/11	Page 4-11
3/11	Page 4-12
4/11	Page 4-13
5/11	Page 4-14
6/11	Page 4-15
7/11	Page 4-16
8/11	Page 4-17
9/11	Page 4-18
10/11	Page 4-19
11/11	Page 4-20

1/11	Page 4-10
2/11	Page 4-11
3/11	Page 4-12
4/11	Page 4-13
5/11	Page 4-14
6/11	Page 4-15
7/11	Page 4-16
8/11	Page 4-17
9/11	Page 4-18
10/11	Page 4-19
11/11	Page 4-20

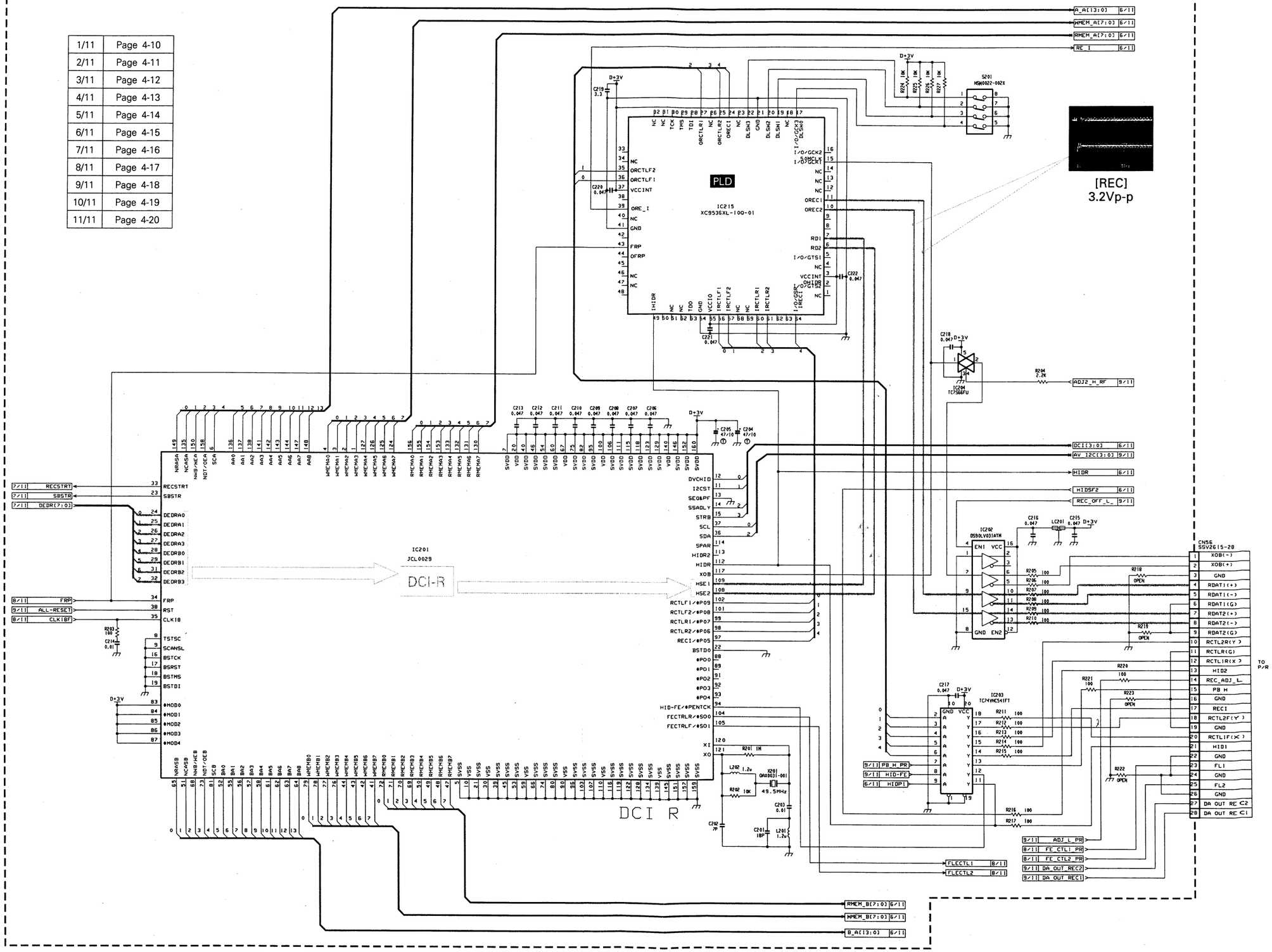

– MAIN BOARD SCHEMATIC DIAGRAM 6/11 –

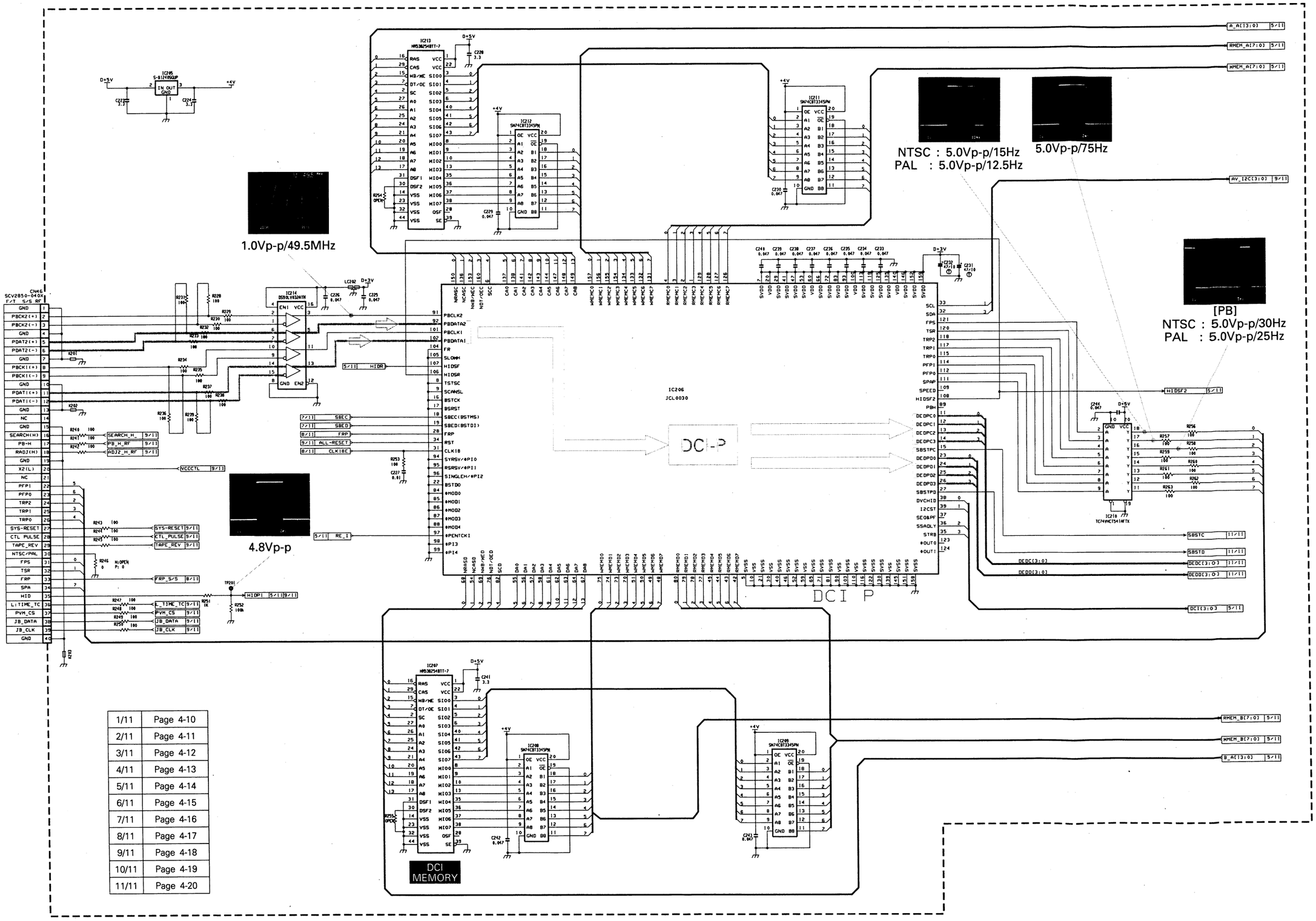

1/11	Page 4-10
2/11	Page 4-11
3/11	Page 4-12
4/11	Page 4-13
5/11	Page 4-14
6/11	Page 4-15
7/11	Page 4-16
8/11	Page 4-17
9/11	Page 4-18
10/11	Page 4-19
11/11	Page 4-20

1/11	Page 4-10
2/11	Page 4-11
3/11	Page 4-12
4/11	Page 4-13
5/11	Page 4-14
6/11	Page 4-15
7/11	Page 4-16
8/11	Page 4-17
9/11	Page 4-18
10/11	Page 4-19
11/11	Page 4-20

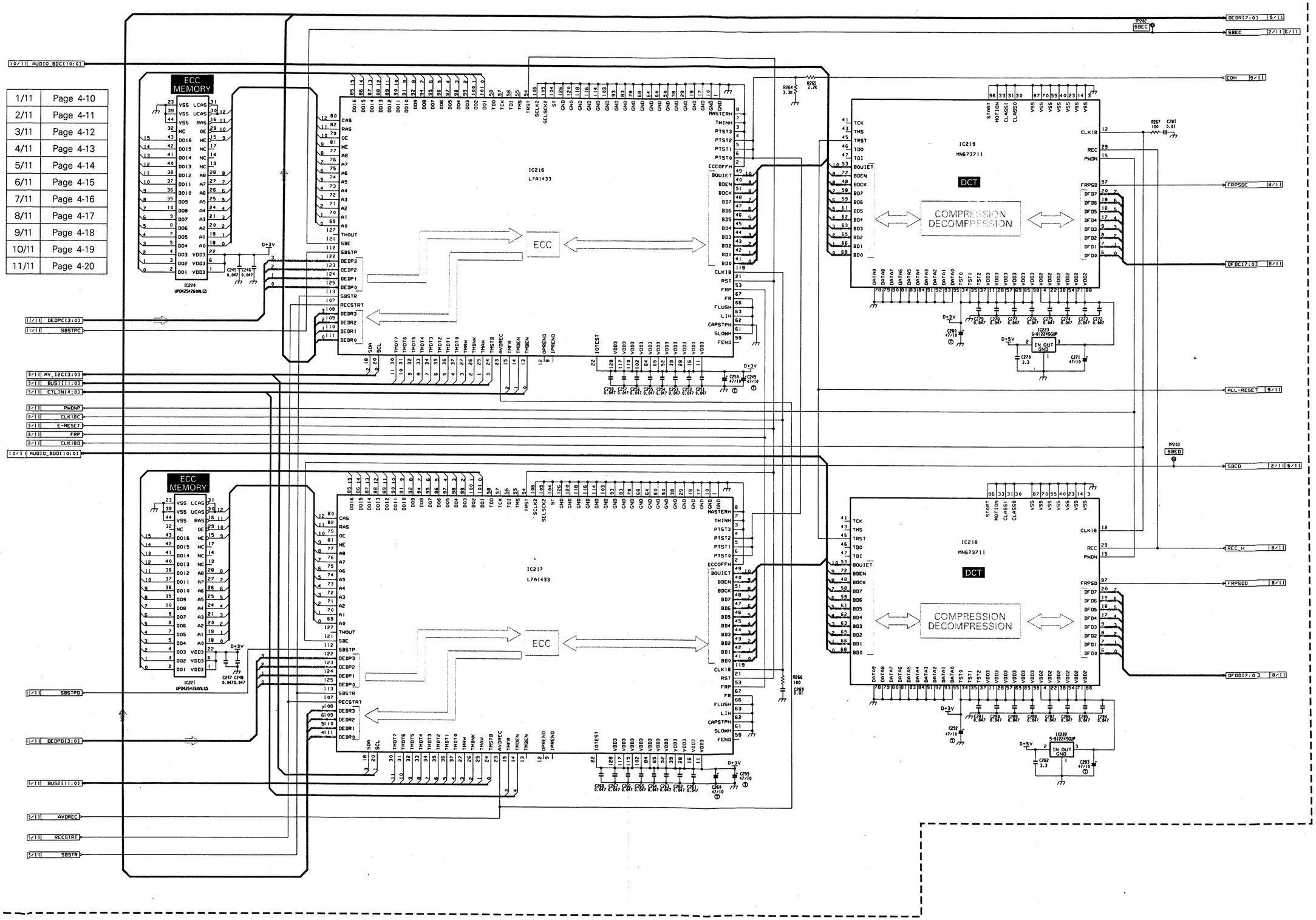

– MAIN BOARD SCHEMATIC DIAGRAM 8/11 –

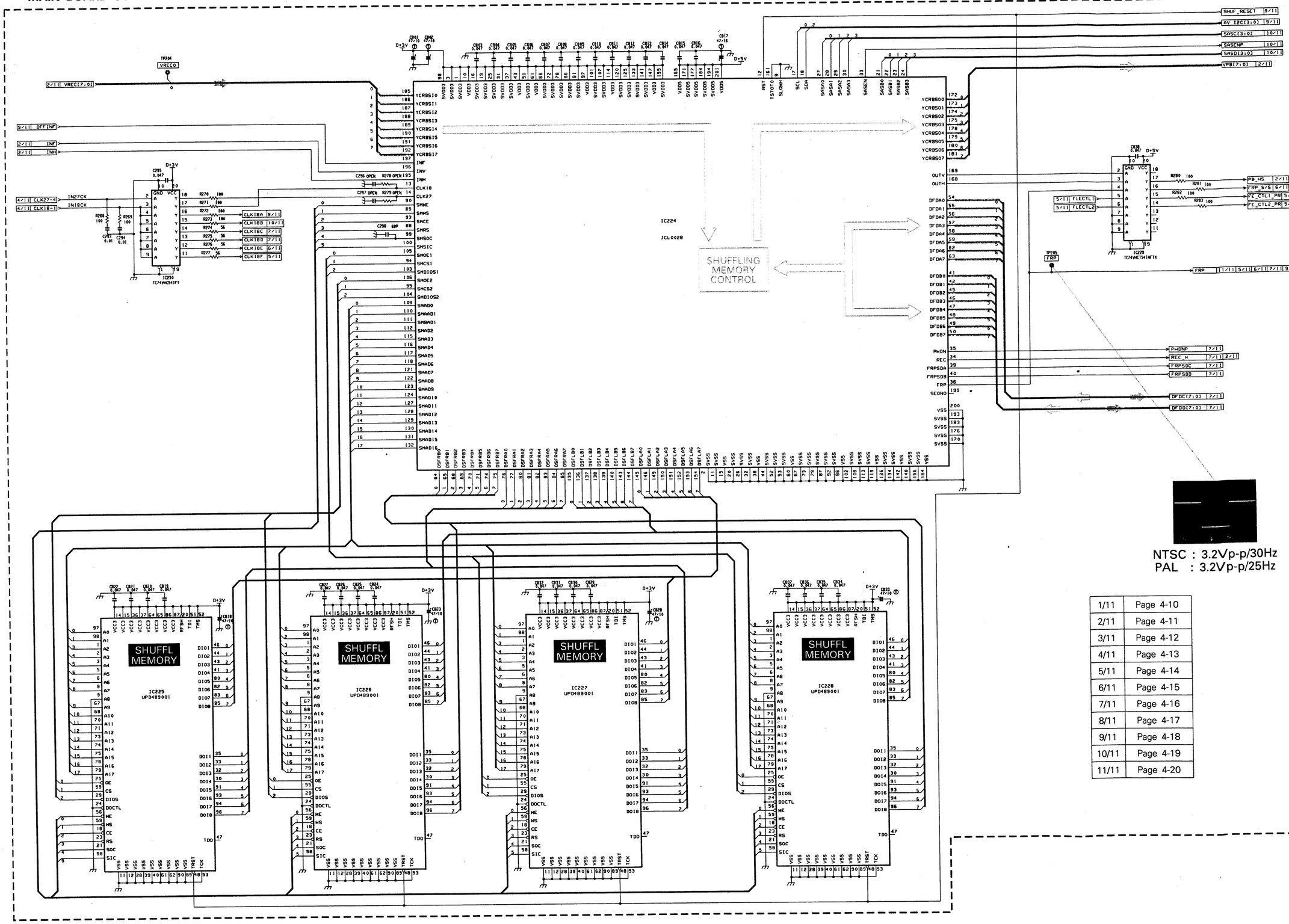

NTSC : 3.2Vp-p/30Hz
PAL : 3.2Vp-p/25Hz

1/11	Page 4-10
2/11	Page 4-11
3/11	Page 4-12
4/11	Page 4-13
5/11	Page 4-14
6/11	Page 4-15
7/11	Page 4-16
8/11	Page 4-17
9/11	Page 4-18
10/11	Page 4-19
11/11	Page 4-20

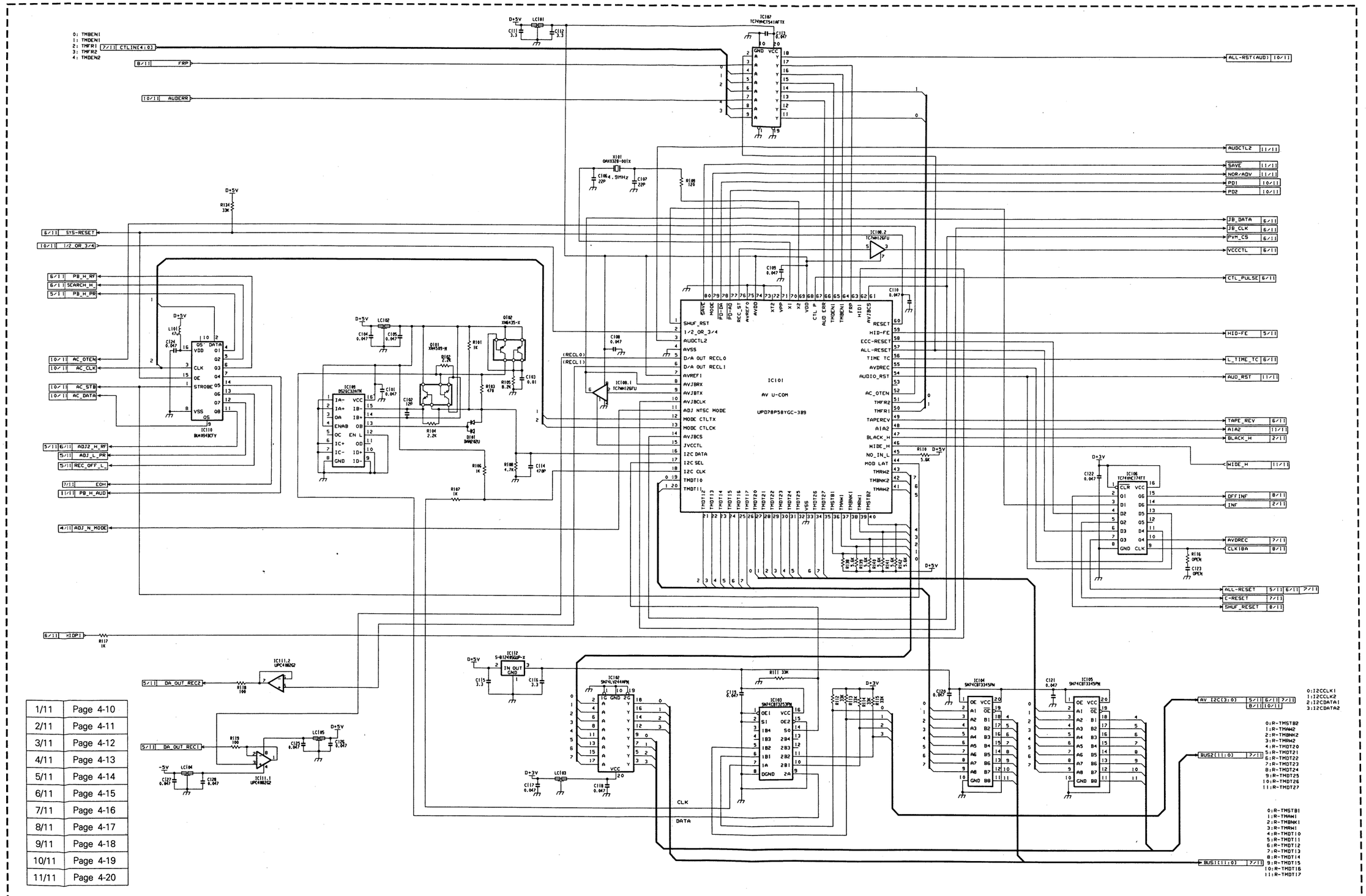

1/11	Page 4-10
2/11	Page 4-11
3/11	Page 4-12
4/11	Page 4-13
5/11	Page 4-14
6/11	Page 4-15
7/11	Page 4-16
8/11	Page 4-17
9/11	Page 4-18
10/11	Page 4-19
11/11	Page 4-20

– MAIN BOARD SCHEMATIC DIAGRAM 10/11 –

1/11	Page 4-10
2/11	Page 4-11
3/11	Page 4-12
4/11	Page 4-13
5/11	Page 4-14
6/11	Page 4-15
7/11	Page 4-16
8/11	Page 4-17
9/11	Page 4-18
10/11	Page 4-19
11/11	Page 4-20

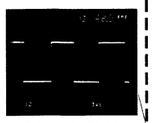

4Vp-p/48kHz

4Vp-p/3MHz

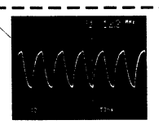

3.5Vp-p/12.2MHz

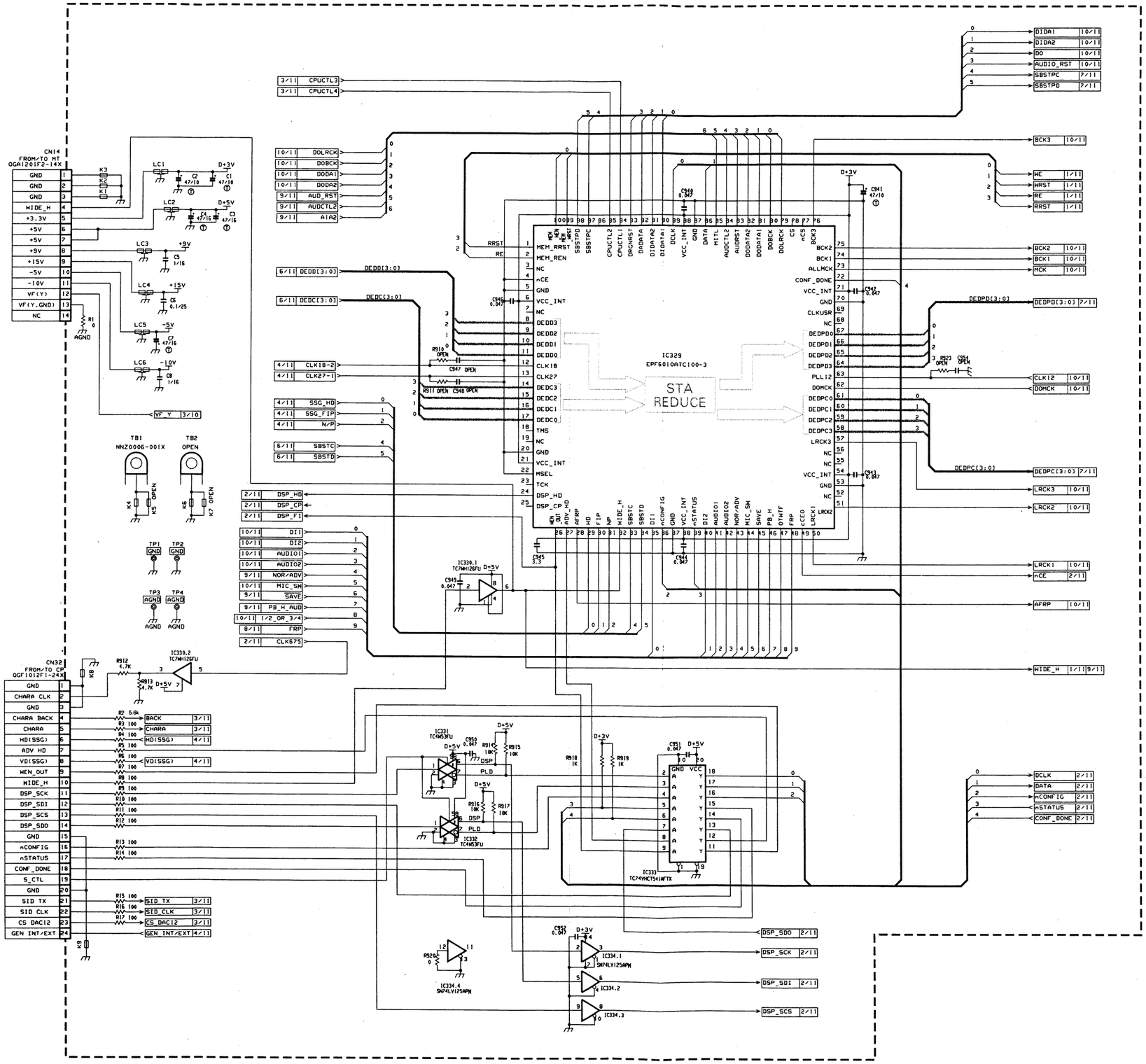

1/11	Page 4-10
2/11	Page 4-11
3/11	Page 4-12
4/11	Page 4-13
5/11	Page 4-14
6/11	Page 4-15
7/11	Page 4-16
8/11	Page 4-17
9/11	Page 4-18
10/11	Page 4-19
11/11	Page 4-20

– INNER PATTERN (SIDE B) –

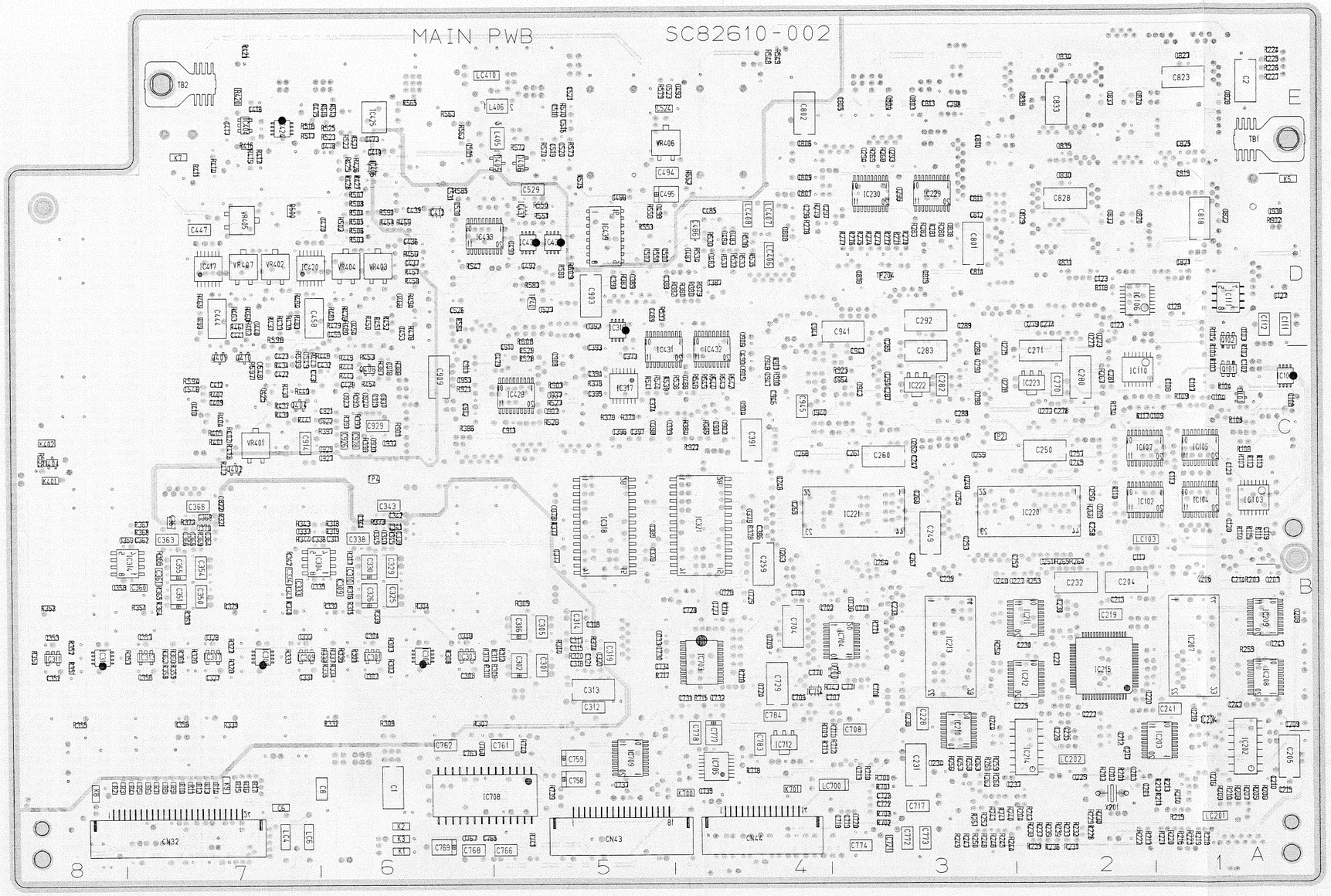

— SIDE A —

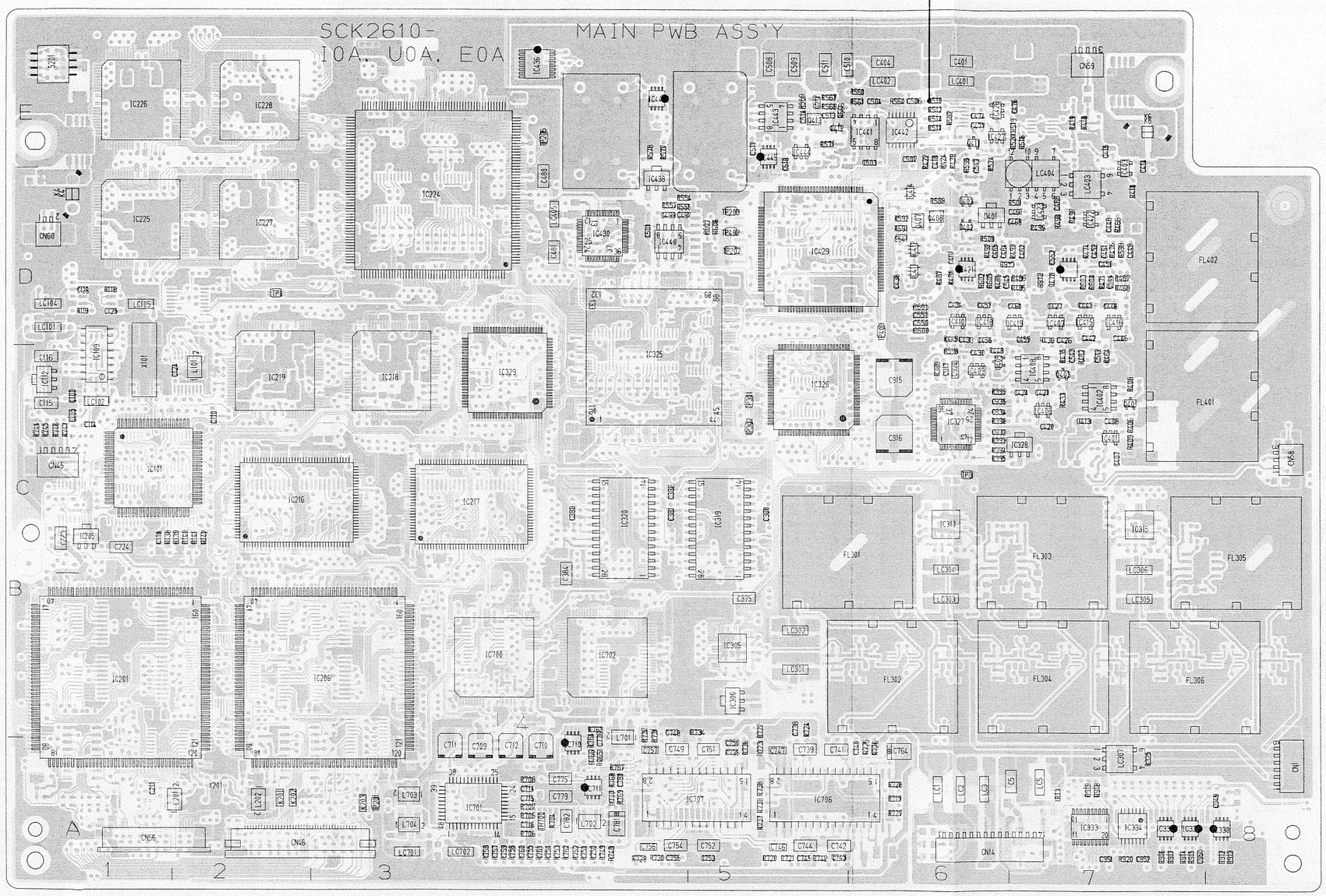

● **ADDRESS TABLE OF BOARD PARTS**

Each address may have an address error by one interval.

Side — A-1C — Y axis / X axis

IC101	A-2C	IC427	A-7E	R138	A-2B	R312	B-6B	R421	B-7E	R529	B-6D	R723	A-5A		
IC102	B-2C	IC428	B-6C	R139	A-2B	R313	B-6B	R422	A-6E	R530	B-4D	R724	A-6A		
IC103	B-1C	IC429	A-6D	R140	A-2B	R314	B-5B	R423	A-6E	R531	B-4D	R725	A-6A		
IC104	B-1C	IC430	A-4D	R141	A-2B	R315	B-7B	R424	A-6E	R532	B-4D	R726	A-6A		
IC105	B-1C	IC431	B-5D	R142	A-2B	R316	B-7B	R425	B-7E	R533	B-4D	R727	A-6A		
IC106	B-2D	IC432	B-4D	R201	B-2A	R317	B-7B	R426	B-7E	R534	B-5D	R728	A-6A		
IC107	B-2C	IC433	B-6D	R202	B-2A	R318	B-7C	R427	B-7E	R535	B-4D	R729	A-5A		
IC108	B-1C	IC434	B-6D	R203	B-1B	R319	B-7C	R428	B-7E	R536	B-4D	R730	A-5A		
IC109	A-1C	IC435	B-5D	R204	B-3A	R320	B-5B	R430	B-7C	R537	B-5D	R731	A-5A		
IC110	B-2C	IC436	A-4E	R205	B-1A	R321	B-7C	R431	B-7C	R538	B-5C	R732	A-5A		
IC111	B-1D	IC437	B-6D	R206	B-1A	R325	A-8A	R432	B-7C	R539	B-5C	R733	A-5A		
IC112	A-1C	IC438	A-5E	R207	B-1A	R326	B-8B	R433	A-7C	R540	B-5C	R734	A-5A		
IC201	A-2B	IC439	B-5D	R208	B-1A	R327	B-7B	R434	B-7C	R541	B-5C	R735	A-5A		
IC202	B-1A	IC440	A-5D	R209	B-1A	R328	B-7B	R435	A-7D	R542	B-4C	R736	A-5A		
IC203	B-2A	IC441	A-6E	R210	B-1A	R329	B-7B	R436	A-7D	R543	B-4C	R737	A-5A		
IC204	B-2A	IC442	A-6E	R211	B-2A	R330	B-7B	R437	B-7D	R544	B-4C	R738	A-5A		
IC205	A-1C	IC443	A-5E	R212	B-2A	R331	B-7A	R438	B-7D	R545	B-5C	R739	B-5A		
IC206	A-3B	IC444	A-6E	R213	B-2A	R332	B-7A	R439	B-7D	R546	B-5C	R740	B-6A		
IC207	B-2B	IC445	A-5E	R214	B-2A	R333	B-7B	R440	B-7C	R547	B-6D	R741	B-6A		
IC208	B-1B	IC447	A-5E	R215	B-2A	R334	B-7B	R441	B-7C	R548	B-4E	R742	A-6A		
IC209	B-1B	IC448	A-7D	R216	B-2A	R335	B-7B	R443	B-7C	R549	B-4E	R743	B-4B		
IC210	B-3A	IC700	A-4B	R217	B-2A	R336	B-7B	R444	B-7C	R550	B-5D	R744	A-1C		
IC211	B-3B	IC701	A-4A	R218	B-2A	R337	B-7B	R445	B-7D	R551	B-5D	R745	A-1C		
IC212	B-3B	IC702	A-4B	R219	B-2A	R338	B-7B	R446	B-7D	R552	B-5E	R746	A-1C		
IC213	B-3B	IC703	B-5B	R220	B-2A	R339	B-6B	R447	B-7D	R553	B-5D	R747	A-1C		
IC214	B-3A	IC704	B-4B	R221	B-2A	R340	B-7B	R448	A-7D	R554	A-5D	R748	A-4A		
IC215	B-2B	IC705	B-4A	R222	B-2A	R341	B-7B	R449	A-6D	R555	A-5D	R749	A-4A		
IC216	A-3C	IC706	A-5A	R223	B-2A	R342	B-7B	R450	B-6D	R556	B-5D	R750	A-4A		
IC217	A-4C	IC707	A-5A	R224	B-1E	R343	B-7C	R451	B-6D	R557	A-5D	R751	A-4A		
IC218	A-3C	IC708	B-6A	R225	B-1E	R344	B-7B	R452	B-6D	R558	B-5D	R752	A-4A		
IC219	A-2C	IC709	B-5A	R226	B-1E	R345	B-6B	R453	B-6D	R559	B-8C	R753	A-4A		
IC220	B-2C	IC710	A-4A	R227	B-1E	R350	B-9B	R454	B-6C	R560	A-6E	R754	A-4A		
IC221	B-3C	IC711	A-4A	R228	B-2A	R351	B-8B	R455	B-6D	R561	A-6E	R755	A-4A		
IC222	B-3C	IC712	B-4A	R229	B-2A	R352	B-8B	R456	B-6D	R562	B-6E	R756	A-4A		
IC223	B-3C	IC714	B-4B	R230	B-2A	R353	B-8B	R457	B-6D	R563	B-6E	R757	A-4A		
IC224	A-3D			R231	B-2A	R354	B-8B	R458	B-6D	R564	A-6E	R758	A-4A		
IC225	A-2D	Q101	B-1C	R232	B-2A	R355	B-8A	R459	B-6D	R565	B-6E	R759	A-4A		
IC226	A-2E	Q102	B-1D	R233	B-2A	R356	B-8A	R460	B-7D	R566	A-6E	R760	A-4A		
IC227	A-2D	Q401	A-8C	R234	B-2A	R357	B-8B	R461	B-7D	R567	A-6E	R761	A-4A		
IC228	A-2E	Q402	B-7C	R235	B-2A	R358	B-8B	R462	B-7D	R568	A-6E	R762	A-4A		
IC229	B-3D	Q403	A-7C	R236	B-2A	R359	B-8B	R463	B-7D	R569	A-6E	R763	A-4A		
IC230	B-3D	Q404	B-7C	R237	B-3A	R360	B-8B	R464	A-7D	R570	B-5E	R764	A-4A		
IC301	B-6B	Q405	A-7D	R238	B-3A	R361	B-8B	R465	B-7D	R571	A-6E	R765	A-4A		
IC302	B-6B	Q406	B-6C	R239	B-3A	R362	B-8B	R466	A-7D	R572	B-6E	R766	A-4A		
IC303	B-6B	Q407	A-6D	R240	B-3A	R363	B-8B	R467	A-7D	R573	B-5E	R767	A-4A		
IC304	B-7B	Q408	A-6D	R241	B-3A	R364	B-8B	R468	A-7D	R574	B-5E	R768	A-4A		
IC305	A-5B	Q409	B-7D	R242	B-3A	R365	B-8B	R469	A-7D	R575	B-5E	R769	A-5A		
IC306	A-5B	Q410	B-7D	R243	B-3A	R366	B-8B	R470	A-7D	R577	A-5E	R770	A-4A		
IC307	B-7B	Q411	A-7E	R244	B-3A	R367	B-8C	R471	A-7D	R578	A-5E	R771	B-4B		
IC308	B-7B	Q412	A-6E	R245	B-3A	R368	B-8C	R474	A-7D	R579	B-5E	R901	B-6C		
IC309	B-7B	Q413	A-6E	R246	B-3A	R369	B-8B	R475	A-7D	R580	B-5D	R902	B-1D		
IC310	A-6C			R247	B-3A	R371	B-5C	R476	B-6D	R582	A-6E	R903	B-5C		
IC311	B-8B	D101	B-1C	R248	B-3A	R372	B-8C	R478	B-7D	R583	B-6D	R910	B-4C		
IC312	B-8B	D401	A-7D	R249	B-3A	R373	B-6C	R479	B-7D	R584	B-6D	R911	B-4C		
IC313	B-8B	D402	A-7D	R250	B-3A	R374	B-5B	R480	B-7D	R585	B-6D	R912	A-8A		
IC314	B-8B	D403	A-7D	R251	B-3A	R375	B-5C	R481	B-7D	R589	A-6D	R913	A-8A		
IC315	A-8C	D404	B-8C	R252	B-3A	R376	B-5C	R482	A-7D	R590	B-6D	R914	A-8A		
IC316	B-5D	D405	B-6E	R253	B-3B	R377	B-5C	R483	B-7D	R591	A-6D	R915	A-8A		
IC317	B-5C	D406	B-6E	R254	B-3B	R378	B-4C	R484	B-7D	R592	A-6D	R916	A-8A		
IC318	B-5C	D700	B-4B	R255	B-1B	R379	B-5D	R485	A-7D	R593	A-7D	R917	A-8A		
IC319	A-5B			R256	B-3A	R380	B-5D	R486	A-7D	R594	B-8C	R918	A-7A		
IC320	A-5B	R1	A-7A	R257	B-3A	R381	B-5D	R487	A-6D	R595	A-7E	R919	A-7A		
IC321	B-5C	R2	B-8A	R258	B-3A	R382	B-5D	R488	A-6D	R596	B-7D	R920	A-7A		
IC325	A-5D	R3	B-8A	R259	B-3A	R383	B-5D	R489	A-7D	R597	B-7C	R921	B-6C		
IC326	A-6C	R4	B-8A	R260	B-3A	R384	B-5C	R492	A-7D	R598	A-6D	R922	B-5C		
IC327	A-6C	R5	B-8A	R261	B-3A	R385	B-4C	R493	A-7D	R599	B-7D	R923	B-4C		
IC328	A-7C	R6	B-8A	R262	B-3A	R386	B-6C	R494	B-6D	R600	A-6D				
IC329	A-4C	R7	B-8A	R263	B-3A	R387	B-6C	R497	A-7D	R601	A-6D	VR401	B-7C		
IC330	A-8A	R8	B-8A	R264	B-2B	R388	B-6C	R498	A-7D	R602	A-7D	VR402	B-7D		
IC331	A-8A	R9	B-8A	R265	B-2B	R389	A-6C	R499	A-7D	R603	A-7D	VR403	B-6D		
IC332	A-8A	R10	B-8A	R266	B-2C	R390	B-7C	R500	B-7D	R604	A-7D	VR404	B-7D		
IC333	A-7A	R11	B-8A	R267	B-2C	R391	B-7C	R501	A-7D	R605	A-7D	VR405	B-7D		
IC334	A-8A	R12	B-8A	R268	B-3E	R392	B-7C	R502	B-7D	R606	A-5D	VR406	B-5E		
IC401	A-7C	R13	B-7A	R269	B-4E	R393	A-7C	R503	B-7D	R607	A-5D	VR407	B-7D		
IC402	A-7C	R14	B-7A	R270	B-3D	R394	A-7C	R504	B-7D	R608	B-6D				
IC403	A-7E	R15	B-7A	R271	B-3D	R395	A-7C	R505	B-7D	R609	B-5D	C1	B-6A		
IC404	B-7E	R16	B-7A	R272	B-3D	R396	B-7C	R506	B-7D	R700	B-3A	C2	B-1E		
IC405	B-6E	R17	B-7A	R273	B-3D	R397	B-7C	R507	B-7D	R701	B-3A	C3	B-3E		
IC406	A-7C	R99	B-7D	R274	B-4D	R398	A-7C	R508	B-7D	R702	B-3A	C4	B-7A		
IC407	A-7D	R101	B-2D	R275	B-4D	R399	A-7C	R509	A-7D	R703	B-3A	C5	A-7A		
IC408	A-7D	R102	B-1D	R276	B-4D	R401	B-7C	R510	A-6E	R704	A-4A	C6	B-7A		
IC409	A-7C	R103	B-2C	R277	B-4D	R402	B-7C	R511	A-6E	R705	A-4A	C7	B-7A		
IC410	A-7D	R104	B-1C	R278	B-4D	R404	B-7C	R512	A-6E	R706	A-4A	C8	B-7A		
IC411	A-6D	R105	B-2D	R279	B-4D	R405	B-7C	R513	B-7E	R707	A-4A	C101	A-1C		
IC412	A-6D	R106	B-1C	R280	B-3D	R406 •	A-8C	R514	A-6E	R708	A-4A	C102	B-1C		
IC413	B-6D	R107	B-1C	R281	B-3D	R407	B-7C	R515	B-7E	R709	B-4A	C103	B-1D		
IC414	A-6D	R108	B-1C	R282	B-3D	R408	A-8C	R516	B-7E	R710	B-4A	C104	B-1C		
IC415	A-7D	R109	B-2C	R283	B-3D	R409	A-8C	R517	B-7E	R711	B-4A	C105	A-1C		
IC416	A-7D	R110	B-2C	R301	B-7B	R410	A-8D	R518	A-7E	R712	B-4A	C106	B-2C		
IC417	B-8D	R111	B-1B	R302	B-6B	R411	B-8E	R519	A-7E	R713	B-4A	C107	B-2C		
IC418	A-7D	R112	B-1C	R303	B-6B	R412	B-7C	R520	A-7E	R714	B-4B	C108	B-1C		
IC419	A-7D	R113	B-1C	R304	B-6B	R413	B-7C	R521	B-7E	R715	B-5B	C109	B-2C		
IC420	B-7D	R114	B-1B	R305	B-6B	R414	B-7E	R522	B-7E	R716	B-4B	C110	A-2C		
IC421	A-7D	R115	B-1B	R306	B-6A	R415	B-7E	R523	B-7E	R717	B-5B	C111	B-1D		
IC422	A-7D	R116	B-2D	R307	B-6A	R416	B-7E	R524	A-7E	R718	B-4A	C112	B-1D		
IC423	A-7D	R117	B-2C	R308	B-6B	R417	B-7E	R525	B-7E	R719	A-6A	C113	B-2C		
IC424	B-7E	R118	A-1D	R309	B-6B	R418	A-7E	R526	B-5C	R720	A-5A	C114	A-1C		
IC425	B-6E	R119	A-1D	R310	B-6B	R419	A-7E	R527	B-5C	R721	A-5A	C115	A-1C		
IC426	A-7E	R134	B-2C	R311	B-6B	R420	B-7E	R528	B-6D	R722	A-5A	C116	A-1D		

4-22

— SIDE B —

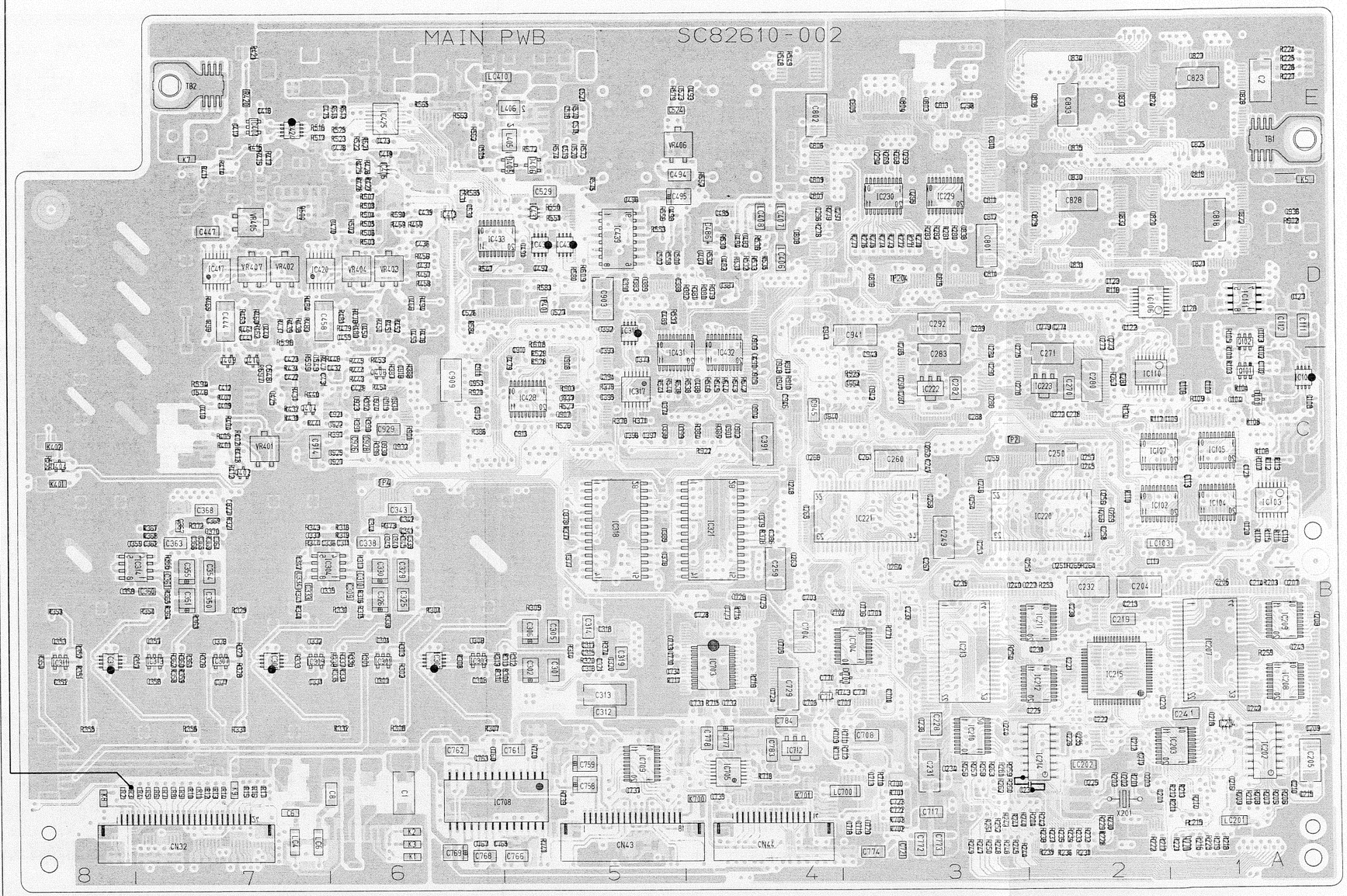

C117	B-2B	C288	B-3C	C397	B-5C	C502	B-5D	C759	B-5A	C936	B-1D	LC301	A-6B
C118	A-2B	C289	B-3D	C398	B-5C	C503	A-6E	C760	B-6A	C937	B-5C	LC302	A-6B
C119	B-1B	C290	B-3C	C399	B-5C	C504	A-6E	C761	B-6A	C940	B-4C	LC303	A-6B
C120	B-1C	C291	B-3C	C401	A-7E	C505	B-6E	C762	B-6A	C941	B-4D	LC304	A-6B
C121	B-1C	C292	B-3D	C402	B-8C	C506	A-6E	C763	B-6A	C942	B-4C	LC305	A-8B
C122	B-2D	C293	B-3E	C403	B-7E	C507	A-6E	C764	A-6A	C943	B-4D	LC306	A-8B
C123	B-2D	C294	B-4E	C404	A-6E	C508	A-5E	C765	B-6A	C944	B-4D	LC307	A-7A
C124	A-2C	C295	B-3D	C405	B-6E	C509	A-6E	C766	B-6A	C945	B-4C	LC401	A-7E
C125	A-1D	C296	B-4D	C406	B-8C	C510	A-6E	C767	B-6A	C946	B-4C	LC402	A-6E
C126	B-2D	C297	B-4D	C407	A-7C	C511	A-6E	C768	B-6A	C947	B-4C	LC403	A-7E
C127	B-1D	C298	B-3E	C408	A-7C	C512	A-6E	C769	B-6A	C948	B-4C	LC404	A-7E
C128	A-1D	C301	B-5B	C409	B-7C	C513	A-6E	C770	B-4B	C949	A-8A	LC405	A-4D
C201	B-2A	C302	B-6B	C410	B-8C	C514	A-6E	C771	B-4B	C950	A-8A	LC406	B-4D
C202	B-2A	C303	B-6B	C412	B-7C	C515	B-5E	C772	B-3A	C951	A-7A	LC407	B-4D
C203	B-2A	C304	B-6B	C413	A-7C	C516	B-5E	C773	B-3A	C952	A-8A	LC408	B-4D
C204	B-2B	C305	B-5B	C414	A-8E	C517	A-5E	C774	B-4A	C953	B-6C	LC410	B-6E
C205	B-1A	C306	B-6B	C415	A-7E	C518	A-5E	C775	A-4A	C954	B-4C	LC700	B-4A
C206	B-2B	C307	B-6B	C416	B-7E	C519	B-5E	C776	A-4A			LC701	A-3A
C207	B-1B	C308	B-6B	C417	B-7E	C520	B-5E	C777	B-4A	L101	A-2C	LC702	A-4A
C208	B-1B	C309	B-7B	C418	A-6E	C521	B-5E	C778	B-5A	L201	A-2A		
C209	B-1A	C310	B-7B	C419	B-6E	C523	B-5E	C779	A-4A	L202	A-2A	S201	A-1E
C210	B-1A	C311	B-7B	C420	A-7C	C524	B-5E	C780	A-5A	L405	B-6E		
C211	A-2A	C312	B-5B	C421	A-7C	C525	B-6D	C781	A-4A	L406	B-6E	X101	A-2D
C212	B-2A	C313	B-5B	C422	B-7C	C526	B-6D	C782	A-4A	L701	A-5A	X201	A-2A
C213	B-2B	C314	B-5B	C423	B-7D	C527	B-5D	C783	B-4A	L702	A-4A	X401	A-5E
C214	B-1B	C315	B-5B	C424	A-7C	C529	B-6D	C784	B-4A	L703	A-3A	X402	A-4E
C215	B-1A	C316	B-5B	C425	B-7C	C530	B-6D	C801	B-3D	L704	A-3A		
C216	B-2A	C317	B-5B	C426	A-7D	C531	B-6D	C802	B-4E				
C217	B-2A	C318	B-5B	C427	A-7D	C541	A-6D	C803	B-3E	TP1	A-2D		
C218	B-2A	C319	B-5B	C429	B-7C	C542	A-7D	C804	B-3E	TP2	B-3C		
C219	B-2B	C320	B-5B	C430	A-7D	C543	A-7D	C805	B-4E	TP3	A-7C		
C220	B-2B	C321	B-5B	C431	B-7C	C544	A-7D	C806	B-4E	TP4	B-6C		
C221	B-2B	C322	B-7C	C432	B-7C	C545	A-7D	C807	B-4D	TP201	A-3A		
C222	B-2A	C325	B-6B	C433	A-7D	C546	B-8C	C808	B-4D	TP202	A-5D		
C223	A-1B	C326	B-6B	C434	A-6D	C547	A-7E	C809	B-4E	TP203	A-5D		
C224	A-2B	C327	B-7B	C436	B-6D	C548	B-7C	C810	B-3E	TP204	B-3D		
C225	B-2A	C328	B-7B	C437	B-6D	C549	B-7D	C811	B-3D	TP205	A-4E		
C226	B-2A	C329	B-6B	C438	A-6D	C550	A-6D	C812	B-3D	TP301	A-5C		
C227	B-3B	C330	B-6B	C439	B-6D	C551	A-6D	C813	B-3E	TP302	A-5C		
C228	B-3A	C331	B-7B	C440	B-7D	C552	A-7D	C814	B-3D	TP401	B-6D		
C229	B-3B	C332	B-7B	C441	B-7D	C700	B-4B	C815	B-3D	TP402	A-5D		
C230	B-3B	C333	B-7B	C442	A-7D	C701	B-4B	C816	B-4D	TP403	A-6D		
C231	B-3A	C334	B-7B	C443	A-7D	C702	B-4B	C817	B-4D				
C232	B-2B	C335	B-7B	C444	B-7D	C703	B-4B	C818	B-2D	K1	B-6A		
C233	B-3B	C336	B-7B	C445	A-7D	C704	B-4B	C819	B-2E	K2	B-6A		
C234	B-3A	C337	B-7C	C446	A-7D	C705	B-4B	C820	B-2D	K3	B-6A		
C235	B-2A	C338	B-7B	C447	B-7D	C706	B-4B	C821	B-2D	K4	A-1D		
C236	B-3A	C339	B-6B	C448	A-7D	C707	B-4B	C822	B-1D	K5	B-1E		
C237	B-3A	C340	B-6B	C449	A-8D	C708	B-4A	C823	B-2E	K6	A-8E		
C238	B-2B	C341	B-6C	C450	A-7D	C709	A-4A	C824	B-2E	K7	B-8E		
C239	B-3B	C342	B-6C	C451	A-7D	C710	A-4A	C825	B-2E	K8	B-8A		
C240	B-3B	C343	B-6C	C452	A-7D	C711	A-4A	C826	B-1E	K9	B-7A		
C241	B-2A	C344	B-7C	C453	B-6D	C712	A-4A	C827	B-2E	K201	A-3A		
C242	B-1B	C345	B-6B	C454	B-7D	C713	B-4A	C828	B-2D	K202	A-3A		
C243	B-1B	C350	B-8B	C455	B-7D	C714	A-4A	C829	B-3D	K203	A-3A		
C244	B-3A	C351	B-8B	C456	A-7D	C715	A-4A	C830	B-2E	K401	B-8C		
C245	B-2C	C352	B-8B	C457	A-7D	C716	A-4A	C831	B-2D	K402	B-8C		
C246	B-3C	C353	B-8B	C458	B-7D	C717	B-3A	C832	B-2D	K700	B-5A		
C247	B-3C	C354	B-8B	C459	A-7D	C718	B-4A	C833	B-2E	K701	B-4A		
C248	B-4C	C355	B-8B	C460	A-7D	C719	B-4A	C834	B-2E				
C249	B-3C	C356	B-8B	C461	A-6D	C720	B-4A	C835	B-2E	TH700	A-4A		
C250	B-3C	C357	B-8B	C462	A-7D	C721	B-3A	C836	B-3E				
C251	B-2B	C358	B-8B	C463	A-7D	C722	B-3A	C837	B-2E	TB1	B-1E		
C252	B-3B	C359	B-8B	C464	A-7D	C723	B-3A	C838	B-3D	TB2	B-8E		
C253	B-3B	C360	B-8B	C465	A-7D	C724	B-4B	C901	B-4C				
C254	B-3C	C361	B-8B	C466	B-6D	C725	B-4B	C902	B-4C	CN1	A-8A		
C255	B-3C	C362	B-8B	C467	A-7D	C726	B-4B	C903	B-5D	CN14	A-7A		
C256	B-2C	C363	B-8B	C468	A-7D	C727	B-4B	C904	B-4C	CN32	B-8A		
C257	B-2C	C364	B-7B	C469	A-7D	C728	B-5B	C905	B-4C	CN43	B-5A		
C258	B-2C	C365	B-8B	C470	B-7D	C729	B-4B	C906	B-4D	CN44	B-4A		
C259	B-4B	C366	B-8B	C473	B-6E	C730	B-5B	C907	B-5C	CN45	A-1C		
C260	B-3C	C367	B-8C	C474	A-7E	C731	B-5B	C908	B-5D	CN46	A-3A		
C261	B-4C	C368	B-8C	C475	B-7E	C732	B-4B	C909	B-6C	CN56	A-2A		
C262	B-3C	C369	B-7C	C476	A-7E	C733	B-5B	C910	B-6D	CN58	A-8C		
C263	B-4B	C370	B-7C	C477	A-7E	C734	B-5B	C911	B-6C	CN59	A-7E		
C264	B-3B	C373	B-5D	C478	B-7E	C735	B-5A	C912	B-6C	CN60	A-1D		
C265	B-4C	C374	B-5C	C479	B-6D	C736	B-4B	C913	B-6C				
C266	B-4C	C375	A-5B	C480	A-4E	C737	B-5A	C914	B-7C	FL301	A-6B		
C267	B-3B	C376	B-5B	C481	A-4D	C738	A-6A	C915	A-6C	FL302	A-6B		
C268	B-3C	C377	B-5B	C482	B-4D	C739	A-6A	C916	A-6C	FL303	A-7B		
C269	B-2C	C378	B-5C	C483	B-4D	C740	A-6A	C917	A-6C	FL304	A-7B		
C270	B-2C	C379	B-4C	C484	B-4D	C741	A-6A	C918	B-6C	FL305	A-8B		
C271	B-3D	C380	A-5C	C485	B-4D	C742	A-6A	C919	B-6C	FL306	A-8B		
C272	B-2C	C381	A-5C	C486	B-5D	C743	A-6A	C920	A-6C	FL401	A-8C		
C273	B-2D	C382	A-5C	C487	B-5D	C744	A-6A	C921	B-7C	FL402	A-8D		
C274	B-2D	C383	A-4C	C488	B-5C	C745	A-6A	C922	B-7C				
C275	B-3D	C384	A-4B	C489	B-5D	C746	A-5A	C923	B-7C	LC1	A-6A		
C276	B-3C	C385	B-5C	C490	B-4D	C747	A-5A	C924	B-7C	LC2	A-7A		
C277	B-2D	C386	B-4C	C491	B-6D	C748	A-5A	C925	B-7C	LC3	A-7A		
C278	B-2C	C387	B-4D	C492	B-6D	C749	A-5A	C926	B-7C	LC4	B-7A		
C279	B-3D	C388	B-5D	C493	B-5E	C750	A-5A	C927	B-7C	LC5	A-7A		
C280	B-2C	C389	B-5D	C494	B-5E	C751	A-5A	C928	B-7C	LC6	B-7A		
C281	B-2C	C390	B-5D	C495	B-5D	C752	A-5A	C929	B-6C	LC101	A-1D		
C282	B-3C	C391	B-4C	C496	B-5D	C753	A-5A	C930	B-6C	LC102	A-1C		
C283	B-3D	C392	B-5D	C497	A-5D	C754	A-5A	C931	B-6C	LC103	B-2B		
C284	B-3D	C393	B-5D	C498	B-5D	C755	A-5A	C932	B-6C	LC104	A-1D		
C285	B-3D	C394	B-5C	C499	A-5D	C756	A-5A	C933	A-7C	LC105	A-2D		
C286	B-3C	C395	B-5C	C500	B-5D	C757	A-5A	C934	A-7C	LC201	B-2A		
C287	B-3C	C396	B-5C	C501	A-5D	C758	B-5A	C935	A-7C	LC202	B-2A		

4-23

– INNER PATTERN (SIDE A) –

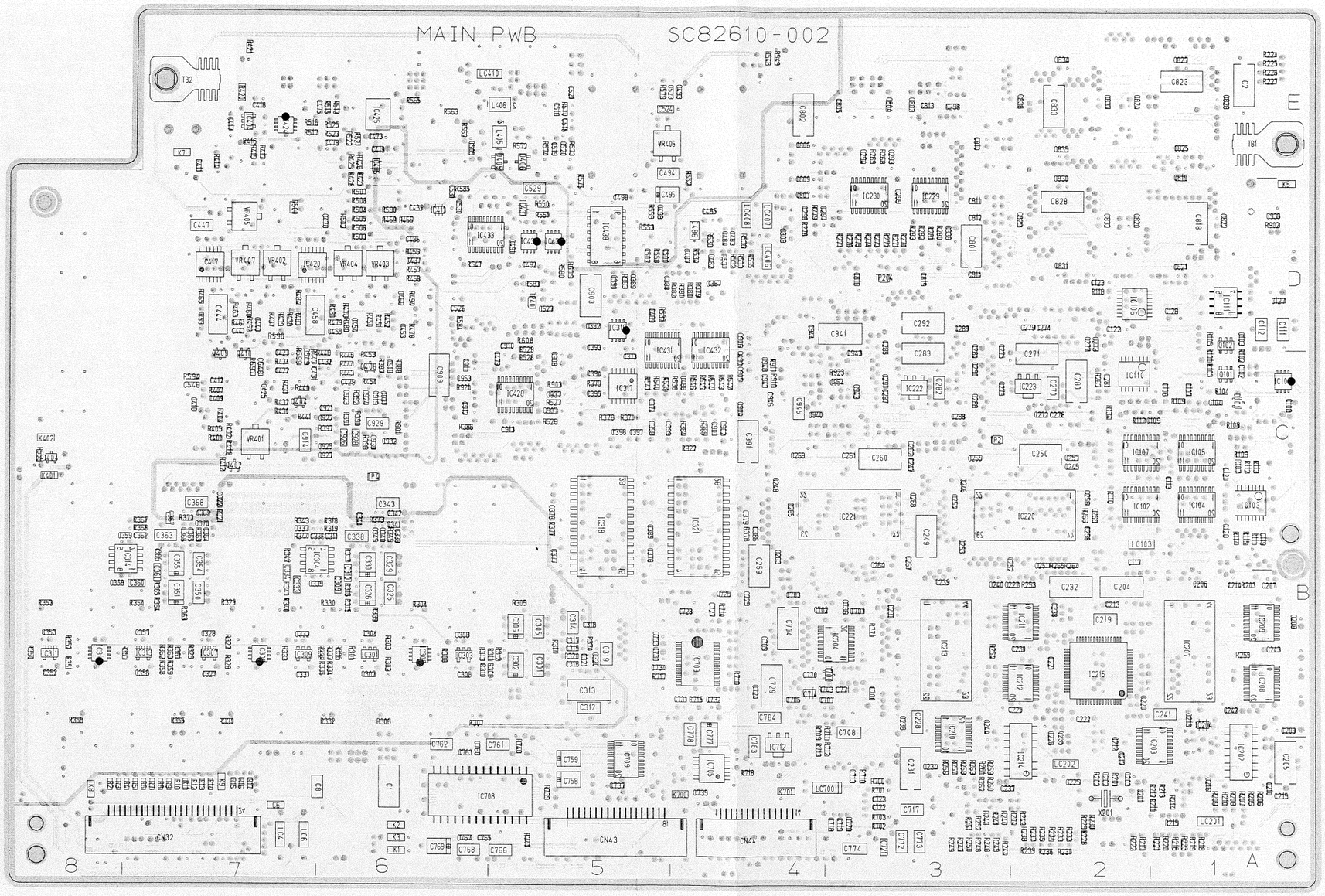

4-24

4.25 MT SCHEMATIC DIAGRAM

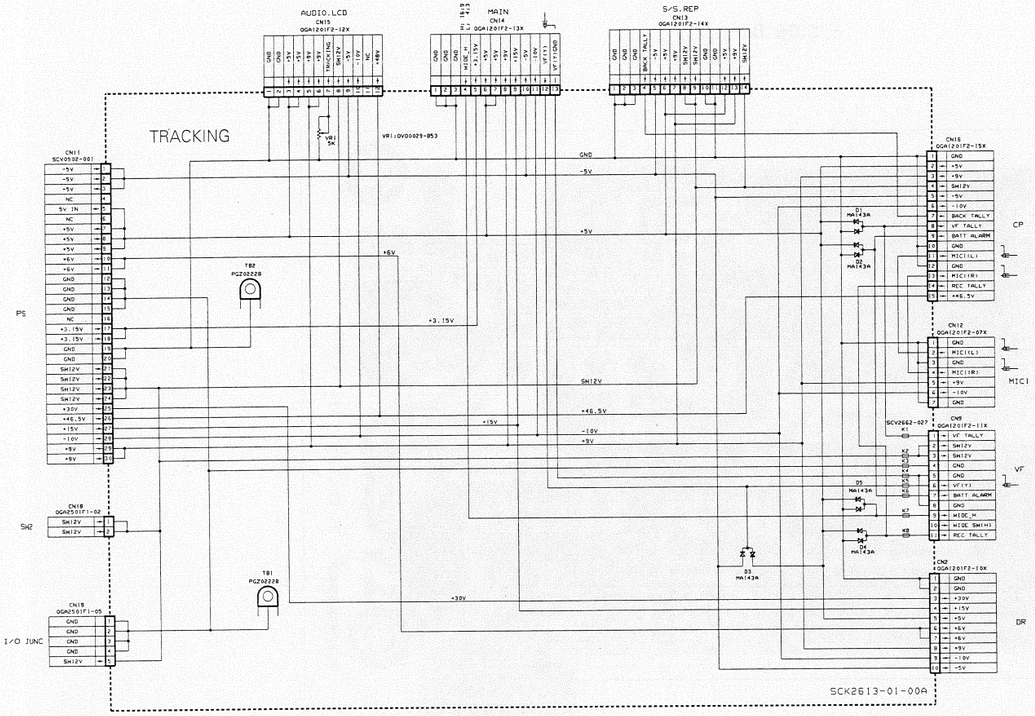

4.31 I/O JUNC SCHEMATIC DIAGRAM

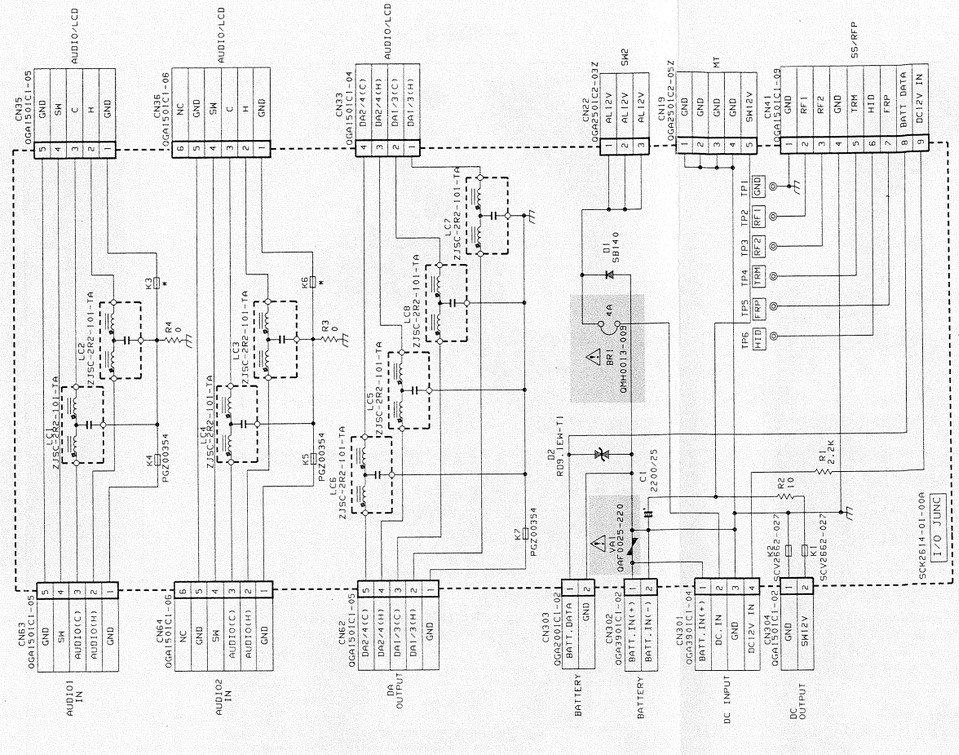

4.29 SW1 SCHEMATIC DIAGRAM

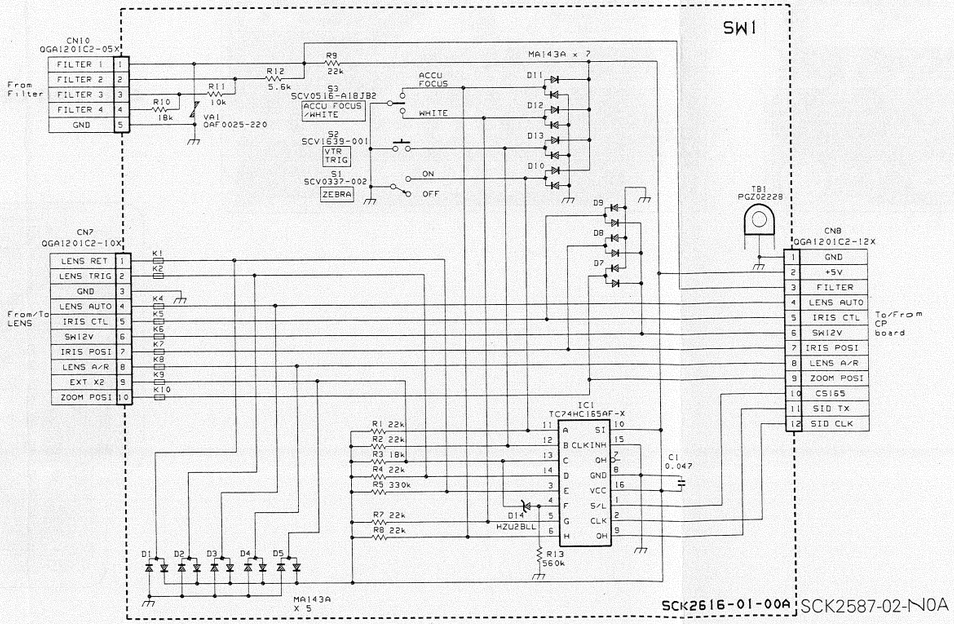

4-25

4.27 MT CIRCUIT BOARD

– SIDE A –

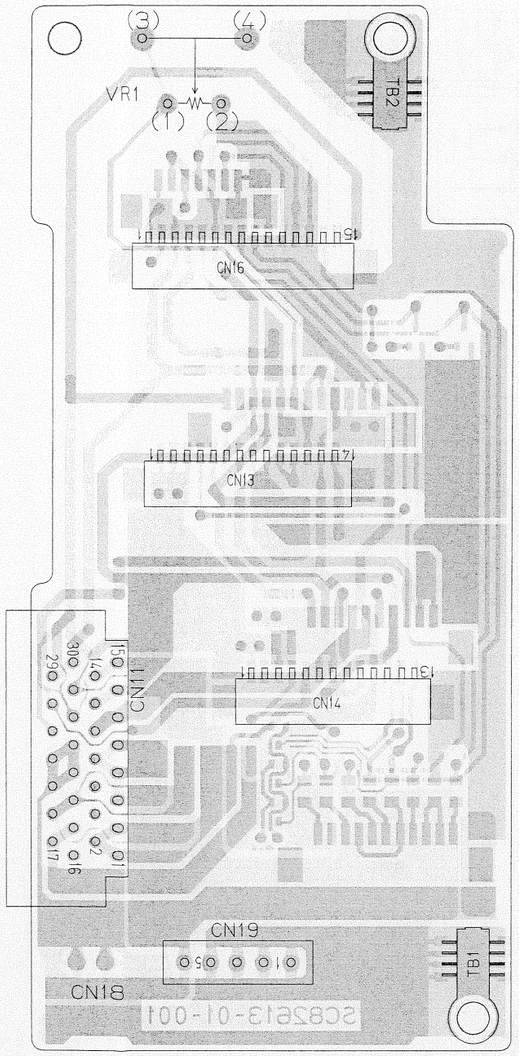

– SIDE B –

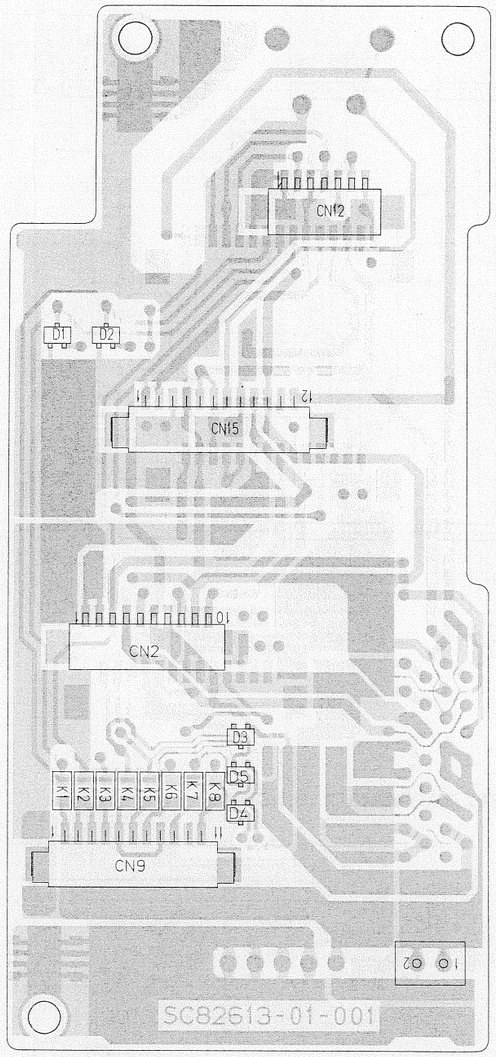

4.31 I/O JUNC CIRCUIT BOARD

– SIDE B –

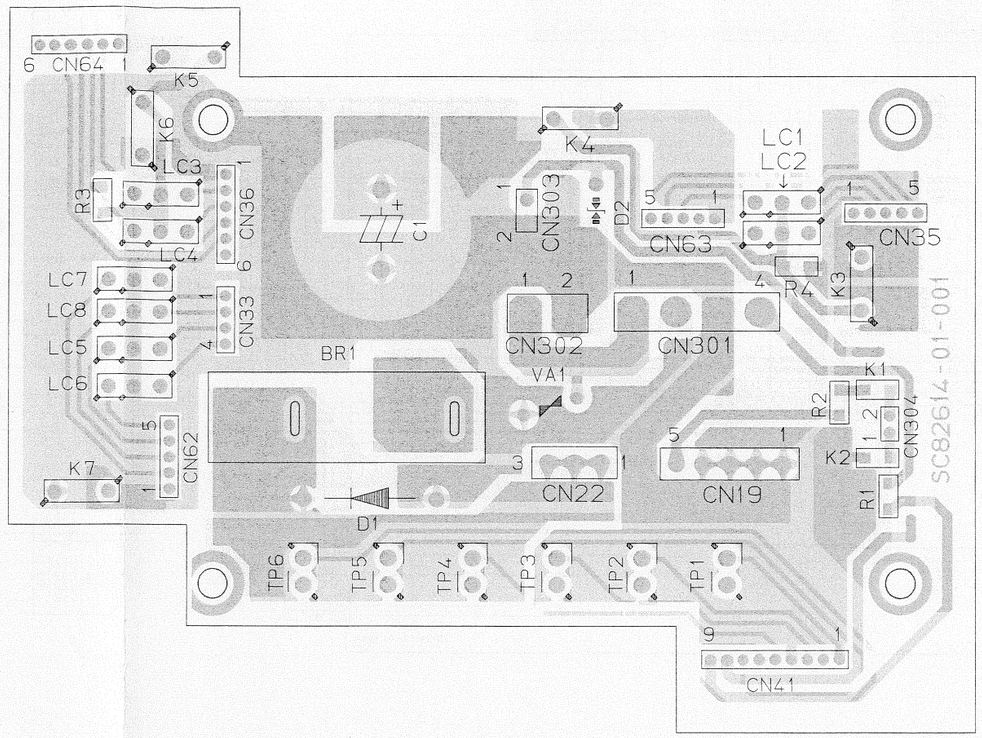

4.30 SW1 CIRCUIT BOARD

– SIDE A –

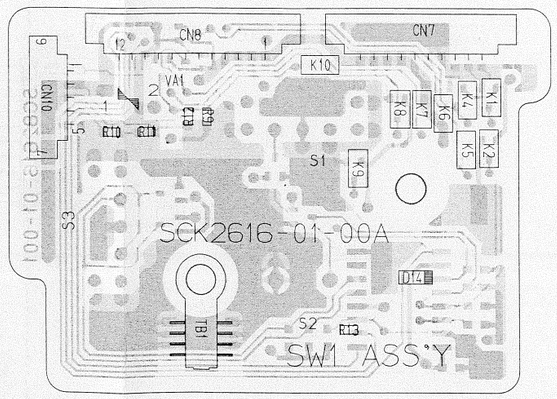

– SIDE B –

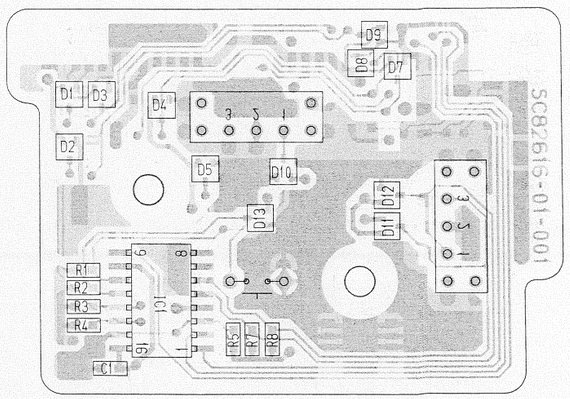

4-26

4.35 IC BLOCK DIAGRAMS (Camera part only)

■ AD603AR-X [ANALOG DEVICES] (Variable Gain CTL Amplifier)

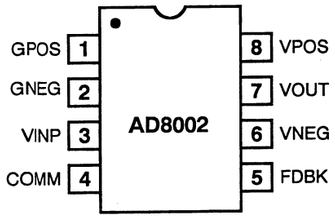

■ Pin funoction

Pin No.	Pin Name
1	GPOS Gain CTL Input "HI"
2	GNEG Gain CTL Input "LOW"
3	VINP Amp. Input
4	COMM GND
5	FDBK Feedback
6	VNEG Vss
7	VOUT Output
8	VPOS V_{DD}

■ AK4323VF-X [ASAHIKASEI] (20 Bit 2ch D/A Converter)

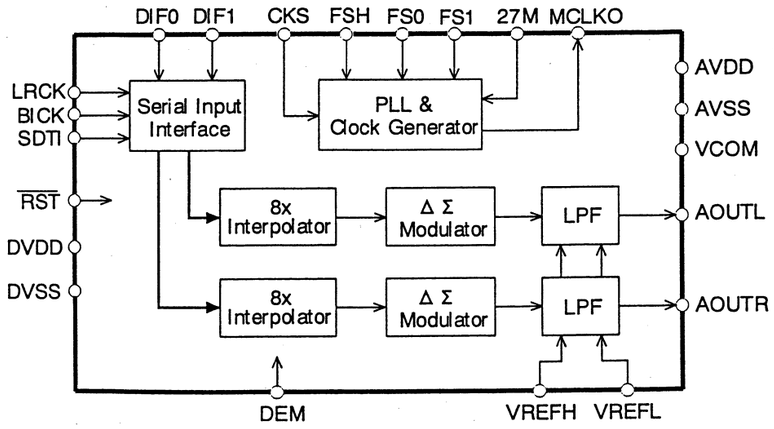

■ CY62256LL70SN-X [CYPRESS] (32k x 8 Static RAM)

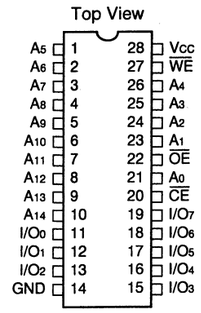

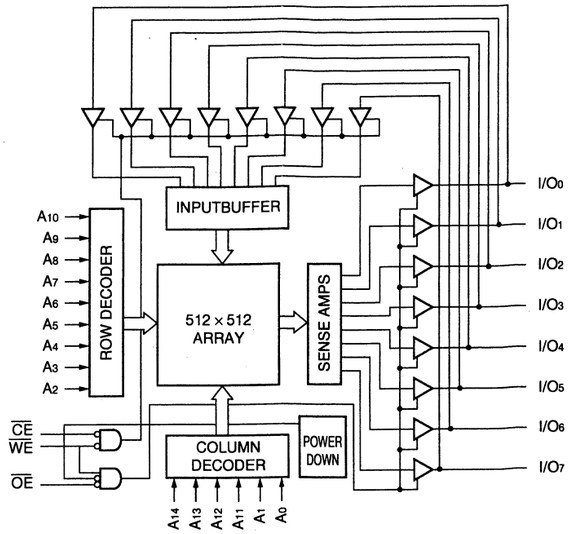

■ AK5340-VS [ASAHIKASEI] (18 bit 2Channel A/D Converter)

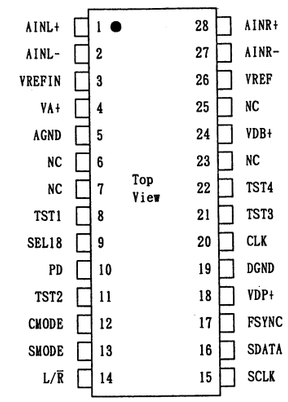

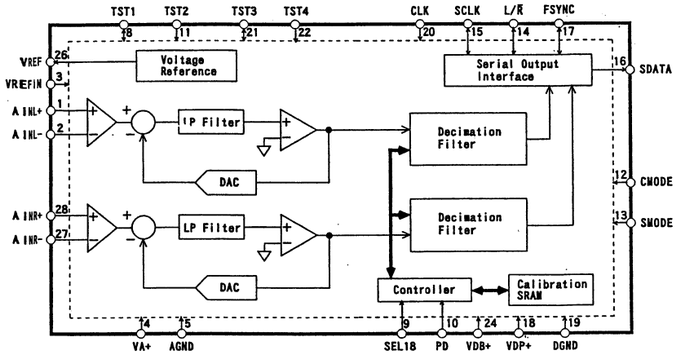

■ AD8011AR-X [ANALOG DEVICES] (Current Feedback Amplifier)

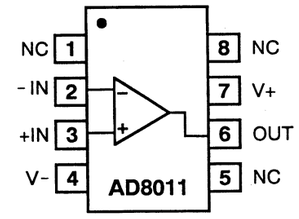

■ AD8041AR-XE [ANALOG DEVICES] (Op.Amplifier)

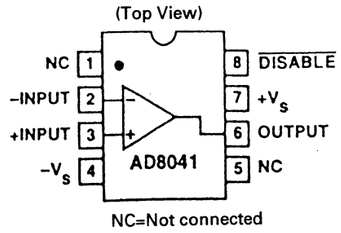

NC=Not connected

■ BU4094BCFV-X [ROHM] (8-Stage Shift/Store Register)

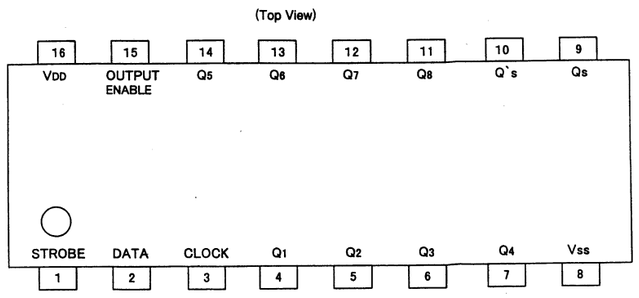

■ CLC450AJM5-X [NATIONAL SEMICONDUCTOR] (Current Feedback Amplifier)

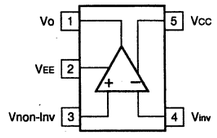

Top View

■ DS26C32ATM-X [National Semi Conductor] (Quad Differential Line Receiver)

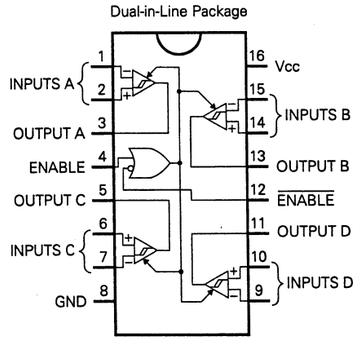

Top View

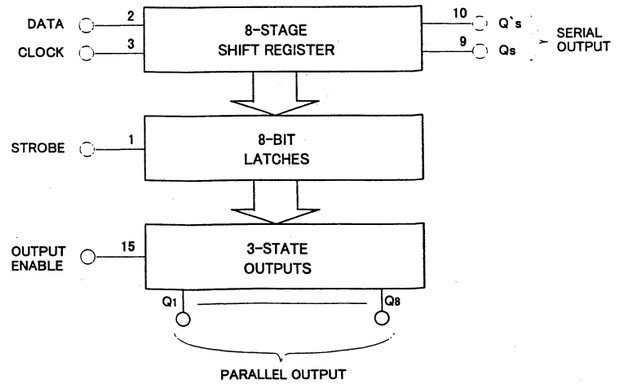

4-27

■ CXD2422R [SONY]
(CCD Camera Timing Generator)

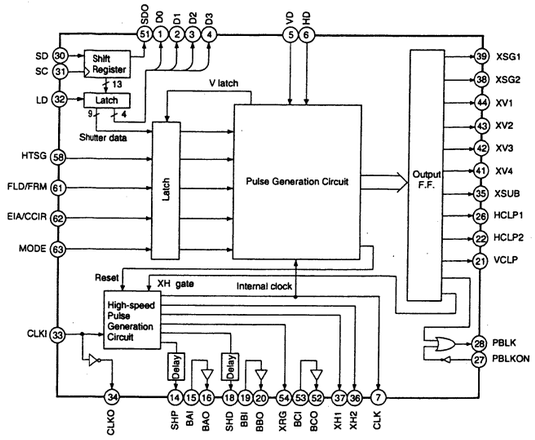

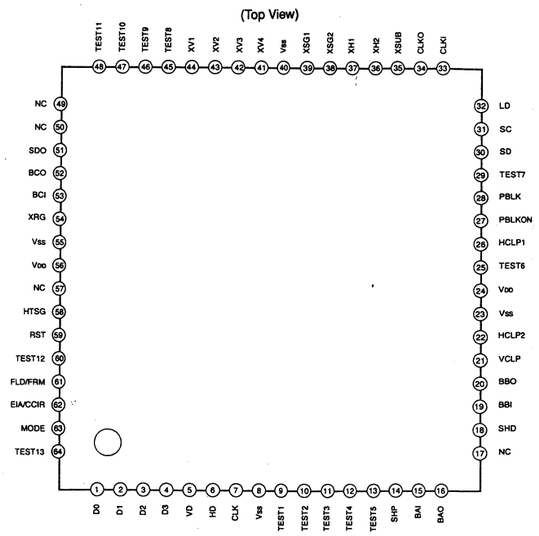

Pin Description

Pin No.	Symbol	I/O	Description
1	D0	O	Extended I/O output.
2	D1	O	Extended I/O output.
3	D2	O	Extended I/O output.
4	D3	O	Extended I/O output.
5	VD	I	Vertical sync signal input. (With pull-up resistor)
6	HD	I	Horizontal sync signal input. (With pull-up resistor)
7	CLK	O	Two frequency divider output of Pin 33.
8	Vss	—	
9	TEST1	I	Test input (normally Low). (With pull-down resistor)
10	TEST2	I	Test input (normally Low). (With pull-down resistor)
11	TEST3	I	Test input (normally Low). (With pull-down resistor)
12	TEST4	I	Test input (normally Low). (With pull-down resistor)
13	TEST5	I	Test input (normally Low). (With pull-down resistor)
14	SHP	O	CCD output precharge level sampling pulse output.
15	BAI	I	Buffer input (for phase adjustment of SHP). (With pull-up resistor)
16	BAO	O	Non-inversed output of BAI.
17	(NC)	—	
18	SHD	O	CCD output signal level sampling pulse output.
19	BBI	I	Buffer input (for phase adjustment of SHD). (With pull-up resistor)
20	BBO	O	Non-inversed output of BBI.
21	VCLP	O	Vertical clamp pulse output.
22	HCLP2	O	Horizontal (dummy bit block) clamp pulse output.
23	Vss	—	
24	VDD	—	
25	TEST6	I	Test input (normally High). (With pull-up resistor)
26	HCLP1	O	Horizontal (OPB block) clamp pulse output.
27	PBLKON	I	Output ON/OFF of PBLK. (High: ON) (With pull-up resistor).
28	PBLK	O	Preblanking pulse output.
29	TEST7	I	Test input (normally High). (With pull-up resistor)
30	SD	I	Serial data input for electronic shutter control. (With pull-up resistor)
31	SC	I	Clock input for electronic shutter control. (With pull-up resistor)
32	LD	I	Latch pulse input for electronic shutter control. (With pull-up resistor)
33	CLKI	I	Clock input.
34	CLKO	O	Inversed output of CLKI.
35	XSUB	O	Substrate pulse output for electronic shutter.
36	XH2	O	Clock output for horizontal register drive.
37	XH1	O	Clock output for horizontal register drive.
38	XSG2	O	Sensor charge readout pulse output.
39	XSG1	O	Sensor charge readout pulse output.
40	Vss	—	
41	XV4	O	Clock output for vertical register drive.
42	XV3	O	Clock output for vertical register drive.
43	XV2	O	Clock output for vertical register drive.
44	XV1	O	Clock output for vertical register drive.
45	TEST8	O	Test output (normally open).
46	TEST9	O	Test output (normally open).
47	TEST10	O	Test output (normally open).
48	TEST11	O	Test output (normally open).
49	(NC)	—	
50	(NC)	—	
51	SDO	O	Serial data output for electronic shutter control.
52	BCO	O	Non-inversed output of BCI.
53	BCI	I	Buffer input (for phase adjustment of XRG). (With pull-up resistor)
54	XRG	O	Reset gate pulse output of output block.
55	Vss	—	
56	VDD	—	
57	(NC)	—	
58	HTSG	I	Readout pulse (XSG1, 2) ON/OFF. (High: OFF) (With pull-down resistor)
59	RST	I	Test input (normally High). (With pull-up resistor)
60	TEST12	I	Test input (normally Low). (With pull-up resistor)
61	FLD/FRM	I	High: Field accumulation mode, Low: Frame accumulation mode. (With pull-up resistor)
62	EIA/CCIR	I	High: EIA, Low: CCIR. (With pull-up resistor)
63	MODE	I	High: Component digital mode, Low: Composite digital mode. (With pull-up resistor)
64	TEST13	I	Test input (normally Low). (With pull-up resistor)

Note) TEST12 and TEST13 have a built-in pull-up resistor.
Be sure to fix them at Low.

4-28

Timing Chart (1) EIA vertical direction

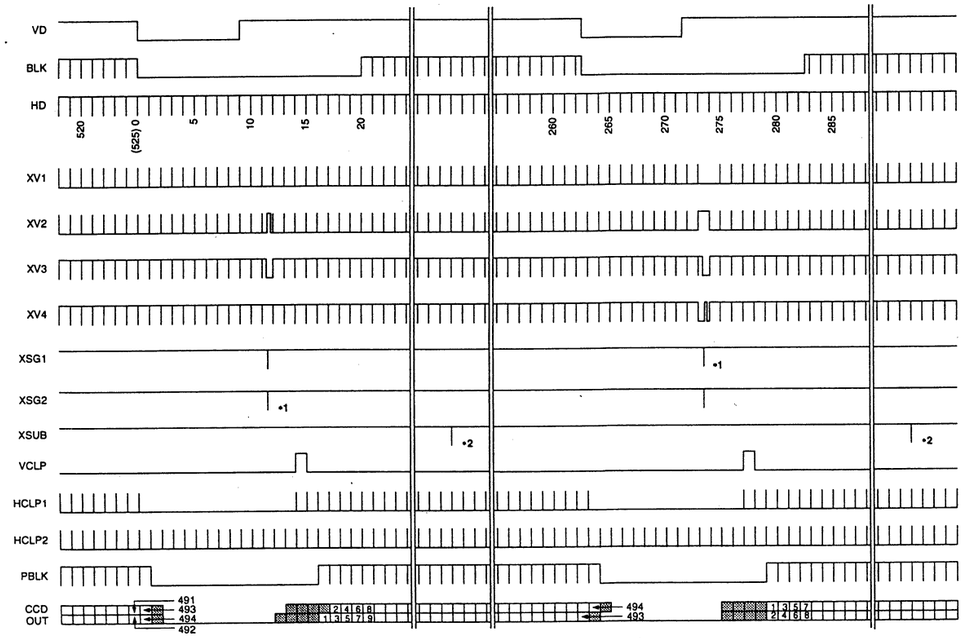

Timing Chart (2) CCIR vertical direction

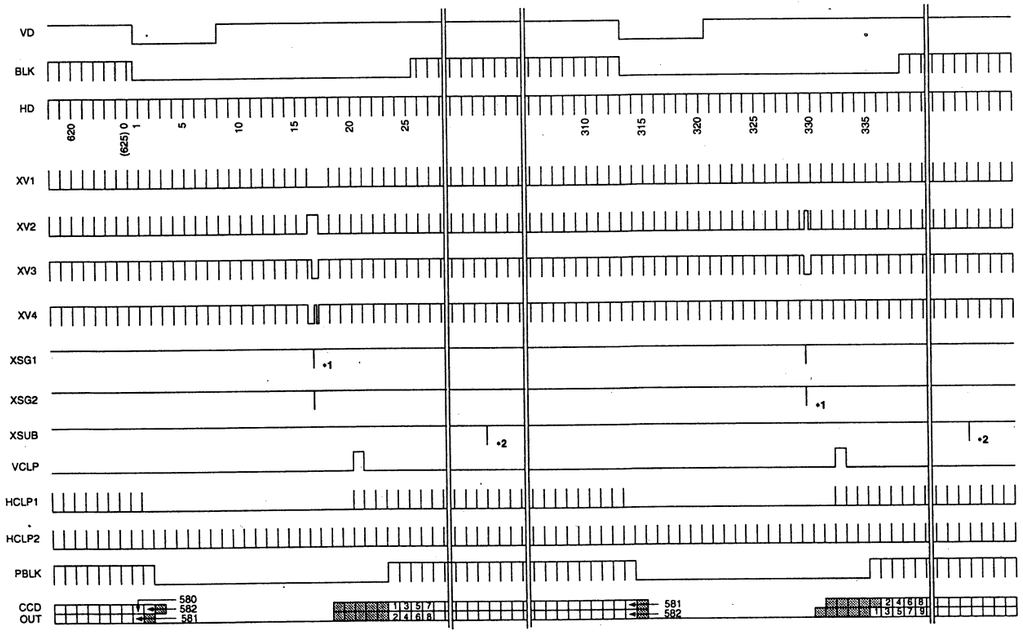

*1 These pulses are not output during frame accumulation.

*2 These pulses are output at the position determined by shutter data.

Timing Chart (3) EIA horizontal direction, Component digital mode

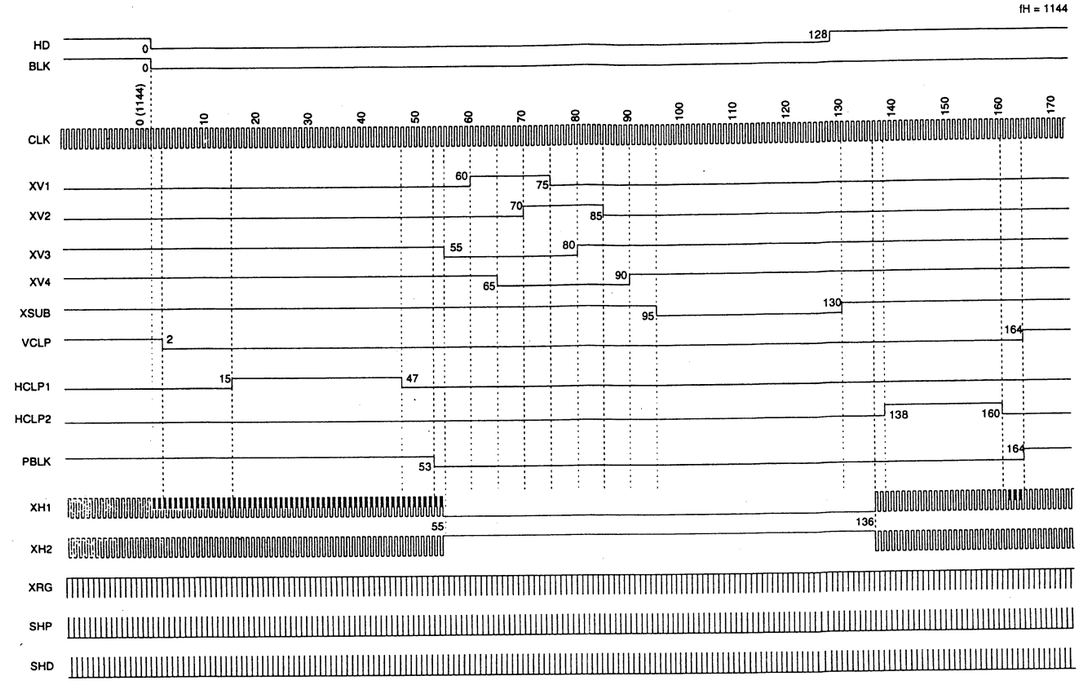

Timing Chart (4) EIA horizontal direction, Composite digital mode

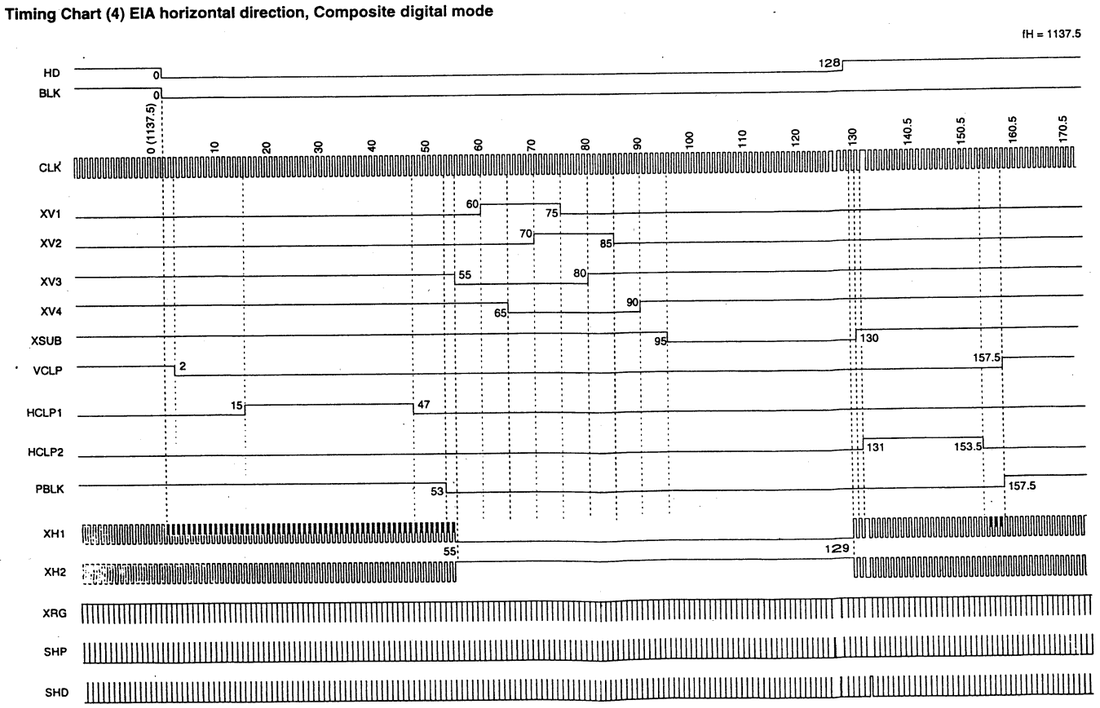

Timing Chart (5) CCIR horizontal direction, Component digital mode

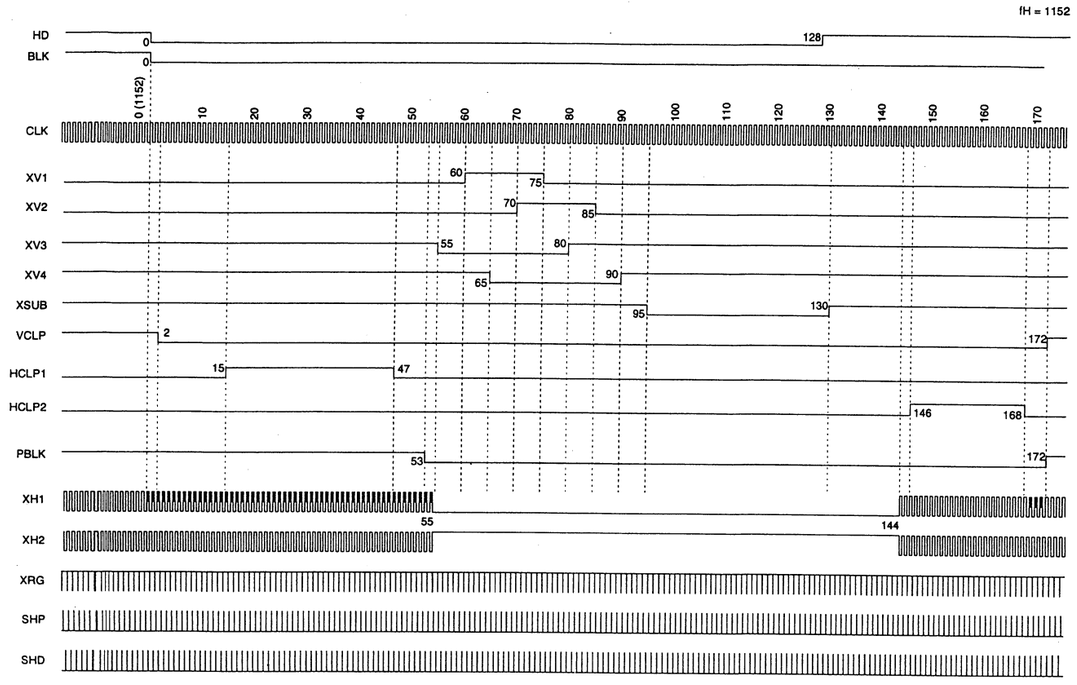

Timing Chart (6) CCIR horizontal direction, Composite digital mode

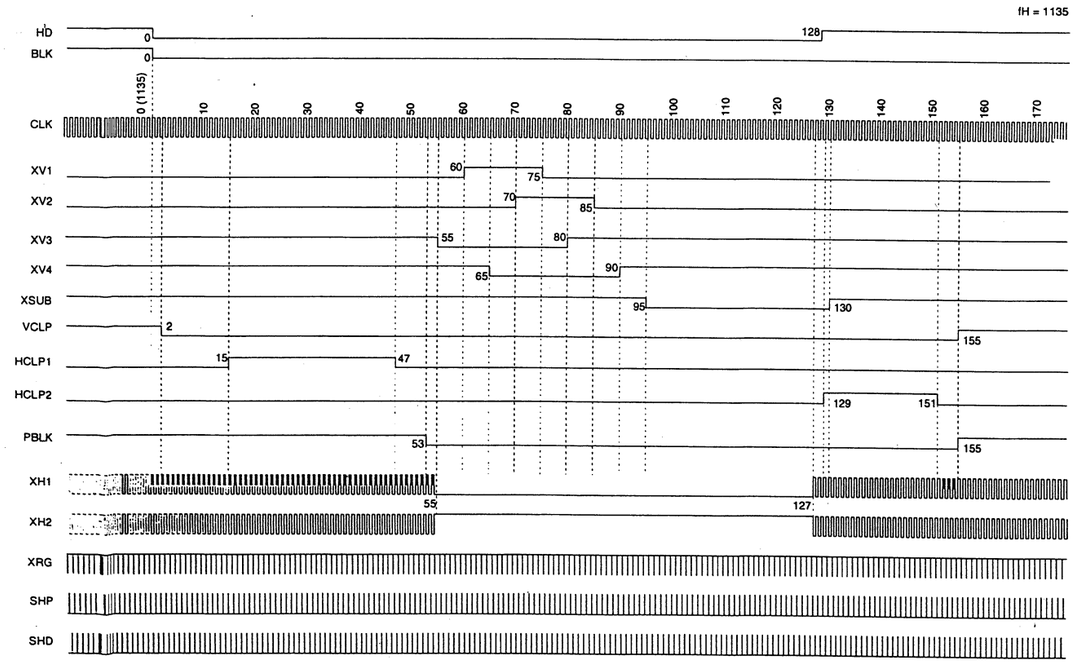

Timing Chart (7) Readout interval

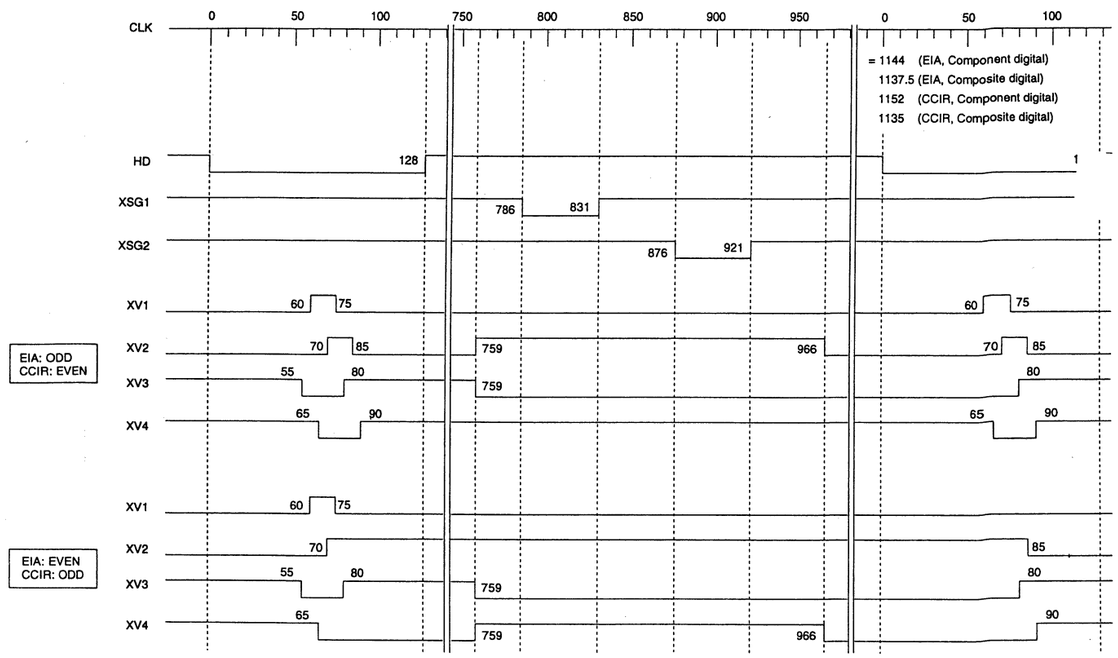

Timing Chart (8) High-speed pulse timing

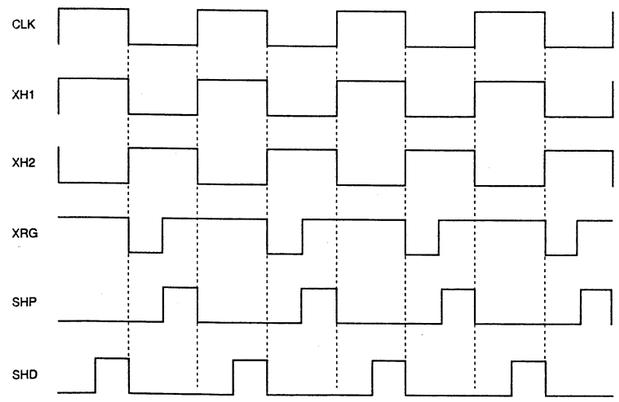

■ DS90LV031ATM-X [NATIONAL SEMICONDUCTOR]
(3V LVDS Quad CMOS Differential Line Driver)

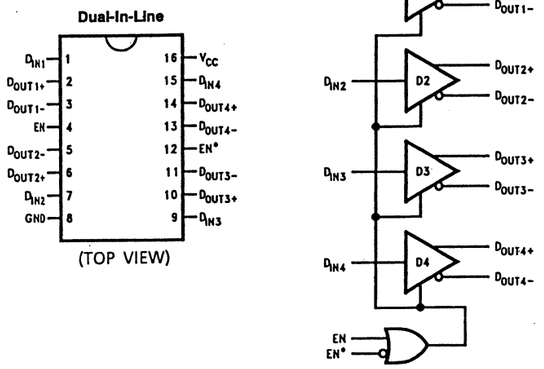

DRIVER

Enables		Input	Outputs	
EN	EN*	D_{IN}	D_{OUT+}	D_{OUT-}
L	H	X	Z	Z
All other combinations of ENABLE inputs		L	L	H
		H	H	L

■ DS90LV032ATM-X [NATIONAL SEMICONDUCTOR]
(3V LVDS Quad CMOS Differential Line Receiver)

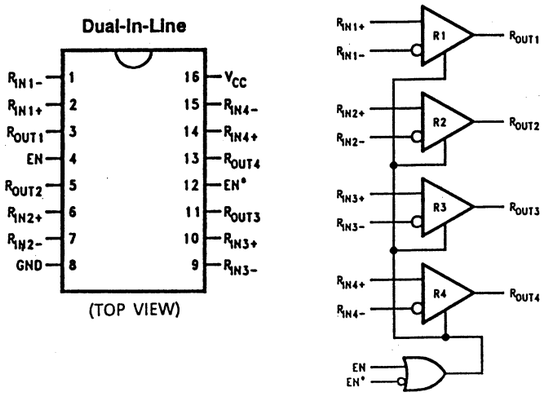

RECEIVER

ENABLES		INPUTS	OUTPUT
EN	EN*	$R_{IN+} - R_{IN-}$	R_{OUT}
L	H	X	Z
All other combinations of ENABLE inputs		$V_{ID} \geq 0.1V$	H
		$V_{ID} \leq -0.1V$	L
		Full Failsafe OPEN/SHORT or Terminated	H

■ JCL0028 [JVC]
(Shuffling Memory Control)

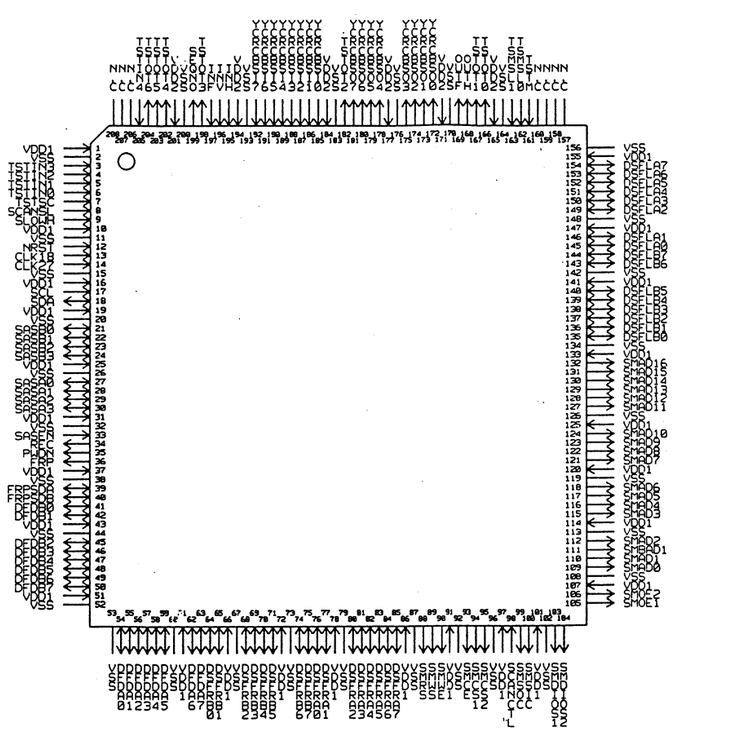

■ EPF6010ATC100-3 [ALTERA]
(Programmable Logic Device)

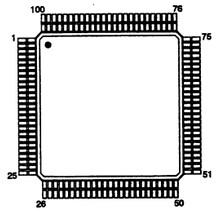

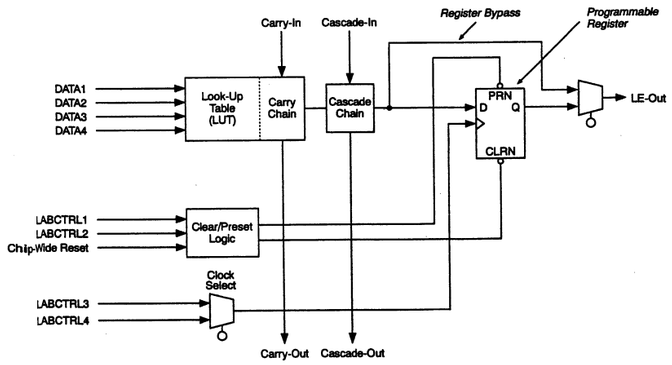

■ HM538254BTT-7 [HITACHI]
(256k Word Å~ 8 Bit CMOS Multiport RAM)

(Top View)

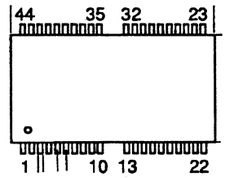

Pin Arrangement	Pin name			Pin Arrangement	Pin name		
	Supply voltage/ Clock	Input	Output		Supply voltage/ Clock	Input	Output
1	VCC			23	VSS		
2	SC			24		A3	
3			SI/O 0	25		A2	
4			SI/O 1	26		A1	
5			SI/O 2	27		A0	
6			SI/O 3	28			QSF
7	$\overline{DT/OE}$			29	$\overline{CAS}$		
8			I/O 0	30	NC		
9			I/O 1	31	DSF1		
10			I/O 2	32	VSS		
11	NL			33	NL		
12	NL			34	NL		
13			I/O 3	35			I/O 4
14	VSS			36			I/O 5
15	$\overline{WE}$			37			I/O 6
16	$\overline{RAS}$			38			I/O 7
17		A8		39	$\overline{SE}$		
18		A7		40			SI/O 4
19		A6		41			SI/O 5
20		A5		42			SI/O 6
21		A4		43			SI/O 7
22	VCC			44	VSS		

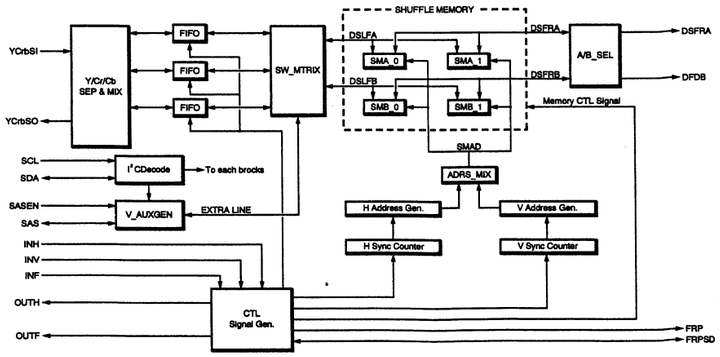

4-31

■ JCL0029 [JVC]
(Digital Channel Integrated Circuit (DCI) for Recoding)

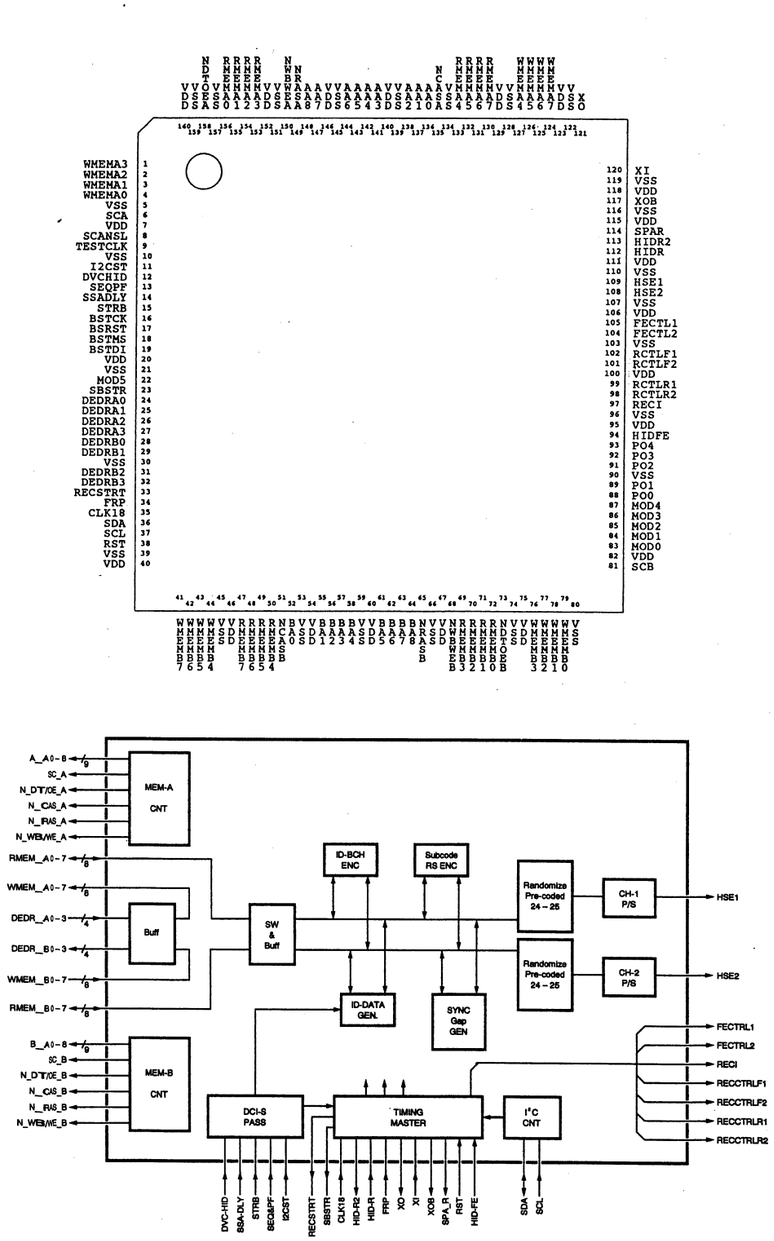

■ JCL0030 [JVC]
(Digital Channel Integrated Circuit (DCI) for Play back)

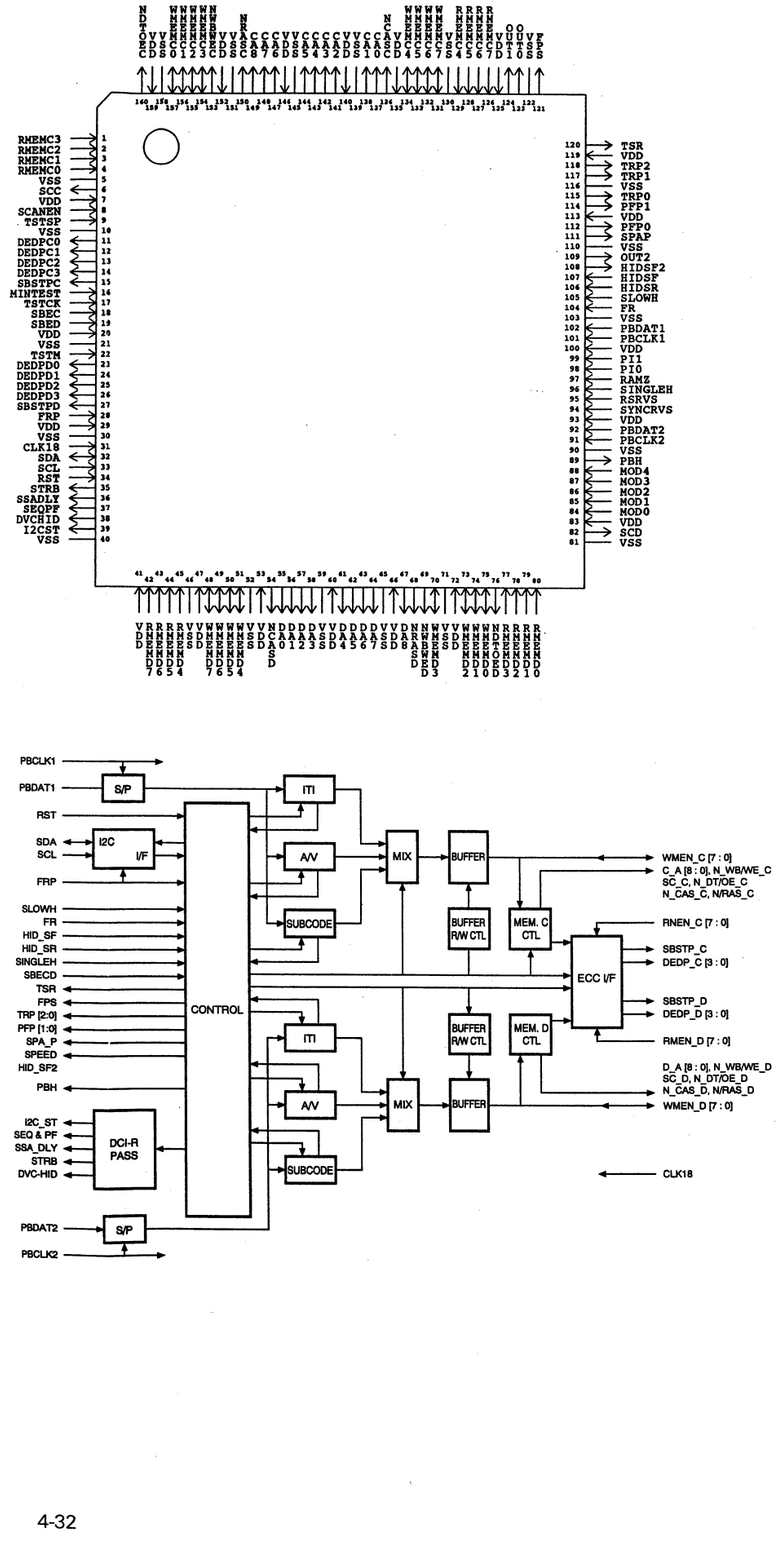

4-32

■ JCS0050 [JVC]
(Digital Signal Processor)

(Top View)

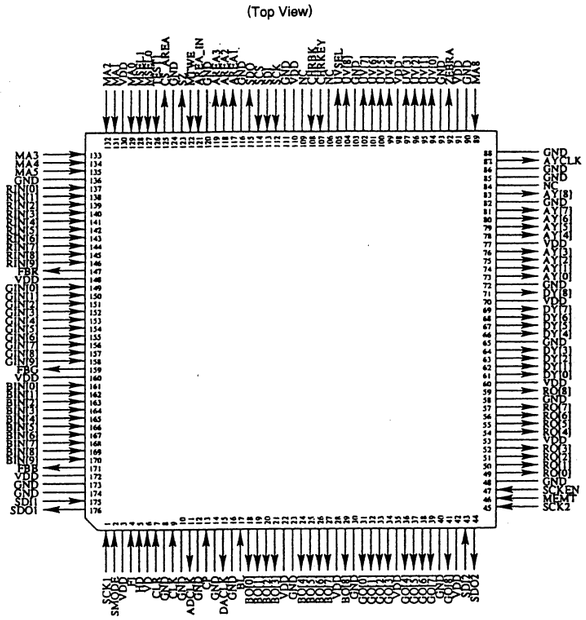

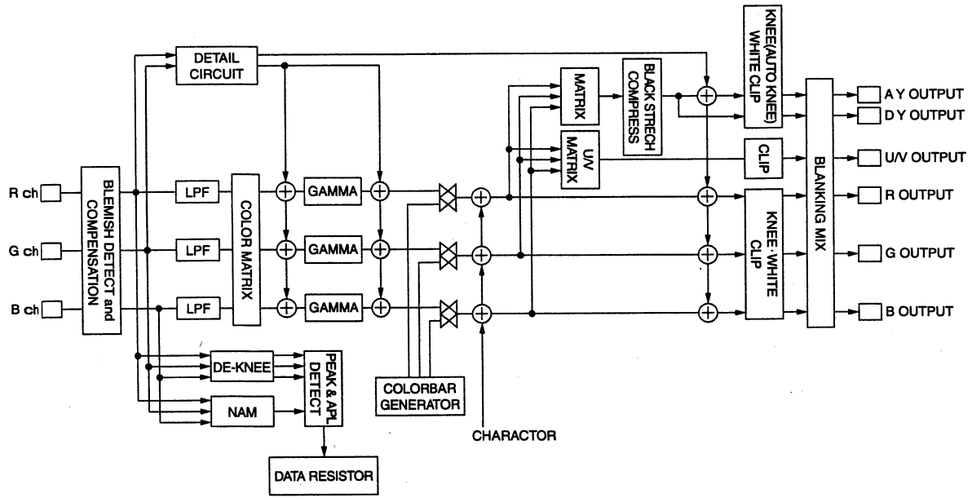

■ JCS0027 [JVC]
(SSG)

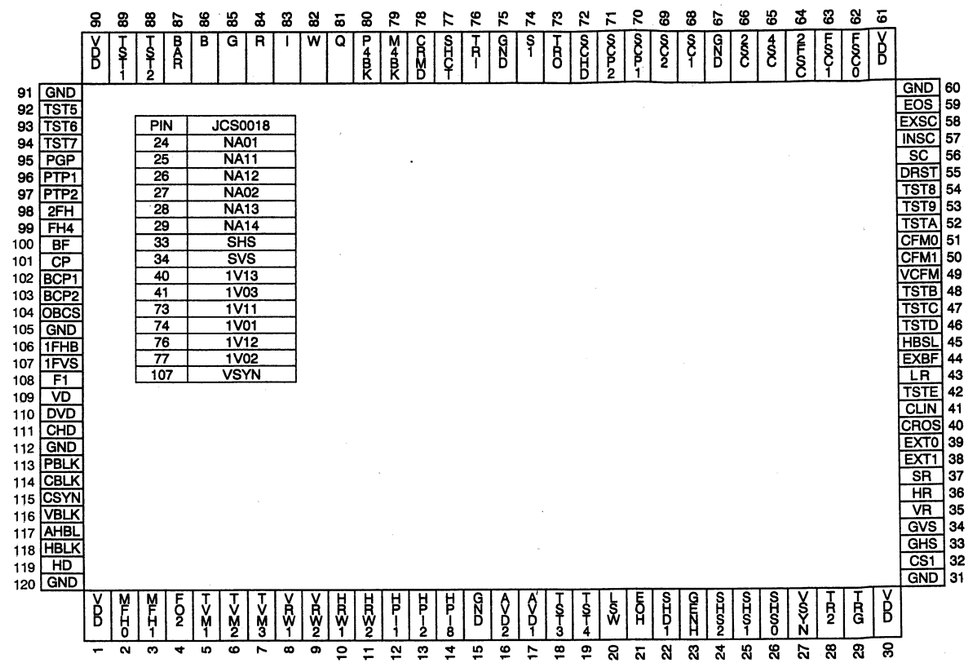

PIN	JCS0018
24	NA01
25	NA11
26	NA12
27	NA02
28	NA13
29	NA14
33	SHS
34	SVS
40	1V13
41	1V03
73	1V11
74	1V01
76	1V12
77	1V02
107	VSYN

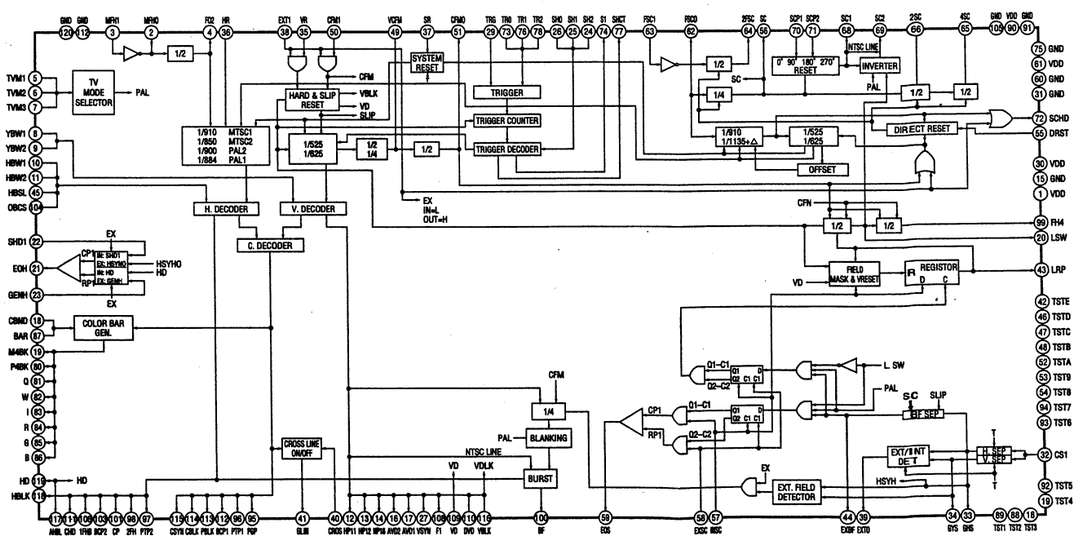

4-33

Terminal Specifications of JCS0027 (4th Revision)

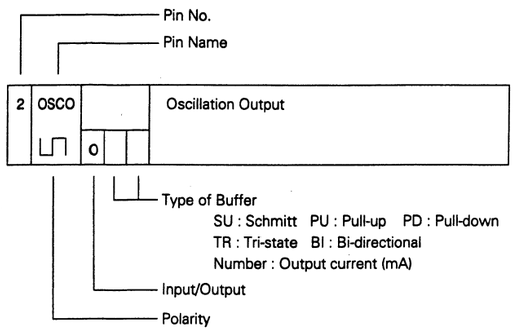

Pin No.	Pin Name	Function
1	VDD	+5 Power supply
2	MFH0	Synchronizing oscillation output Output terminal for built-in oscillator O
3	MFHI	Synchronizing oscillation input Input terminal for built-in oscillator I
4	F02	1/2 divided output 1/2 divided output of synchronizing oscillator O 9
5	TVM1	TV mode 1 I PU
6	TVM2	TV mode 2 I PU
7	TVM3	TV mode 3 I PU

	NTSC1 1820FH	NTSC2 1716FH	PAL2 1816FH	PAL1 1728FH	PALM 1716FH	SECAM 1716FH
TVM1	L	H	L	H	L	H
TVM2	L	L	H	H	L	L
TVM3	L	L	L	L	H	H

Pin No.	Pin Name	Function
8	VBW1	V. blanking control 1 I PU
9	VBW2	V. blanking control 2 I PU
10	HBW1	H. blanking control 1 I PU
11	HBW2	H. blanking control 2 I PU

	VBW1	VBW2	NTSC1	NTSC 2	PAL1	PAL2	PALM	SECAM
L	L	L	21H	21H	26H	26H	21H	26H
H	L	L	20H	20H	25H	25H	20H	25H
L	H	H	19H	19H	24H	24H	19H	24H
H	H	H	18H	18H	23H	23H	18H	23H

	HBW1	HBW2	NTSC1	NTSC2	PAL1	PAL2	PALM	SECAM
L	L	L	157T	143T	162T	170T	148T	162T
H	L	L	156T	147T	159T	167T	147T	159T
L	H	H	154T	146T	156T	164T	146T	156T
H	H	H	152T	152T	153T	161T	144T	153T

Pin No.	Pin Name	Function
12	HP11	H. pulse 11 H. pulse to be active at 11H, 13H, 15H and 17H. O 9
13	HP12	H. pulse 12 H. pulse to be active at 12H and 14H. O 9
14	HP18	H. pulse 18 H. pulse to be active at 18H. O 9
15	GND	Ground
16	AVD2	Pre-vertical drive pulse 2 Vertical drive pulse whose phase is 8H ahead of VD pulse. Functions as subcarrier blanking for SECAM system. O 9
17	AVD1	Pre-vertical drive pulse 1 Vertical drive pulse whose phase is 1H ahead of VD pulse. O 9
18	TST3	Test terminal 3 Set this terminal open in general. I PU
19	TST4	Test terminal 4 Set this terminal open in general. I PU
20	LSW	Line switch Half-divided FH output. Switches color difference signal of neighboring lines by 180° in phase for PAL system. O 9
21	EOH	H. synchronizing digital phase comparison output As compared with leading edge of SHDI; when internal HD has advanced phase: Low level, when internal HD has lagged phase: High level, when internal HD is in-phase: High impedance. O TR 13
22	SHDI	H. synchronizing digital phase comparison input (trailing detection) Input of horizontal drive signal originating from subcarrier. Active when EXTI is low level. When this is inactive, GHS (No. 33) is internally connected. I SH PU
23	GENH	H. synchronizing digital phase comparison input (trailing detection) Input for external synchronization, horizontal synchronization and phase adjustment. Active when EXTI is high level. When this is inactive, HD (No. 119) is internally connected. I SH PU

Pin No.	Pin Name	Function
24	SHS2	Shutter speed setting 2 Random shutter setting function (Refer to the specifications.) I PU
25	SHS1	Shutter speed setting 1 Random shutter setting function (Refer to the specifications.) I PU
26	SHS0	Shutter speed setting 0 Random shutter setting function (Refer to the specifications.) I PU
27	VSYN	V. sync. output Vertical synchronizing signal of V. EQ pulse width. O 9
28	TR2	Sync. reset mode setting For sync. reset mode setting when random shutter setting functions is activated. I PU
29	TRG	Trigger input Trigger input to activate random shutter setting function. (Refer to the random shutter specifications.) I PU
30	VDD	+5V power supply
31	GND	Ground
32	CSI	Ext. composite sync. signal input To input external composite synchronizing signal for horizontal and vertical separation and ext. sync. signal input detection. I SH PU
33	GHS	Horizontal separate sync. Horizontal separate signal of external composite synchronizing signal. 1/2 equivalent pulse is not included. O 9
34	GVS	Vertical separate sync. Vertical separate signal of external composite synchronizing signal. 1/2 equivalent pulse is not included. O 9

SHS2	SHS1	SHS0	Shutter speed NTSC	Shutter speed PAL
L	L	L	1/60	1/50
L	L	H	1/100	1/120
L	H	L	1/250	
L	H	H	1/500	
H	L	L	1/1000	
H	L	H	1/2000	
H	H	L	1/4000	
H	H	H	1/10000	

Pin No.	Pin Name	Function
35	VR	Vertical reset External synchronizing input by slip system. If this system is input in vertical sync. period, hard reset is activated. Input in other period stops internal counter for a period of pulse width. I PU
36	HR	Horizontal reset Presets horizontal component 1T before rise of HD. Jitters in a period shorter than 140 ns are absorbed. However, operation is not secured for continuous input. I PU
37	SR	System reset Inside of IC is forcibly initialized regardless of internal or external synchronization. VR and HR inputs are ineffective. Jitters in a period shorter than 140 ns are absorbed. I PU
38	EXTI	Internal/External synchronization setting input L : Internal synchronization H : External synchronization I PD
39	EXTO	Internal/External synchronization setting output L: Without CSI input After detection of no SHS, another SHS is not detected for a period of 8 fields. H: With CSI input After detection of SHS, 200 or more SHS's are detected in 1 vertical period. O 9
40	CROS	Cross ON/OFF input L: To stop cross output H: To activate cross output operation For detail, refer to supplementary specifications of respective terminals. I PD
41	CLIN	Cross output To output a cross in the center of screen. For detail, refer to supplementary specifications of respective terminals. O 9
42	TSTE	Test terminal E Set this terminal open in general. I PU
43	LR	Line reset When EXTI is external synchronization (High level), setting signal is supplied to LSW. When internal burst is ahead of external burst in phase, High level is output. When internal burst is behind external burst in phase, Low level is output (for 6 clocks of SC). Phase comparison is not operated for one field after output. For detail, refer to supplementary specifications of respective terminals. O 9

Pin No.	Pin Name	Function
44	EXBF	Brust flag separate output With detection of one or more H. sync pulse from CSI input, pulse whose width is for 6 cycles of subcarrier is output. For details, refer to supplementary specifications of respective terminals. O 9
45	HBSL	H. blanking reset To switch output position of IFHB (106). L: System delay 900 ns approx. H: System delay 450 ns approx. I PU
46	TSTD	Test terminal D Set this terminal open in general. BI PU 9
47	TSTC	Test terminal C Set this terminal open in general. BI PU 9
48	TSTB	Test terminal B Set this terminal open in general. I PU
49	VCFM	VTR color frame Color frame for VTR exclusively. 2-field period for NTSC1, NTSC2 and PAL. 4-field period for PAL1, PAL2 and SECAM. O 9
50	CFMI	Color frame input Effective with EXTI being low level. Used for color frame control in external synchronization. Reset to synchronizing circuit by the slip system. I SH PU
51	CFMO	Color frame output Pulse output at the beginning of every color frame. 4-field period for NTSC1 and NTSC2. 8-field period for PAL1, PAL2, PALM and SECAM. O 9
52	TSTA	Test terminal A Set this terminal open in general. I PU
53	TST9	Test terminal 9 Set this terminal open in general. I PU

Pin No.	Pin Name	Function
54	TST8	Test terminal 8 Set this terminal open in general. I PU
55	DRST	Direct reset terminal When EXTI is low level, the following operations are realized. To switch reset operation of horizontal counter for subcarrier. To reset color frame synchronizing with horizontal counter with High level; To reset color frame with Low level. I PU
56	SC	Subcarrier output To monitor subcarrier signal connected internally with digital phase comparator. When phase of SC1 (68) is 0°, this output is inphase. O 9
57	INSC	Internal subcarrier input Shall be connected with SC (56). Effective when EXBF is low level. Pulse rise is detected. I
58	EXSC	External subcarrier input Effective when EXBF is low level. Pulse rise is detected. I
59	EOS	Digital phase comparison output for subcarrier As compared with leading edge of EXSC; when internal SC has advanced phase : Low level, when internal SC has lagged phase : High level, when internal SC is in phase : High impedance. O TR 13
60	GND	Ground
61	VDD	+5V power supply
62	FSCO	Oscillator output for subcarrier O
63	FSCI	Oscillator input for subcarrier I
64	2FSC	Double subcarrier output Half-divided oscillator output for subcarrier O 13

Pin No.	Pin Name	Function
65	4SC	1/4 subcarrier output 1/4-divided output of subcarrier frequency O 9
66	2SC	1/2 subcarrier output 1/2-divided output of subcarrier frequency O 9
67	GND	Ground
68	SC1	Subcarrier 1 Subcarrier frequency output. Phase is changed by SCP1 and SCP2. In PAL mode, phase is not changed every H. O 9
69	SC2	Subcarrier 2 Subcarrier frequency output whose phase is 90° ahead of SC1. Phase is changed by SCP1 and SCP2. In PAL mode, phase is inverted by 180° every H. O 9
70	SCP1	Subcarrier select 1 Note: SC2 is expressed based on SC1. I PD
71	SCP1	Subcarrier select 2 I PD
72	SCHD	Subcarrier horizontal driver Horizontal drive pulse originating from subcarrier frequency. O 13
73	TR0	Random shutter control system setting input To set random shutter control system. L: 8-stage default control, H: Pulse width continuous control (Refer to the specifications of random shutter setting function.) I PD
74	SI	Stroboscope index output In normal operation, this output is for stroboscopic lamp emitting time. In random shutter operation, this output is for video output time. (Refer to the specifications of random shutter setting function.) O 9

SCP2	SCP1	SC1	SC2
L	L	0°	90° ahead (270°)
L	H	90°	90° ahead (0°)
H	L	180°	90° ahead (90°)
H	H	270°	90° ahead (180°)

Pin No.	Pin Name	Function
75	GND	Ground
76	TR1	Random reset system setting input To determine reset system setting system. L: SYNC reset system, H: SYNC non-reset system. (Refer to the specifications of random shutter setting function.) I PD
77	SHCT	Shutter control output Electronic shutter control signal. Shall be connected to SHCT (19) of TG (μPD9438GK). (Refer to the specifications of random shutter setting function.) O 9
78	CBMD	SMPTE/FULL To switch color bar signal to SMPTE or FULL. L: Full Field mode H: SMPTE mode Effective only with BAR signal of low level. I PU
79	M4BK	Color bar signal o 9
80	P4BK	Color bar signal o 9
81	Q	Color bar signal o 9
82	W	Color bar signal o 9
83	I	Color bar signal o 9

	BAR	CBMD	I	W
NTSC1 NTSC2	H L L	X H L	L Effective L	L Effective (75%W) L
PAL1 PAL2	H L L	X H L	L Effective L	L Effective (75%W) Effective (100W)
PALM	H L L	X H L	L Effective L	L Effective (75%W) Effective (100W)
SECAM	H L L	X H L	L Effective L	L Effective (75%W) L

	Q	P4BK	M4BK
NTSC1 NTSC2	L Effective L	L Effective L	L Effective L
PAL1 PAL2	L Effective L	L Effective L	L Effective L
PALM	L Effective L	L Effective L	L Effective L
SECAM	L Effective L	L Effective L	L Effective L

Pin No.	Pin Name	Function
84	R	Color bar signal 0 9
85	G	Color bar signal 0 9
86	B	Color bar signal 0 9

	BAR	C3MD	B	G	R
NTSC1 NTSC2	H L	X X	L Effective	L Effective	L Effective
PAL1 PAL2	H L	X X	L Effective	L Effective	L Effective
PALM	H L	X X	L Effective	L Effective	L Effective
SECAM	H L	X X	L Effective	L Effective	L Effective

Pin No.	Pin Name	Function
87	BAR	Color bar control (ON/OFF) I PU

BAR	R, G, B, I, Q, W, P4BK, M4BK
L	Effective
H	Fixed at Low level

Pin No.	Pin Name	Function
88	TST2	Test terminal 2 Set this terminal open in general. I PU
89	TST1	Test terminal 1 Set this terminal open in general. I PU
90	VDD	+5V power supply
91	GND	Ground
92	TST5	Test terminal 5 Set this terminal open in general. I PU
93	TST6	Test terminal 6 Set this terminal open in general. I PU
94	TST7	Test terminal 7 Set this terminal open in general. O 9
95	PGP	Pilot gate pulse Uniform voltage level of two signals, one passes the 1FH delay line and the other does not pass the 1H line, with each other in order to compensate attenuation caused by the delay line. O 9
96	PTP1	Pilot pulse 1 Uniform voltage level of two signals, one passes the 1H delay line and the other does not pass the 1H line, with each other in order to compensate attenuation caused by the delay line. O 9
97	PTP2	Pilot pulse 2 Used to control video level. O 9
98	2FH	Double FH O 9

NTSC1	NTSC2	PAL1	PAL2	PALM	SECAM
31.468	31.468	31.25	31.25	31,468	31.25

Pin No.	Pin Name	Function
99	FH4	1/4FH Half-divided output of LSW. Equivalent to 25 Hz in PAL mode. O 9
100	BF	Burst flag Regulates period to insert subcarrier into back porch of horizontal sync. signal. Functions to switch chromaticity signal for every line in SECAM mode. O 9
101	CP	Clamp pulse Signal to clamp reference voltage of black level. O 9
102	BCP1	Black clamp pulse 1 Fixes black level of CCD output signal. O 9
103	BCP2	Black clamp pulse 2 Fixes black level of CCD output signal (at every H output). O 9
104	OBCS	Optical black pulse select Switching of output position of horizontal BCP1 and BCP2. L: Frontward output H: Backward output I PU

Pin No.	Pin Name	Function
105	GND	Ground
106	IFHB	Interface horizontal blanking Output pulse that is narrower than HBLK both in leading edge and trailing edge. O 9
107	IFVS	Interface vertical synchronization Normal function: To output vertical synchronization signal having the same pulse width of V. EQ pulse. Random shutter setting function: To output the same signal as V. sync. signal in the fall time. O 9
108	FI	Field index Field discrimination signal. L: Field that HD and VD fall at the same time. H: Field that there is a time lag of 0.5H in falling between HD and VD. O 9
109	VD	Vertical drive pulse Pulse output at the beginning of every field. Used as the vertical timing standard for the set. O 9
110	DVD	Delayed vertical drive pulse Vertical drive signal that lags behind VD pulse. Controls camera's scanning timing and regulates activation time of sawtooth waveform of vertical deflection circuit. O 9
111	CHD	Delayed horizontal drive pulse Controls camera's scanning timing. Regulates activation time of sawtooth waveform of horizontal deflection circuit. O 9
112	GND	Ground
113	PBLK	Pre-blanking Composite blanking signal used for video processing. As compared with CBLK signal, this signal is narrower in the leading edge. O 9
114	CBLK	Composite blanking Horizontal and vertical composite blanking signal. O 9
115	CSYN	Composite sync. Composite synchronizing signal comprising of four signals of HSYN, VSYN, EQ and SAW. O 9
116	VBLK	V. blanking Vertical blanking signal whose pulse width can be changed with VBW1 and VBW2. O 9
117	AHBL	Pre-horizontal blanking Pulse that HBLK is advanced in breaking of leading edge. O 9
118	HBLK	H. blanking Horizontal blanking pulse whose pulse width can be changed with HBW1 and HBW2. O 9
119	HD	H. drive Pulse synchronized with beginning of respective lines. Used as horizontal timing standard of the set. O 13
120	GND	Ground

■ L7A1433 [LSI LOGIC] (Error Correcting Codes (ECC))

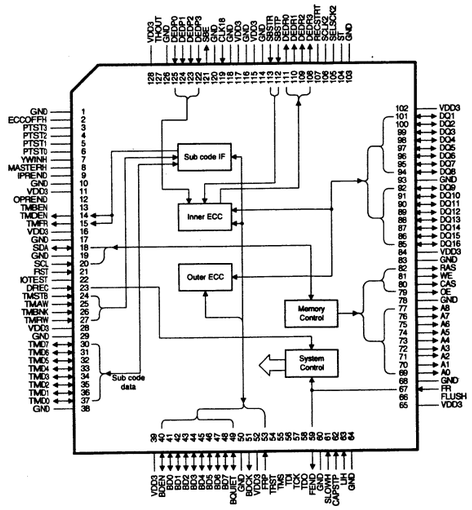

Pin No.	Label	In/Out	Description
1	GND	–	Ground
2	ECCOFFH	–	Not used (Low fixed)
3	PTST3	–	Not used (Low fixed)
4	PTST2	–	Not used (Low fixed)
5	PTST1	–	Not used (Low fixed)
6	PTST0	–	Not used (Low fixed)
7	TWINH	–	Not used (Low fixed)
8	MASTERH	–	Not used (Low fixed)
9	IPREND	–	Not used (Low fixed)
10	GND	–	Ground
11	VDD3	–	Power supply (+3V)
12	OPREND	–	Not used
13	TMBEN	–	Not used
14	TMDEN	Out	Communication enable of sub code bus
15	TMFR	Out	Frame detect (1st track: H)
16	VDD3	–	Power supply (+3V)
17	GND	–	Ground
18	SDA	In/Out	Data for IIC
19	GND	–	Ground
20	SCL	In	Clock for IIC
21	RST	In	System reset
22	IOTEST	–	Not used (High fixed)
23	DREC	In	Signal REC: H
24	TMSTB	In	Data strobe of sub code bus
25	TMAW	In	Address strobe of sub code bus
26	TMBNK	In	Bank select
27	TMRW	In	Read/Write of sub code bus (Write: H)
28	VDD3	–	Power supply (+3V)
29	GND	–	Ground
30	TMDT7	In/Out	Adderss and data of sub code bus
31	TMDT6	In/Out	
32	TMDT5	In/Out	
33	TMDT4	In/Out	
34	TMDT3	In/Out	
35	TMDT2	In/Out	
36	TMDT1	In/Out	
37	TMDT0	In/Out	
38	GND	–	Ground
39	VDD3	–	Power supply (+3V)
40	BDEN	In/Out	DV bus data enable
41	BD0	In/Out	DV bus data (9 MHz/8 bit)
42	BD1	In/Out	
43	BD2	In/Out	
44	BD3	In/Out	
45	BD4	In/Out	
46	BD5	In/Out	
47	BD6	In/Out	
48	BD7	In/Out	
49	BQUIET	In/Out	DV bus busy
50	GND	–	Ground
51	BDCK	Out	DV bus data clock (9 MHz)
52	VDD3	–	Power supply (+3V)
53	FRP	In	Frame pulse
54	TRST	–	–
55	TMS	–	–
56	TDI	–	–
57	TCK	–	–
58	TDO	–	–
59	FEND	Out	Frame end pulse for slow and still
60	GND	–	Ground
61	SLOWH	In	Slow mode flag (Slow mode: H)
62	CAPSTP	In	Capstan stop flag (Capstan stop mode: H)
63	LIH	In	Interval slow or linear slow flag (Linear slow mode: H)
64	GND	–	Ground
65	VDD3	–	Power supply (+3V)
66	FLUSH	–	Data transition pulse for field advance (Not used)
67	FR	In	Capstan foward/reverse (REV: H)
68	GND	–	Ground
69	A0	Out	(A0: LSB)
70	A1	Out	
71	A2	Out	
72	A3	Out	
73	A4	Out	Memory address (9 MHz)
74	A5	Out	
75	A6	Out	
76	A7	Out	
77	A8	Out	(A8: MSB)
78	GND	–	Ground
79	OE	Out	Memory output enable (active: L)
80	CAS	Out	Memory column address strobe
81	WE	Out	Memory write enable (active: L)
82	RAS	Out	Memory row address strobe
83	GND	–	Ground
84	VDD3	–	Power supply (+3V)
85	DQ16	In/Out	(DQ16: MSB)
86	DQ15	In/Out	Memory data (16 bit)
87	DQ14	In/Out	
88	DQ13	In/Out	
89	DQ12	In/Out	
90	DQ11	In/Out	Memory data (16 bit)
91	DQ10	In/Out	
92	DQ9	In/Out	
93	GND	–	Ground
94	DQ8	In/Out	
95	DQ7	In/Out	
96	DQ6	In/Out	Memory data (16 bit)
97	DQ5	In/Out	
98	DQ4	In/Out	
99	DQ3	In/Out	
100	DQ2	In/Out	
101	DQ1	In/Out	(DQ1: LSB)
102	VDD3	–	Power supply (+3V)
103	GND	–	Ground
104	ST	–	Not used (Low fixed)
105	SELSCK2	–	Not used (Low fixed)
106	SCLK2	–	Not used (Low fixed)
107	RECSTRT	In	REC track start pulse
108	DEDR3	Out	(DEDR3: MSB)
109	DEDR2	Out	REC data to DCI (9 MHz/4 bit)
110	DEDR1	Out	
111	DEDR0	Out	(DEDR0: LSB)
112	SBSTP	In	Sync. block start pulse (PB)
113	SBSTR	In	Sync. block start pulse (REC)
114	GND	–	Ground
115	VDD3	–	Power supply (+3V)
116	GND	–	Ground
117	VDD3	–	Power supply (+3V)
118	GND	–	Ground
119	CLK18	In	System clock input (18 MHz) from CLK OSC IC (IC401)
120	GND	–	Ground
121	SBE	Out	Sync block error
122	DEDP3	In	(DEDP3: MSB)
123	DEDP2	In	PB data from DCI (9MHz/4 bit)
124	DEDP1	In	
125	DEDP0	In	(DEDP0: LSB)
126	GND	–	Ground
127	THOUT	–	Not used
128	VDD3	–	Power supply (+3V)

■ LM1881M-X [National Semiconductor] (Video Sync Separator)

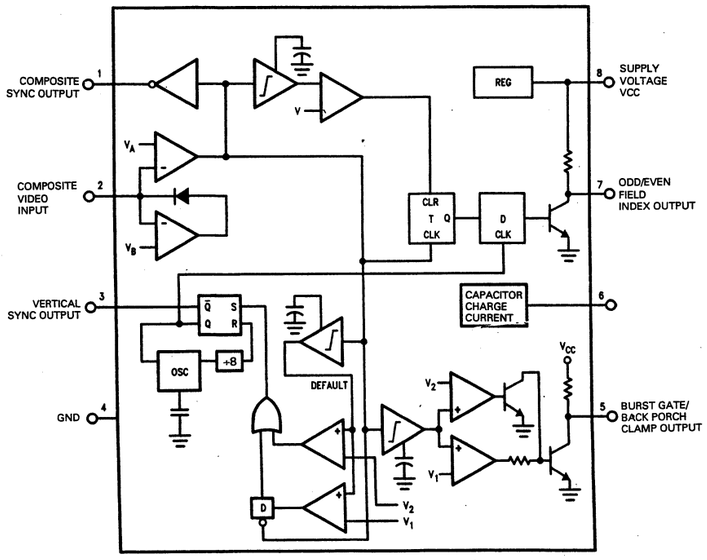

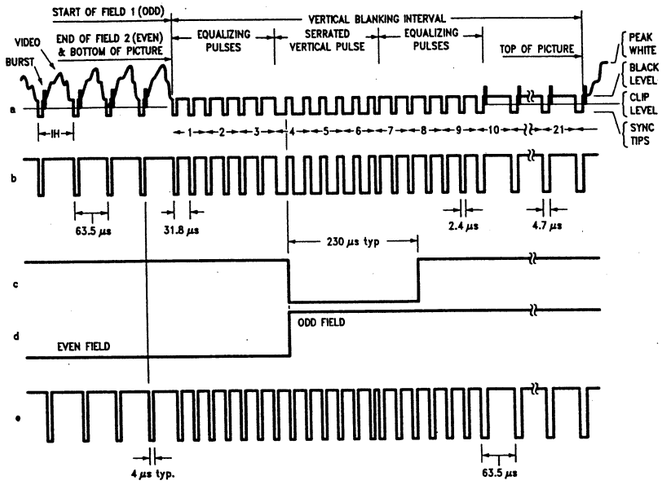

(a) Composite Video; (b) Composite Sync; (c) Vertical Output Pulse; (d) Odd/Even Field Index; (e) Burst Gate/Back Porch Clamp

■ LMC6082IM-X [National Semiconductor] (Precision CMOS Dual Op.Amp.)

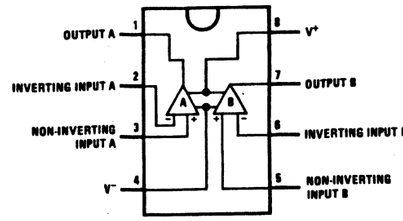

Top View

■ LP2986IMM-X [NATIONAL SEMICONDUCTOR] (Adjustable Voltage Regulator)

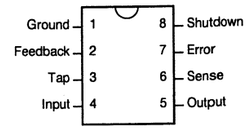

Top View

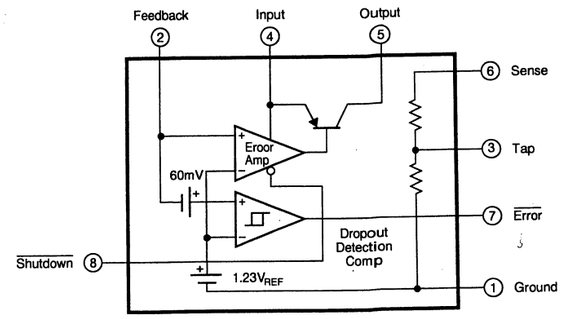

4-37

■ M52660FP [MITSUBISHI]
(3 Channel VCO)

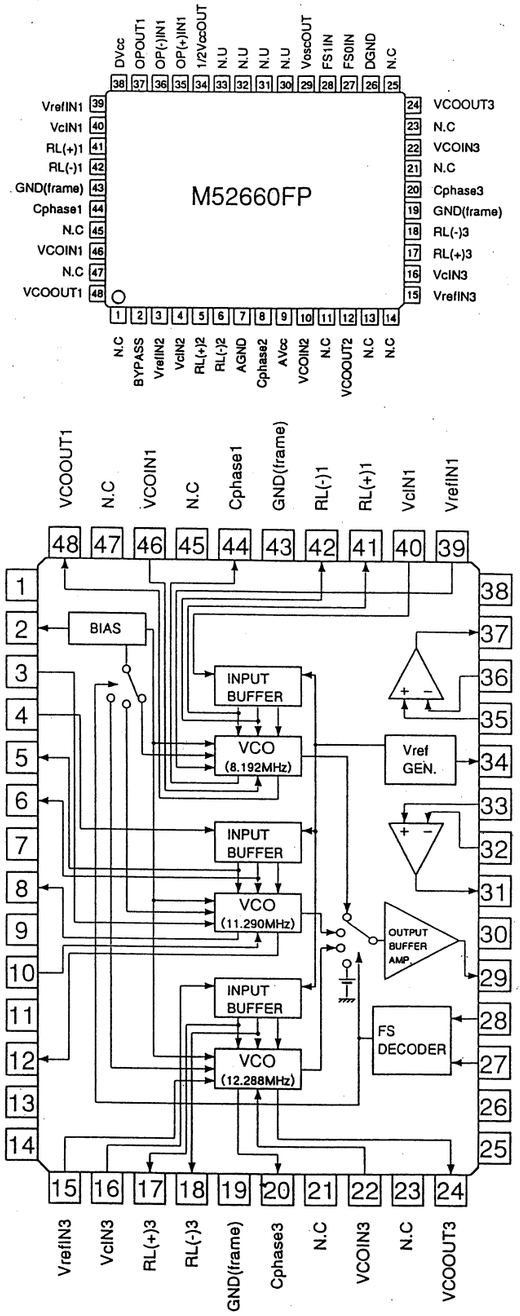

■ M62352GP-W [MITSUBISHI]
(8 bit 12Channel D/A Converter with Buffer Op.Amp.)

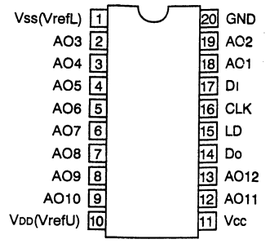

Top View

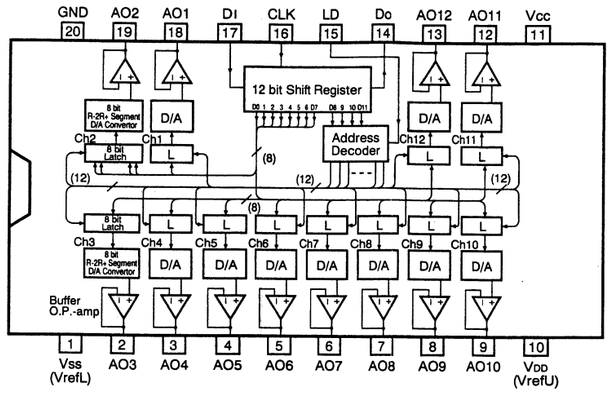

■ MB88345PF [FUJITSU]
(D/A Converter)

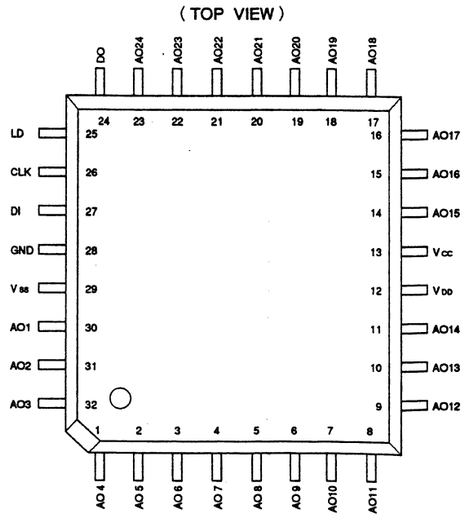

■ M62353GP-X [MITSUBISHI]
(8-Bit 8-Channel D/A Converter)

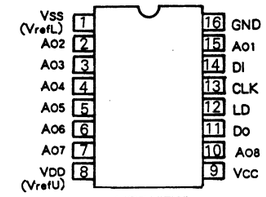

(TOP VIEW)

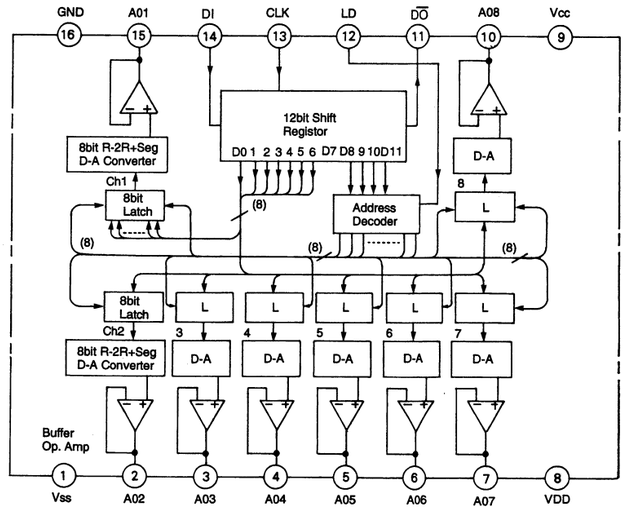

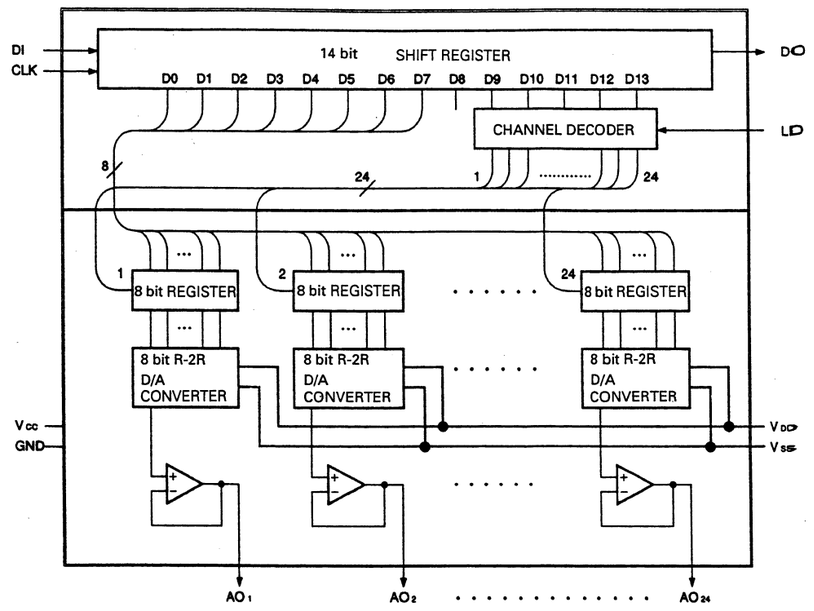

4-38

■ PLSC1292 [FUJITSU]
(2M Bit Flash Memory)

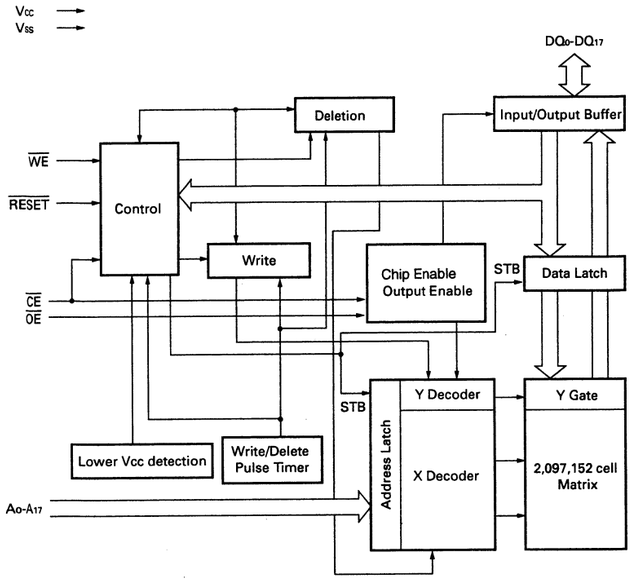

■ PLSC1293 [FUJITSU]
(Refer to PLSC1292.)

■ MC74HC367F-X [MOTOROLA]
(Hex Bus Drivers With 3-State NON-Inverted Output)

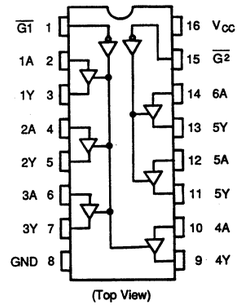

(Top View)

TRUE Table

INPUTS		OUTPUTS	
$\overline{G}$	An	Y(367A)	$\overline{Y}$(368A)
L	L	L	H
L	H	H	L
H	X	Z	Z

X:DON'T CARE Z:HIGH IMPEDANCE

■ MC74HC4046AF-X [MOTOROLA]
(CMOS Phase Lock Loop)

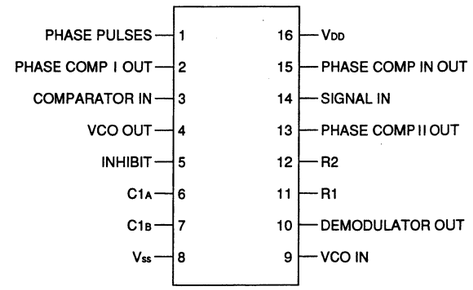

Top View

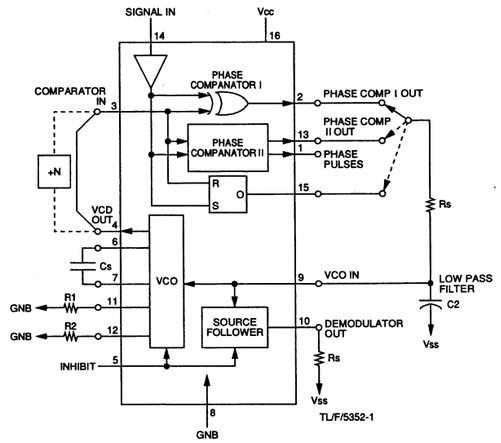

■ MN12821-QR-X [MATSUSHITA]
(Voltage Detecter)

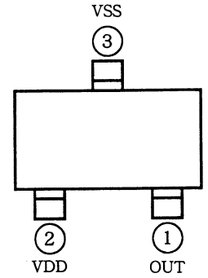

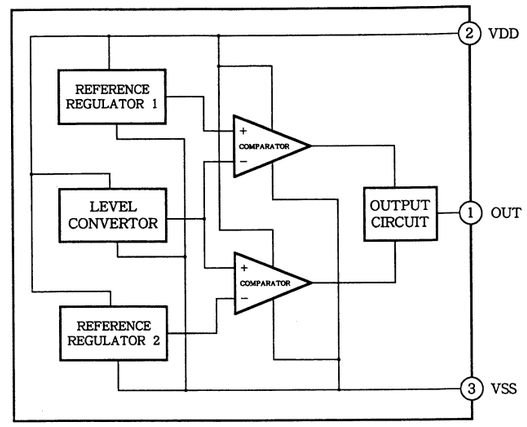

■ MN47V77S-XE [MATSUSHITA]
(256K-word x 8-bit FIFO Memory)

Top View

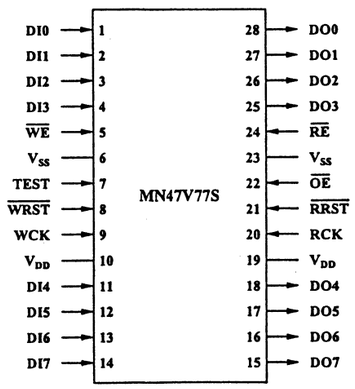

Pin Name

Symbol	Pin Name	Symbol	Pin Name
WCK	Write Clock	$\overline{OE}$	Output Enable
RCK	Read Clock	DI0-7	Data Input
$\overline{WRST}$	Write Reset	DO0-7	Data Output
$\overline{RRST}$	Read Reset	VDD	Power Supply (+3.3V)
$\overline{WE}$	Write Enable	VSS	Power Supply (0V)
$\overline{RE}$	Read Enable	TEST	Test terminal

Block Diagram

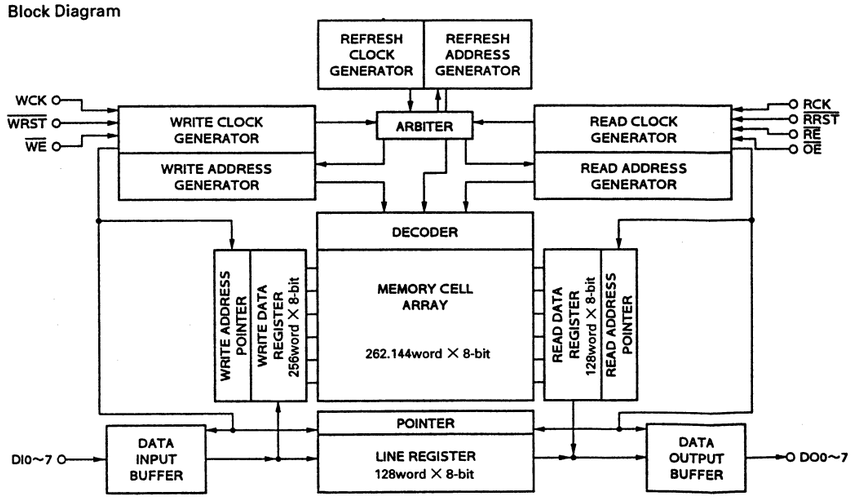

4-39

■ MN657021F [MATSUSHITA]
(8 Bit 3ch D/A Converter)

(Top View)

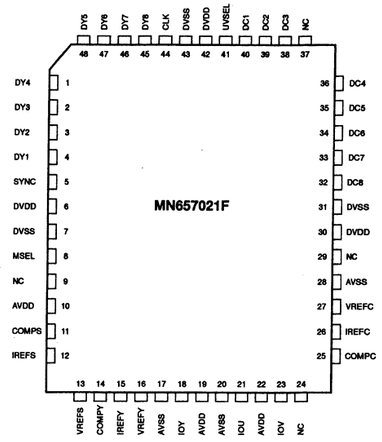

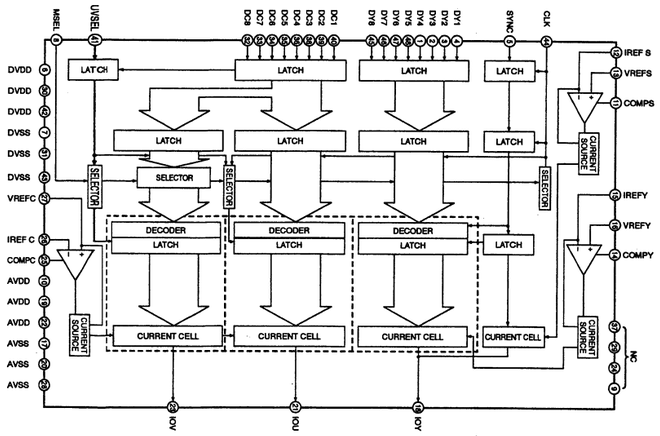

■ NJM4556AM-X [JRC]
(Dual High Current Op.Amp.)

(Top View)

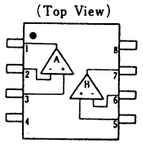

1. A OUTPUT
2. A−INPUT
3. A+INPUT
4. V⁻
5. B+INPUT
6. B−INPUT
7. B OUTPUT
8. V⁺

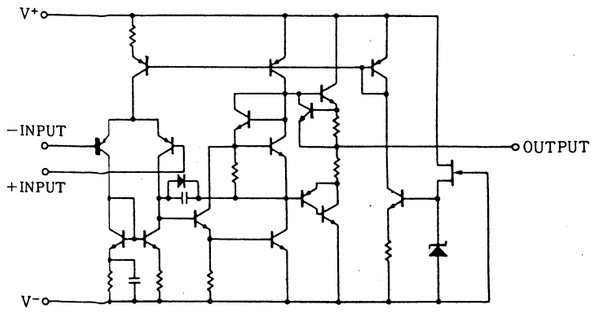

■ MN673711 [MATSUSHITA]
(Video Compression/Decompression LSI)

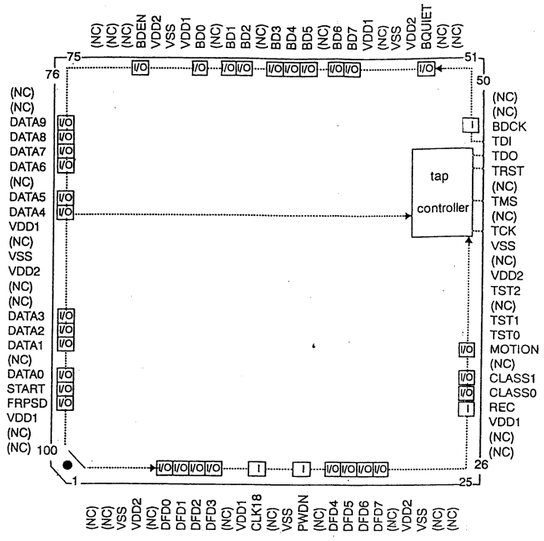

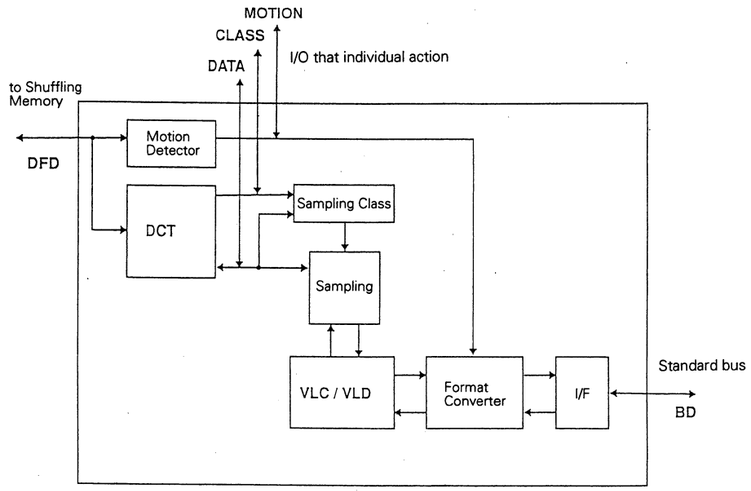

■ NJM062M-X [JRC]
(J-FET Input Op.Amp.)

(Top View)

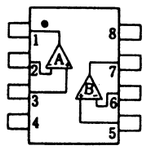

1. A OUTPUT
2. A−INPUT
3. A+INPUT
4. V⁻
5. B+INPUT
6. B−INPUT
7. B OUTPUT
8. V⁺

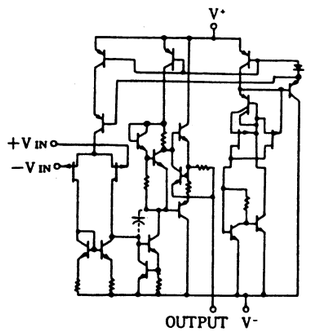

■ NJM1496V-X [JRC]
(Balanced Modulator)

(Top View)

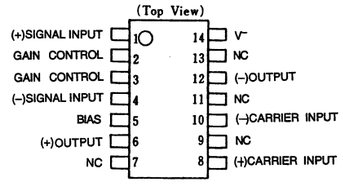

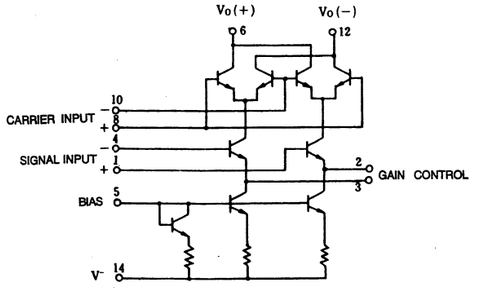

■ NJM2068M-D-X [JRC]
(Dual Low-Noise Op.Amp.)

(Top View)

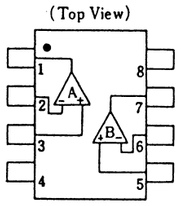

1. A OUTPUT
2. A−INPUT
3. A+INPUT
4. V⁻
5. B+INPUT
6. B−INPUT
7. B OUTPUT
8. V⁺

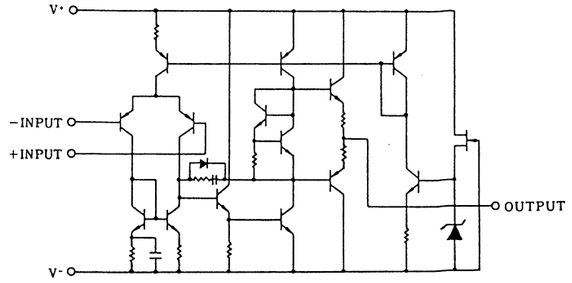

4-40

■ NJM78L20UA-X [JRC]
(3-Terminal Positive Voltage Regulator (+20V))

1. OUT
2. GND
3. IN

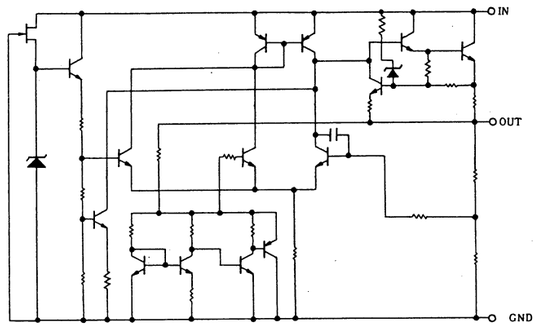

■ NM93C86AEM8-X [NATIONAL SEMICONDUCTOR]
(16,384-Bit Serial Interface, Standard Voltage CMOS EEPROM)

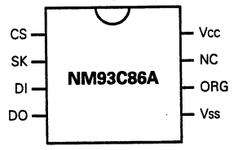

Top View

Pin Nane

Pin	Description
CS	Chip Select
SK	Serial Data Clock
DI	Serial Data Input
DO	Serial Data Output
VSS	Ground
ORG	Memory Organization Select (On the NM93C86A)
NC	No Connect
VCC	Positive Power Supply

Block Diagram

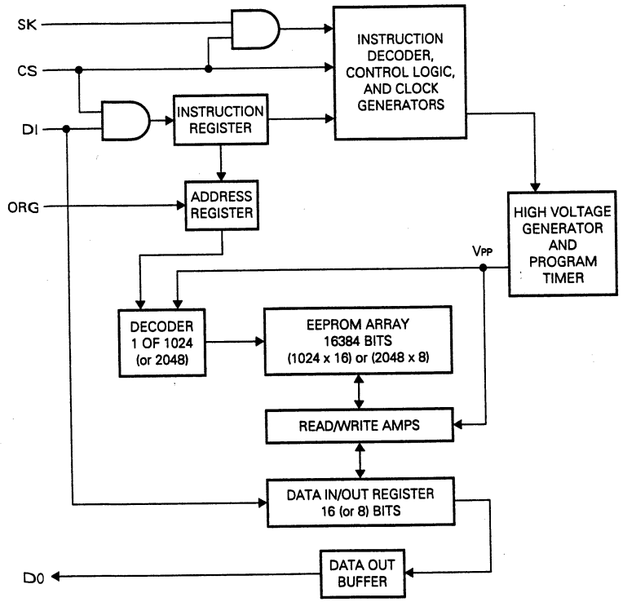

■ OPA655U-XE [BBJ]
(Op.Amplifier)

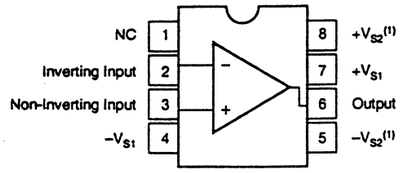

(Top View)

■ P16V8Z-25-01 [ADVANCED MICRO DEVICES]
(Programmable Array Logic)

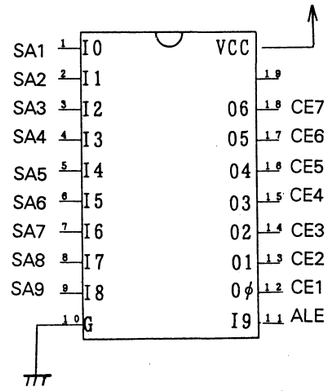

■ PCM1710U/G/-XE [BAR BRAWN]
(D/A Converter)

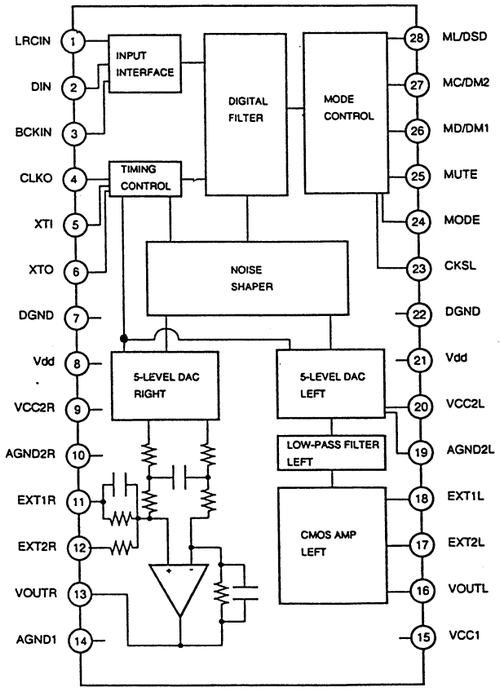

■ S-81224SGUP-X [SEIKO]
(Voltage Regulator(2.4V))

Top view

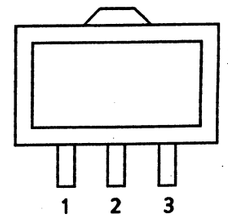

1 GND
2 V_{IN}
3 V_{OUT}

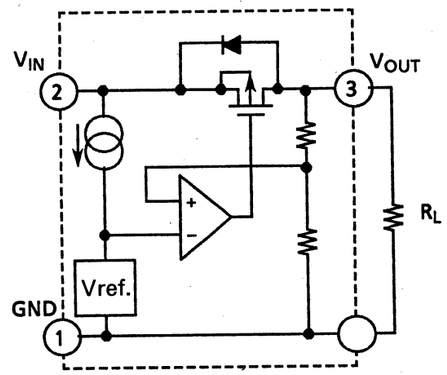

■ S-81233SGUP-X [SEIKO]
(Refer to S-81224SGUP-X.)

■ S-81240SGUP-X [SEIKO]
(Refer to S-81224SGUP-X.)

■ S-81250SGUP-X [SEIKO]
(Refer to S-81224SGUP-X.)

■ SN74CBT3253PW-X [TEXAS]
(2 Circuit 4 Bit-1 Bit FET Multiplexer/Demultiplexer)

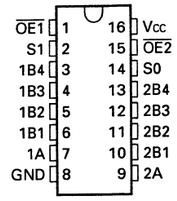

Top View

S1	S0	$\overline{OE1}$	$\overline{OE2}$	FUNCTION
X	X	X	H	Disconnect 1A
X	X	H	X	Disconnect 2A
L	L	L	L	1A to 1B1 and 2A to 2B1
L	H	L	L	1A to 1B2 and 2A to 2B2
H	L	L	L	1A to 1B3 and 2A to 2B3
H	H	L	L	1A to 1B4 and 2A to 2B4

H:High Level
L:Low Level
X:Dont Care

■ SN74CBT3345PW-X [TEXAS]
(8 Bit Cross Bar Switch)

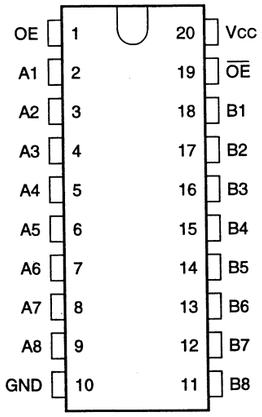

(Top View)

Inputs		Inputs/Outputs
OE	$\overline{OE}$	A, B
X	L	A=B
H	X	A=B
L	H	Z

H : High Level
L : Low Level
X : Don't Care
Z : High Impedance

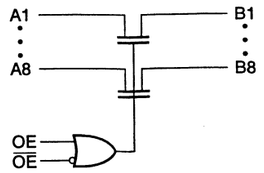

4-41

■ SN74LV08APW-X [TEXAS]
(Quad 2-Input AND Gates)

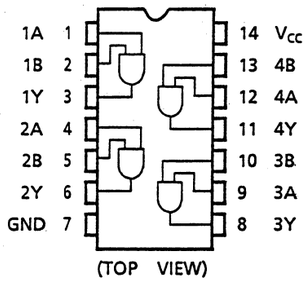

(TOP VIEW)

TRUE Table

A	B	Y
L	L	L
L	H	L
H	L	L
H	H	H

■ SN74LV125APW-X [TEXAS]
(Quad Bus Buffer Gates With 3-State Outputs)

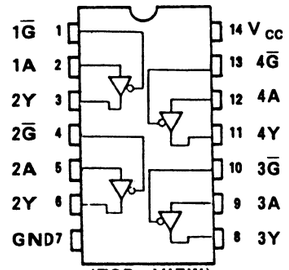

(TOP VIEW)

TC74HC125A TRUE Table

INPUTS		OUTPUTS
G	A	Y
H	X	Z
L	L	L
L	H	H

X : Don't Care
Z : High Impedance

■ TA75S01F-X [TOSHIBA]
(Single Op.Amp.)

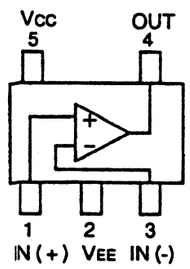

■ SN74LV244APW-X [TEXAS]
(Octal Buffers AND Line Drivers With NON-Inverted 3-State Outputs)

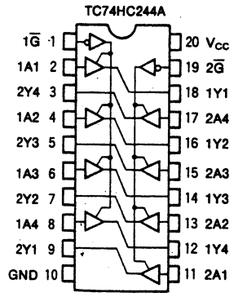

(TOP VIEW)

TRUE Table

INPUTS		OUTPUTS
G̅	A_n	Y_n
L	L	L
L	H	H
H	X	Z

X : Don't Care
Z : High Impedance

■ TC4053BFT-X [TOSHIBA]
(Triple 2 Channel Analog Multiplexers/ Demultiplexers)

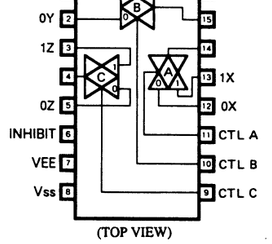

(TOP VIEW)

TRUTH TABLE

CONTROL INPUTS				"ON" CHANNEL
INHIBIT	C	B	A	4053BP 4053BF
L	L	L	L	0X, 0Y, 0Z
L	L	L	H	1X, 0Y,0Z
L	L	H	L	0X, 1Y, 0Z
L	L	H	H	1X, 1Y, 0Z
L	H	L	L	0X, 0Y, 1Z
L	H	L	H	1X, 0Y, 1Z
L	H	H	L	0X, 1Y, 1Z
L	H	H	H	1X, 1Y, 1Z
H	*	*	*	NOTE

* Don't Care,

■ TC4S66F-X [TOSHIBA]
(Bilateral Switch)

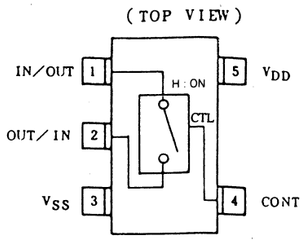

CONTROL	IMPEDANCE BETWEEN IN/OUT - OUT/IN *
H	$0.5 \sim 5 \times 10^2\ \Omega$
L	$> 10^9\ \Omega$

※ See Electrical Characteristics

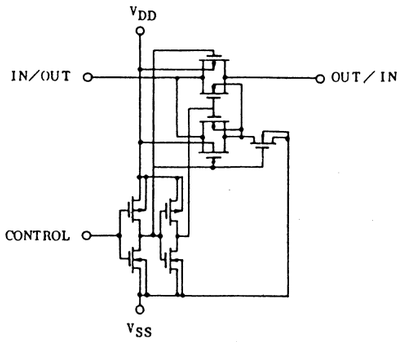

■ TC4S81F-X [TOSHIBA]
(2-Input AND Gate)

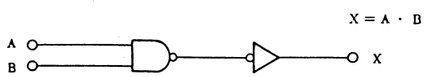

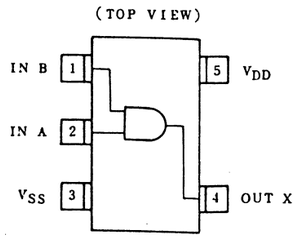

■ TC4W66FU-X [TOSHIBA]
(Analog Switch)

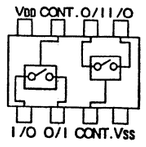

■ TC4W53FU-X [TOSHIBA]
(2-Channel Multiplexer)

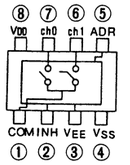

TRUE TABLE

CONTROL INPUT		ON CHANNEL
INH	ADR	
L	L	ch0
L	H	ch1
H	*	NONE

*Don't care

■ TC74HC165AF-X [TOSHIBA]
(8-Bit Serial or Parallel-In/Serial Out Shift Registers With Complementary Out)

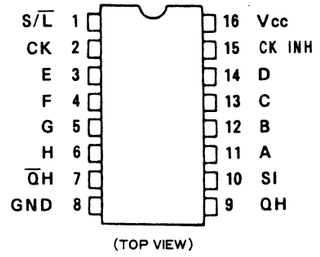

(TOP VIEW)

Timing chart

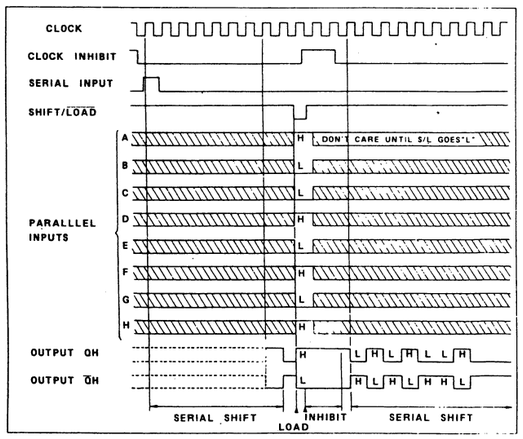

■ TC74AC04P [TOSHIBA]
(Hex Inverters)

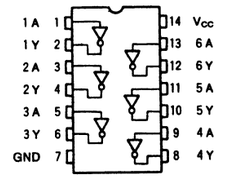

(TOP VIEW)

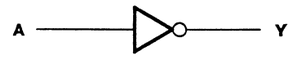

4-42

■ TC74HC40103AF-X [TOSHIBA]
(8-Bit Binary Programmable Down Counter)

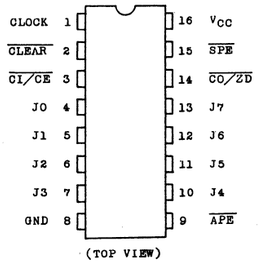

(TOP VIEW)

TRUE Table

CONTROL INPUTS				MODE	OPERATION
CLEAR	APE	BPE	CI/CE		
H	H	H	H	Counting inhibited	No counting notwithstanding clock is applied.
H	H	H	L	Normal counting	Counting-down starts at the rise of clock.
H	H	L	X	Synchronous preset	Data of PI terminal is preset at the rise of clock.
H	L	X	X	Asynchronous preset	Data of PI terminal is preset asynchronously with clock.
L	X	X	X	Cleared	Reset to the maximum count*.

Note: 1. X : Don't care.
2. Maximum count : "255" in TC74HC40103.

Timing chart

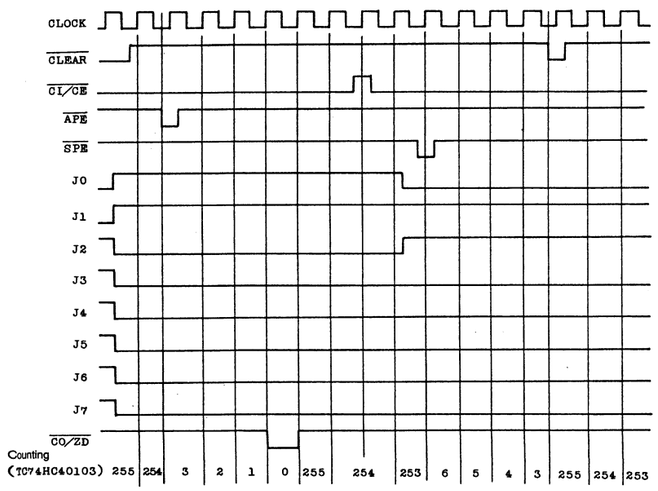

■ TC74HC4538AFT-X [TOSHIBA]
(Dual Retriggerable Monostable Multivibrator)

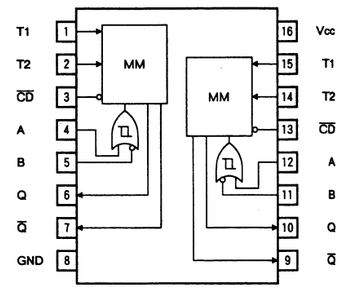

TOP VIEW

TRUE Table

INPUT			OUTPUT		NOTE
A	B	CD	Q	Q	
↓	H	H	⊓	⊔	OUTPUT ENABLE
X	L	H	L	H	INHIBIT
H	X	H	L	H	INHIBIT
L	↑	H	⊓	⊔	OUTPUT ENABLE
X	X	L	L	H	INHIBIT

X:Don't Care

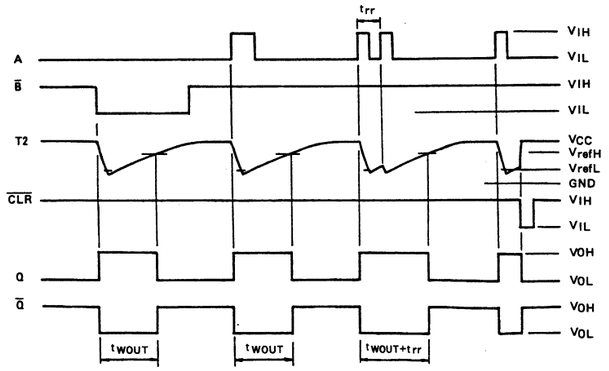

■ TC74HC4053AFT-X [TOSHIBA]
(Triple 2-Channel Analog Multiplexer/Demultiplexer)

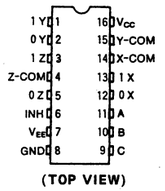

(TOP VIEW)

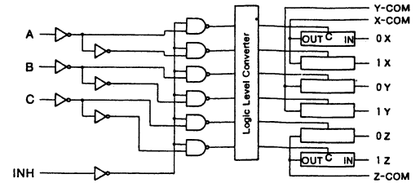

TRUE Table

CONTROL INPUTS				"ON" CHANNEL
INHIBIT	C*	B	A	HC4053A
L	L	L	L	0X, 0Y, 0Z
L	L	L	H	1X, 0Y, 0Z
L	L	H	L	0X, 1Y, 0Z
L	L	H	H	1X, 1Y, 0Z
L	H	L	L	0X, 0Y, 1Z
L	H	L	H	1X, 0Y, 1Z
L	H	H	L	0X, 1Y, 1Z
L	H	H	H	1X, 1Y, 1Z
H	X	X	X	NONE

X : DON'T CARE.

■ TC74VHC174FT-X [TOSHIBA]
(HEX D-Type Flip Flop With Common Clock and direct Clear)

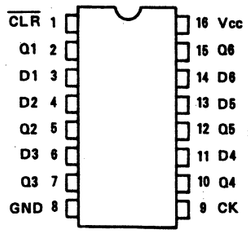

(TOP VIEW)

TRUE Table

INPUTS			OUTPUT	FUNCTION
CLR	D	CK	Q	
L	X	X	L	CLEAR
H	L	↑	L	–
H	H	↑	H	–
H	X	↓	Qn	NO CHANGE

X : Don't care

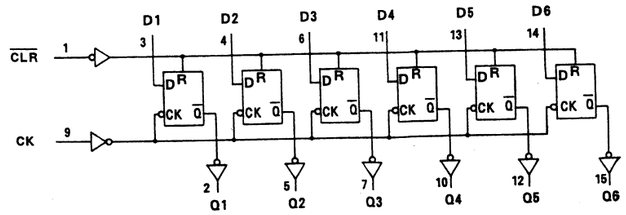

■ TC74VHC02FT-X [TOSHIBA]
(Quad 2-Input NOR Gates)

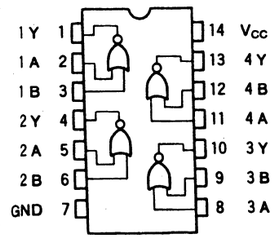

(TOP VIEW)

TRUE Table

A	B	Y
L	L	H
L	H	L
H	L	L
H	H	L

■ TC74VHC04FT-X [TOSHIBA]
(Refer to TC74AC04P.)

■ TC74VHC08FT-X [TOSHIBA]
(Refer to SN74LV08APW-X.)

■ TC7S66FU-X [TOSHIBA]
(Analog SW)

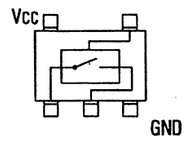

■ TC7SH04FU-X [TOSHIBA]
(Inverter)

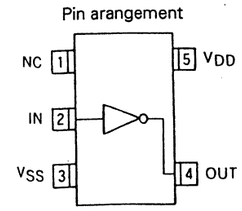

4-43

■ TC74VHC373FT-X [TOSHIBA]
(Octal D-Type Latch With NON-Inverted 3-State Output)

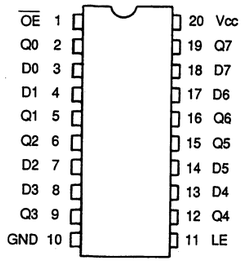

(Top View)

TRUE Table

INPUTS			OUTPUTS
$\overline{OE}$	LE	D	
H	X	X	Z
L	L	X	Q_n
L	H	L	L
L	H	H	H

X : Don't Care
Z : Hi impedance
Qn : Q output level before the LE become "L".

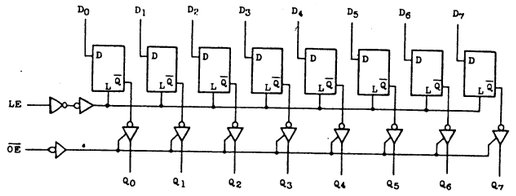

■ TC74VHC74FT-X [TOSHIBA]
(Dual D-Type Positive-EDGE-Triggered Flip-Flops With Preset AND Clear)

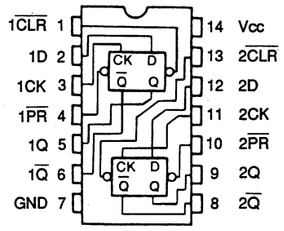

(Top View)

TRUE Table

INPUTS				OUTPUTS		FUNCTION
$\overline{CLR}$	$\overline{PR}$	D	CK	Q	$\overline{Q}$	
L	H	X	X	L	H	CLEAR
H	L	X	X	H	L	PRESET
L	L	X	X	H	H	—
H	H	L	↑	L	H	—
H	H	H	↑	H	L	—
H	H	X	↓	Q_n	$\overline{Q}_n$	NO CHANGE

X : Don't care

■ TC74VHCT541AFTX [TOSHIBA]
(Refer to TC74VHC541FT-X.)

■ TC7SH08FU-X [TOSHIBA]
(Refer to TC7S08FU-X.)

■ TC74VHC541FT-X [TOSHIBA]
(Octal Bus Buffer With Inverted 3-State Outputs)

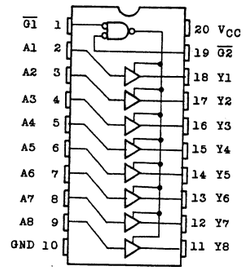

(TOP VIEW)

TRUE Table

INPUT			OUTPUT
$\overline{G}1$	$\overline{G}2$	A	Y
L	L	H	H
L	L	L	L
H	X	X	Z
X	H	X	Z

■ TC7S08FU-X [TOSHIBA]
(2 Input Single AND Gate)

TRUE Table

A	B	X
L	L	L
L	H	L
H	L	L
H	H	H

■ TC7SH86FU-X [TOSHIBA]
(Single Exclusive OR Gate)

■ TC7W08FU-X [TOSHIBA]
(2 Input Dual AND Gate)

■ TC7SH00FU-X [TOSHIBA]
(2-Input NAND Gate)

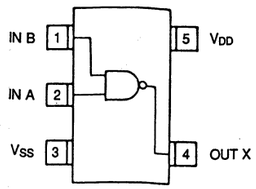

TRUE Table

A	B	X
L	L	H
L	H	H
H	L	H
H	H	L

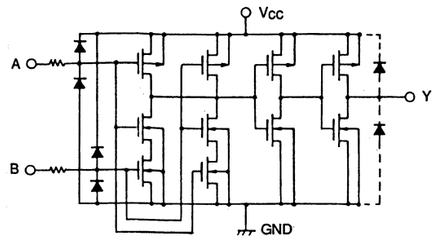

■ TC7W00FU-X [TOSHIBA]
(2 Input Dual NAND Gate)

TRUE Table

A	B	X
L	L	H
L	H	H
H	L	H
H	H	L

■ TC7W32FU-X [TOSHIBA]
(2 Input Dual OR Gate)

TRUE Table

A	B	X
L	L	L
L	H	H
H	L	H
H	H	H

■ TC7WH126FU-X [TOSHIBA]
(Dual Bus Buffer)

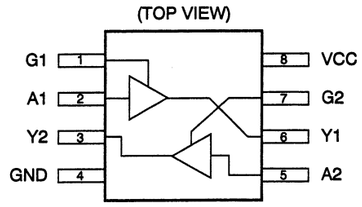

Truth Table

INPUTS		OUTPUTS
G	A	Y
L	X	Z
H	L	L
H	H	H

X : Don't Cate
Z : High Impedance

■ TC7WH157FU-X [TOSHIBA]
(2 Channel Multiplexer)

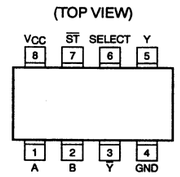

Truth table

INPUTS				OUTPUTS	
$\overline{ST}$	SELECT	A	B	Y	$\overline{Y}$
H	X	X	X	L	H
L	L	L	X	L	H
L	L	H	X	H	L
L	H	X	L	L	H
L	H	X	H	H	L

X : Don't care

■ TLC2932IPW-X [TEXAS]
(PLL)

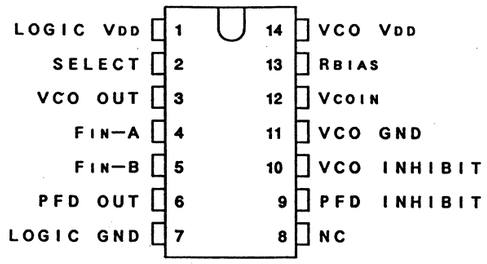

4-44

■ TDA8766G/C1 [PHILIPS]
(10 Bit High-Speed 2.7 to 5.25V Analog-to-Digital Converter)

(Top View)

SYMBOL	PIN	DESCRIPTION
D9	1	data output; bit 9 (MSB)
IR	2	in range data output
V_{SSD1}	3	digital ground 1
V_{DDD1}	4	digital supply voltage 1 (2.7 to 5.25 V)
CLK	5	clock input
STDBY	6	standby mode input
V_{DDA}	7	analog supply voltage (2.7 to 5.25 V)
n.c.	8	not connected
V_{SSA}	9	analog ground
V_{RB}	10	reference voltage BOTTOM input
V_{RM}	11	reference voltage MIDDLE
n.c.	12	not connected
n.c.	13	not connected
V_I	14	analog input voltage
V_{RT}	15	reference voltage TOP input
$\overline{OE}$	16	output enable input
n.c.	17	not connected

SYMBOL	PIN	DESCRIPTION
V_{DDD2}	18	digital supply voltage 2 (2.7 to 5.25 V)
V_{SSD2}	19	digital ground 2
V_{DDO}	20	positive supply voltage for output stage (2.5 to 5.25 V)
V_{SSO}	21	digital output ground
D0	22	data output; bit 0 (LSB)
D1	23	data output; bit 1
n.c.	24	not connected
D2	25	data output; bit 2
D3	26	data output; bit 3
D4	27	data output; bit 4
D5	28	data output; bit 5
D6	29	data output; bit 6
D7	30	data output; bit 7
D8	31	data output; bit 8
n.c.	32	not connected

■ UPC29L05T-X [NEC]
(Voltage Regulator)

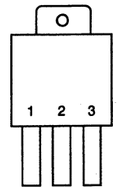

1: INPUT
2: GND
3: OUTPUT

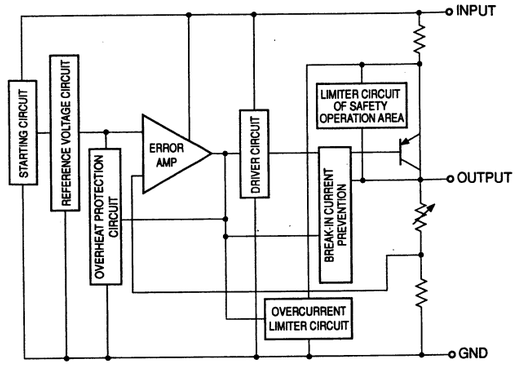

■ UPC4082G2-X [NEC]
(J-FET Input Dual Op-Amplifire)

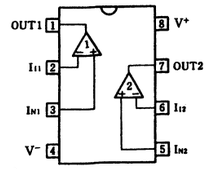

(TOP VIEW)

■ UPC812G2-X [NEC]
(Op.Amp.)

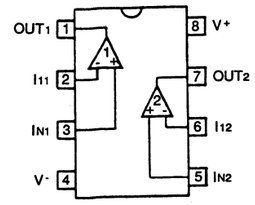

■ UPC2384GA [NEC]
(Digital VTR PLL)

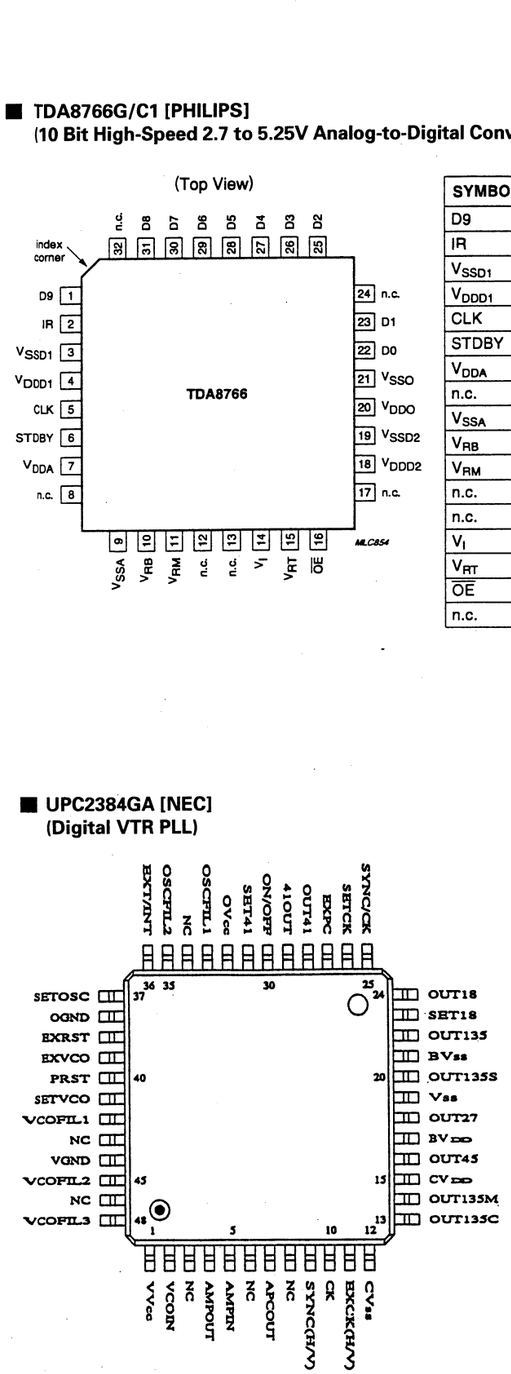

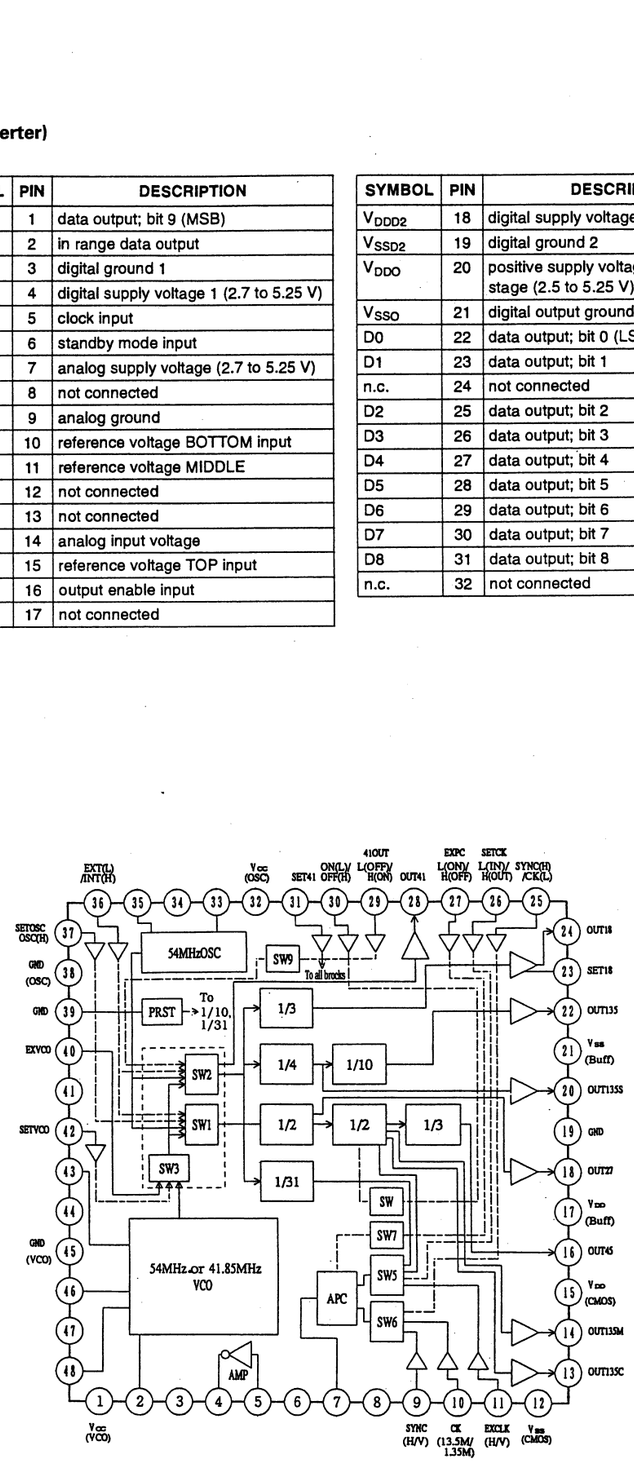

■ UPD42S4260ALG5 [NEC]
(3.3V 4M Bit Dynamic RAM)

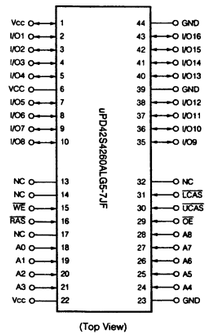

(Top View)

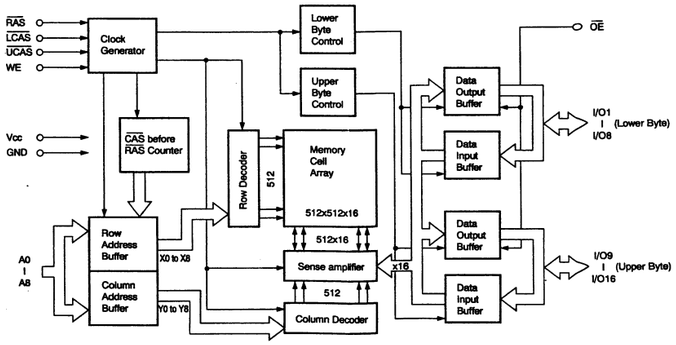

4-45

■ UPD16510GR-X [NEC]
(Level Shifter)

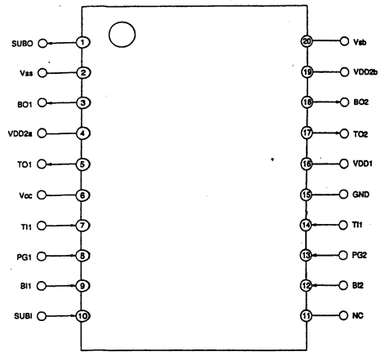

TOP VIEW

INPUT				OUTPUT		
TI1,2	PG	BI1,2	SUBI	TO1,2	BO1,2	SUBO
L	H	–	–	VHa	–	–
H	H	–	–	VL	–	–
L	L	–	–	VH	–	–
H	L	–	–	VL	–	–
–	–	L	–	–	VHb	–
–	–	H	–	–	VL	–
–	–	–	L			VL
–	–	–	H			VHH

(VL=VSS、VHa=VDD2a、VHb=VDD2b、VH=VDD1、VHH=Vsb)

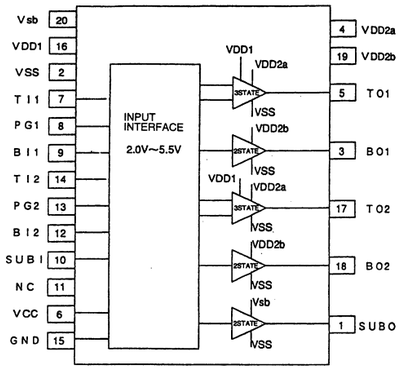

INPUT PULSE TIMING CHART

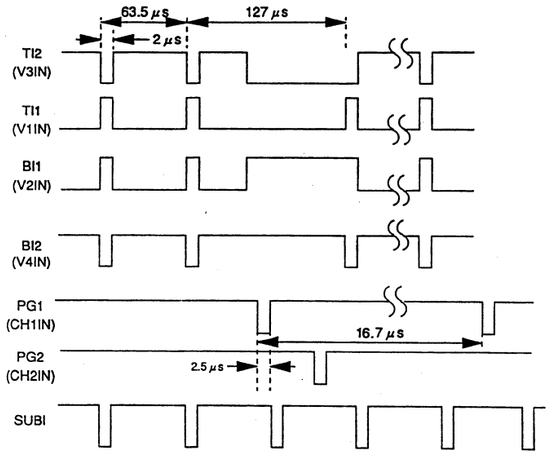

OVERLAP EXPANSION CHART

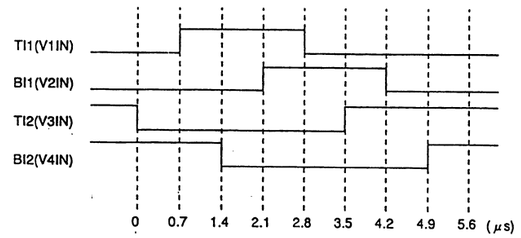

INPUT WAVE FORM

■ UPD489001 [NEC]
(5M Bit Field Buffer)

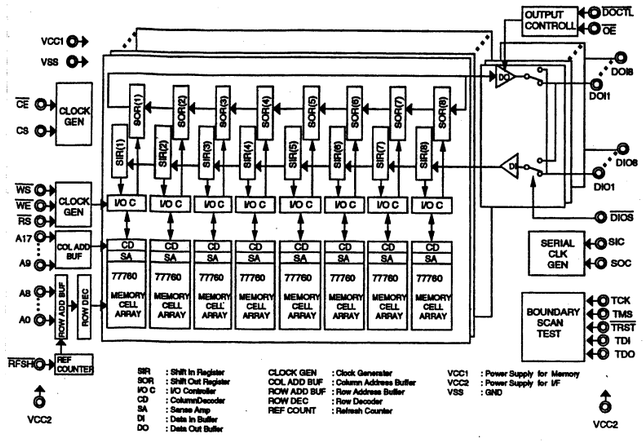

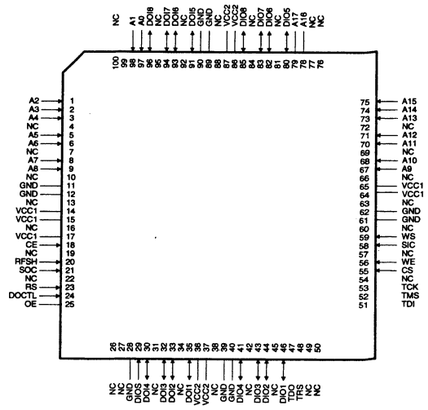

Pin No.	Label	In/Out	Description
1	A2	In	Shuffle memory address (18 MHz, 18 bit)
2	A3	In	
3	A4	In	
4	NC	–	Not used
5	A5	In	Shuffle memory address (18 MHz, 18 bit)
6	A6	In	
7	NC	–	Not used
8	A7	In	Shuffle memory address (18 MHz, 18 bit)
9	A8	In	
10	NC	–	Not used
11	GND	–	Ground
12	GND	–	
13	NC	–	Not used
14	VCC1	–	Power supply (+3 V)
15	VCC1	–	
16	NC	–	Not used
17	VCC1	–	–
18	CE	In	Shuffle memory chip enable
19	NC	–	Not used
20	RFSH	–	–
21	SOC	In	Clock input (18 MHz) from CLK OSC IC
22	NC	–	Not used
23	RS	In	Shuffle memory read strobe
24	DOCTL	In	Shuffle memory data output control
25	OE	–	Low fixed
26	NC	–	Not used
27	NC	–	Not used
28	GND	–	Ground
29	DIOS	In	Shuffle memory data I/O select
30	DOI4	In/Out	Shuffle memory data (8 bit)
31	NC	–	Not used
32	DOI3	In/Out	Shuffle memory data (8 bit)
33	DOI2	In/Out	
34	NC	–	Not used
35	DOI1	In/Out	Shuffle memory data (8 bit)
36	VCC2	–	Power supply (+3 V)
37	VCC2	–	
38	NC	–	Not used
39	GND	–	Ground
40	GND	–	
41	DIO4	In/Out	Shuffle memory data (8 bit)
42	NC	–	Not used
43	DIO3	In/Out	Shuffle memory data (8 bit)
44	DIO2	In/Out	
45	NC	–	Not used
46	DIO1	In/Out	Shuffle memory data (8 bit)
47	TDO	–	–
48	TRS	–	–
49	NC	–	Not used
50	NC	–	Not used

Pin No.	Label	In/Out	Description
51	TDI	–	–
52	TMS	–	–
53	TCK	–	–
54	NC	–	Not used
55	CS	–	High fixed
56	WE	In	Write enable from SHUFFLE IC
57	NC	–	Not used
58	SIC	In	Clock input (18 MHz)
59	WS	In	Shuffle memory control write strobe
60	NC	–	Not used
61	GND	–	Ground
62	GND	–	
63	NC	–	Not used
64	VCC1	–	Power supply (+3 V)
65	VCC1	–	
66	NC	–	Not used
67	A9	In	Shuffle memory address (18 MHz, 18 bit)
68	A10	In	
69	NC	–	Not used
70	A11	In	Shuffle memory address (18 MHz, 18 bit)
71	A12	In	
72	NC	–	Not used
73	A13	In	Shuffle memory address (18 MHz, 18 bit)
74	A14	In	
75	A15	In	
76	NC	–	Not used
77	NC	–	Not used
78	A16	In	Shuffle memory address (18 MHz, 18 bit)
79	A17	In	
80	DIO5	In/Out	Shuffle memory data (8 bit)
81	NC	–	Not used
82	DIO6	In/Out	Shuffle memory data (8 bit)
83	DIO7	In/Out	
84	NC	–	Not used
85	DIO8	In/Out	Shuffle memory data (8 bit)
86	VCC2	–	Power supply (+3 V)
87	VCC2	–	
88	NC	–	Not used
89	GND	–	Ground
90	GND	–	
91	DOI5	In/Out	Shuffle memory data (8 bit)
92	NC	–	Not used
93	DOI6	In/Out	Shuffle memory data (8 bit)
94	DOI7	In/Out	
95	NC	–	Not used
96	DOI8	In/Out	Shuffle memory data (8 bit)
97	A0	In	Shuffle memory address (18 MHz, 18 bit)
98	A1	In	–
99	NC	–	Not used
100	NC	–	Not used

4-46

■ UPD6453GT-101 [NEC]
(On Screen Charactor Generator)

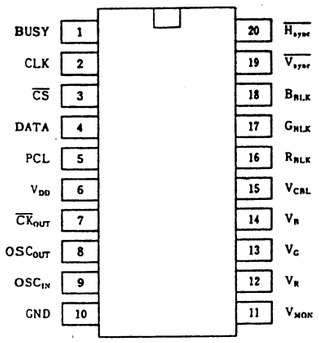

(TOP VIEW)

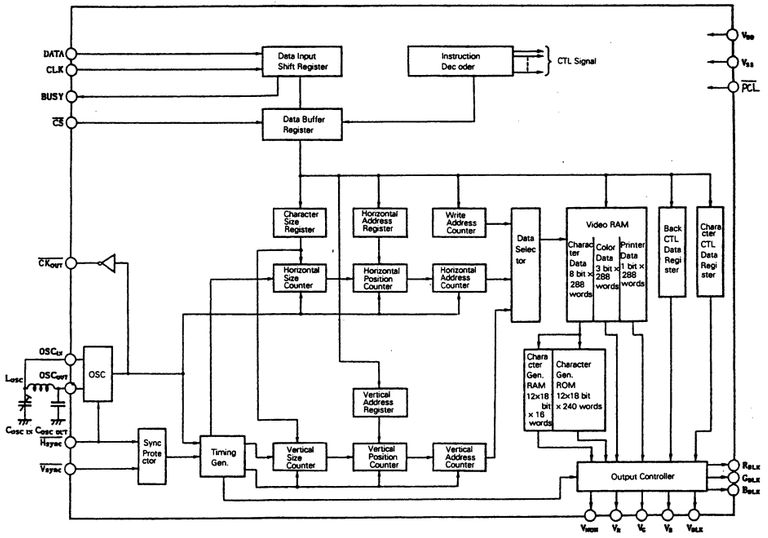

■ UPD71055GB-10 [NEC]
(Parallel Input/Output Port)

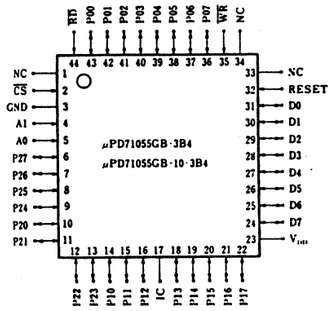

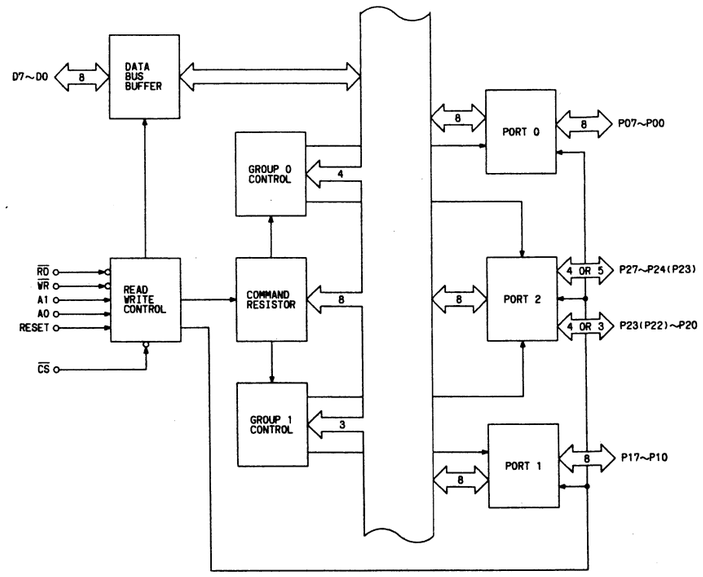

■ UPD78P58YGC-3B9 [NEC]
(8 Bit Single Chip Microcomputer with 60k Byte One Time P-ROM)

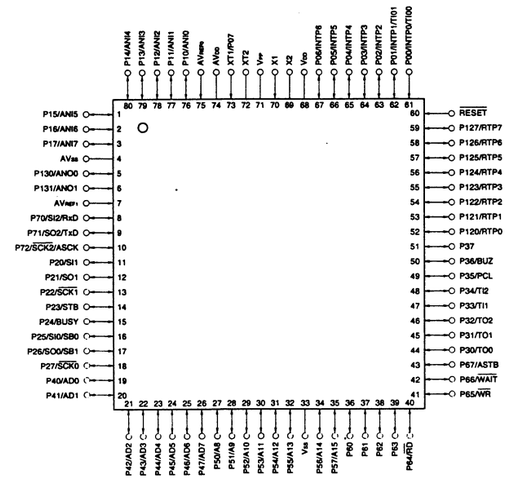

P00-P07	: Port0	SB0, SB1	: Serial Bus	WAIT	: Wait
P10-P17	: Port1	SI0-SI2	: Serial Input	ASTB	: Address Strobe
P20-P27	: Port2	SO0-SO2	: Serial Output	X1, X2	: Crystal (Main System Clock)
P30-P37	: Port3	SCK0-SCK2	: Serial Clock	XT1, XT2	: Crystal (Subsystem Clock)
P40-P47	: Port4	RxD	: Receive Data	RESET	: Reset
P50-P57	: Port5	TxD	: Transmit Data	ANI0-ANI7	: Analog Input
P60-P67	: Port6	ASCK	: Asynchronous Serial Clock	ANO0, ANO1	: Analog Output
P70-P72	: Port7	PCL	: Programmable Clock	AVDD	: Analog Power Supply
P120-P127	: Port12	BUZ	: Buzzer Clock	AVSS	: Analog Ground
P130, P131	: Port13	STB	: Strobe	AVREF0, 1	: Analog Reference Voltage
RTP0-RTP7	: Real-Time Output Port	BUSY	: Busy	VDD	: Power Supply
INTP0-INTP6	: Interrupt from Peripherals	AD0-AD7	: Address/Data Bus	VPP	: Programming Power Supply
TI00, TI01	: Timer Input	A8-A15	: Address Bus	VSS	: Ground
TI1, TI2	: Timer Input	RD	: Read Strobe		
TO0-TO2	: Timer Output	WR	: Write Strobe		

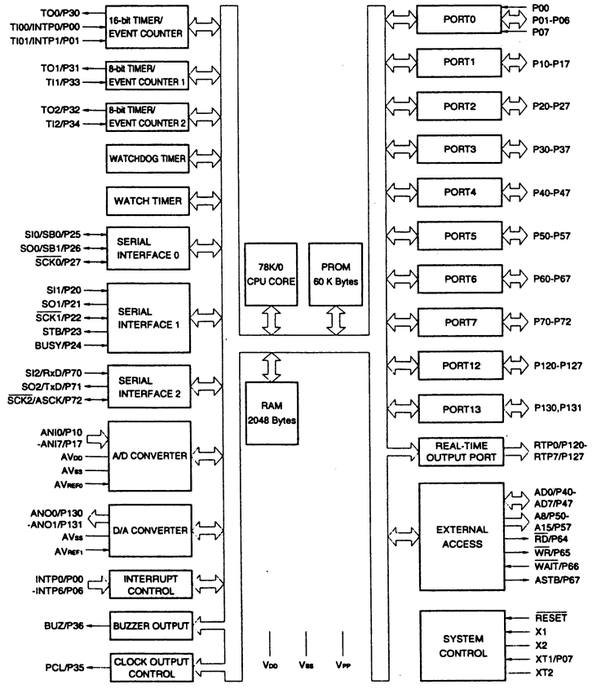

■ XC9536XL-10Q-01 [XILINX]
(Programmable Complex Programmable Logic Device)

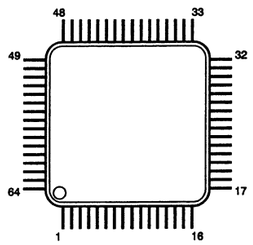

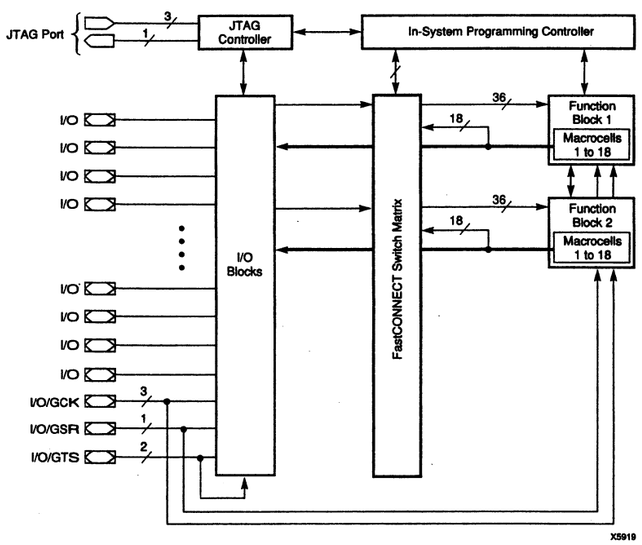

4-48

SECTION 5
EXPLODED VIEWS AND ASSEMBLY LIST

● **SAFETY PRECATION**

Parts identified by the ⚠ symbol are critical for safety.
Replace only with specified parts numbers.

● **NOTE**

Parts not denoted by parts numbers are not supplied by JVC.
Parts in gray box (▒▒▒) are different from the DY-90.

This section only describes the EXPLODED VIEWS AND ASSEMBLY LIST that are different from the DY-90.
On servicing, refer to the service manual (No. 9360R) for DY-90 together with this.

■ CAMERA HEAD ASSEMBLY PARTS LIST M1

M1MM□□□□

Symbol No.	Part No.	Part Name	Description
1	SC10221-011	FRONT FRAME	
2	SC46410-150	SHIELD TUBE	
3	SC42550-011	C HOLDER	
4	SC45239-003	LENS CONNECTOR BRACKET	
5	SCV1938-12S	LENS CONNECTOR	
6	MLSC0691-001	WIRE ASSEMBLY	
7	SC31363-011	FILTER KNOB	
8	SC46312-001	GEAR HOLDER	
9	SC20689-001	DR BRACKET	
10	SC44828-011	KNOB	
11	SC43825-002	CAP	
12	SCV2981-001	VF CONNECTOR ASSEMBLY	
14	QQR0490-001	FERRITE CORE	
15	SC32164-001	FILTER BASE	
16	SC44939-001	SPACER	
17	SC44508-012	FILTER SHAFT	
18	QYWFM416525	PLASTIC WASHER	
19	SC44505-001	F.I GEAR	
20	SC46225-001	F.I SHAFT	
21	SC31365-001	FILTER WHEEL	
22	SC44651-001	FILTER	CLEAR, 3200K
23	SC44653-041	FILTER	BROWN, 1/8ND (E)
	SC44652-001	FILTER	OREANGE, 5600K (U)
24	SC44652-001	FILTER	OREANGE, 5600K (E)
	SC44653-031	FILTER	BROWN, 1/16 ND (U)
25	SC44653-051	FILTER	BROWN, 1/64 ND (E)
	SC45117-001	FILTER	EFFECT (CROSS) (U)
26	SC45118-002	FILTER SHEET	
27	SC44649-001	F.W.SHAFT	
28	Q03093-841	PLASTIC WASHER	
29	SC44506-001	FILTER STOPPER	
30	SC44627-001	FILTER SPRING	
31	SC31364-004	FILTER COVER	
32	SC44676-005	FILTER CAP ASSEMBLY	
33	SC83183-004	FILTER BOARD	
34	QGA1501C1-05	CONNECTOR	
⚠ 35	SCM1059-P0A	OP BLOCK ASSEMBLY	(E/EC)
⚠ 35	SCM1059-N0A	OP BLOCK ASSEMBLY	(U)
⚠ 35A	SCV2803-3009B	FFC WIRE	<ISB/ISG/ISR TO DR>
35B	SC44704-002	SCREW	
35C	SC31370-001	MOUNT RING	
35D	SC40779-001	MOUNT SCREW	
36	SC46375-001	OP BRACKET	
37	PU49485-4	WIRE CLAMP	
38	SC46372-340	SHIELD TUBE	
39	SC46381-001	MT CUSHION	
40	SC43021-004	CUSHION	
41	QQR0895-008	FPC CORE	
42	QQR0490-001	FILTER	
43	SCV2728-001	FILTER	
44	PRD30030-162	PAD	
45	SC46422-001	CUSHION	
46	SC46420-001	PLATE	
S29	QYSDSP2605Z	SCREW	M2.6 x 5
S31	QYSDSP3006M	SCREW	M3 x 6
S32	QYSDSF2006M	SCREW	M2 x 5
S34	QYYASPR3004M	SCREW	M3 x 4
S36	QYSPSPT2030M	SCREW	M2 x 3.0
S37	QYSSSPT2050M	SCREW	M2 x 5.0
S38	SC43397-003	SCREW	
S39	QYSPSPT2050M	SCREW	M2 x 5.0
S40	QYSPSPL3004Z	SCREW	M3 x 4
S43	QYSDSP2606M	SCREW	M2.6 x 6
S58	QYSDSP2605M	SCREW	M2.6 x 5.0

5.1 CAMERA HEAD ASSEMBLY M1

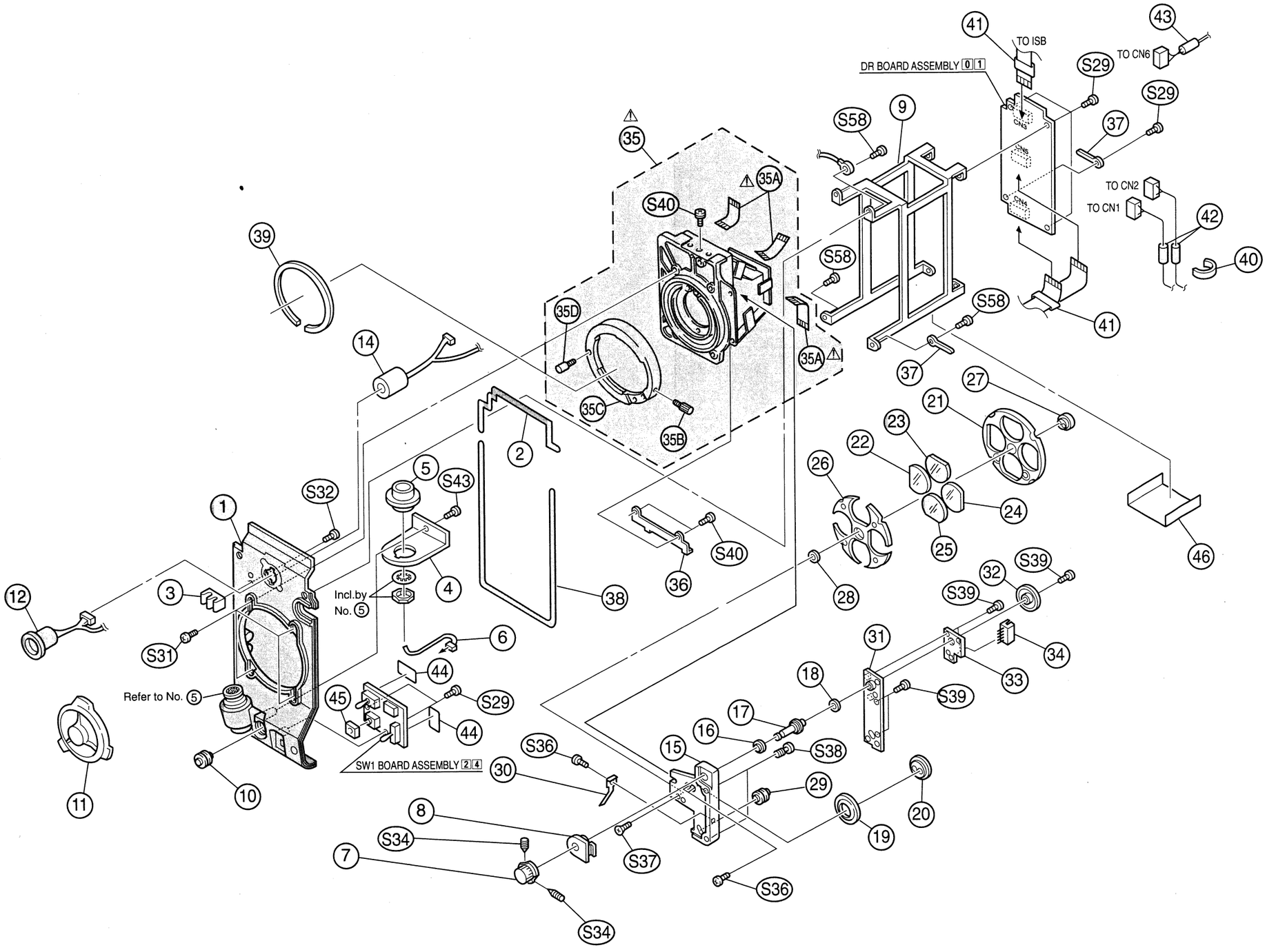

5-3

5.2 CABINET ASSEMBLY M 2

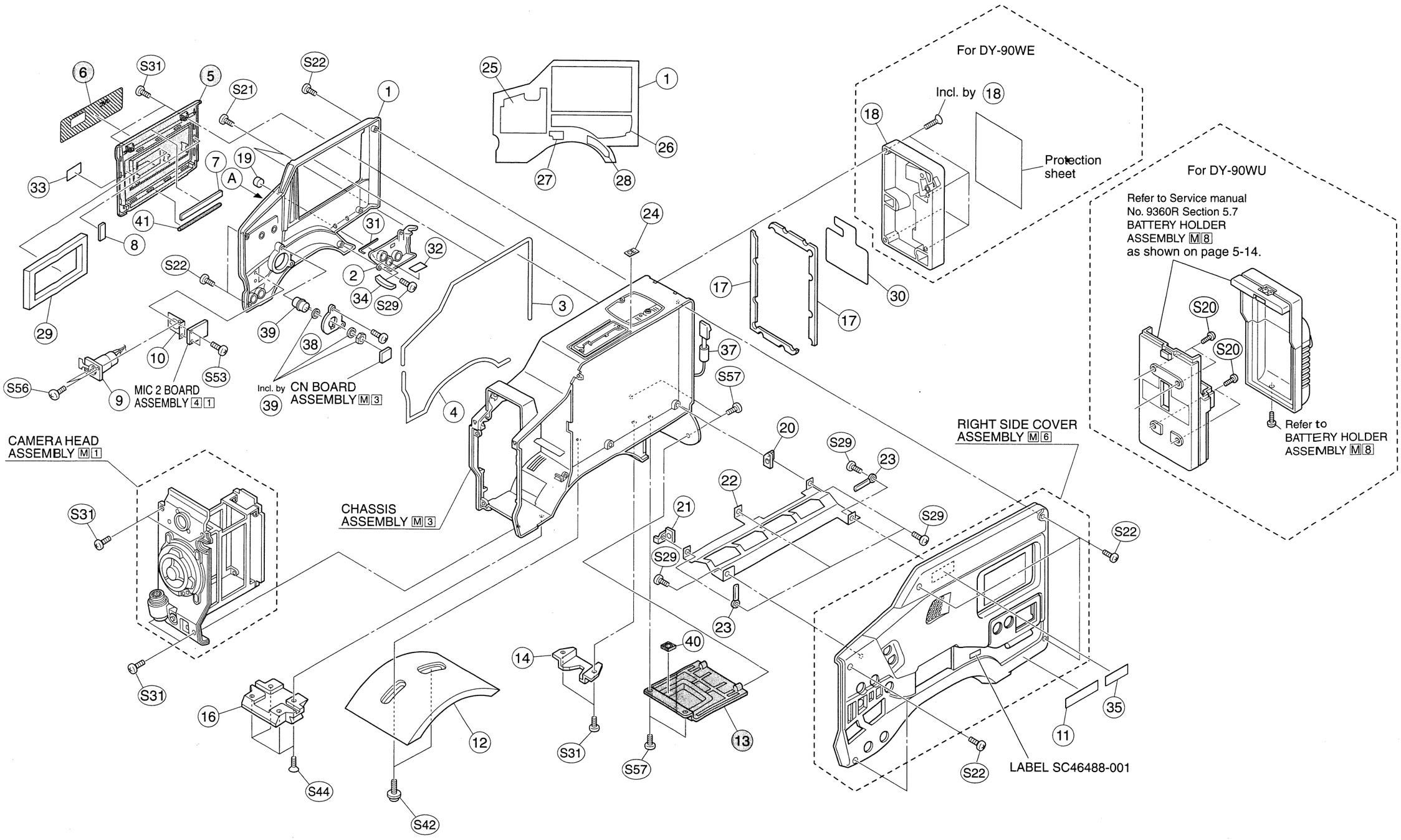

■ CABINET ASSEMBLY PARTS LIST M2

M2MM□□□□

Symbol No.	Part No.	Part Name	Description
1	SC10225-001	L.SIDE COVER	(E)
	SC10225-002	L.SIDE COVER	(U)
2	SC20693-002	L.SIDE PANEL	
3	SC46410-500	GASKET	
4	SC46410-480	GASKET	
5	SC10226-003	CASSETE COVER	
6	SC32177-021	WINDOW	
7	SC46321-001	ABSORB SHEET	
8	SC46321-002	ABSORB SHEET	
9	QNZ0208-001	CONNECTOR	MIC2
10	SC46246-001	MIC BRACKET	
11	PU54392-1	LABEL	(E)
	SC43658-001	LABEL	(U)
12	SC10227-001	SHOLDER PAD	
13	SC20709-011	BOTTOM COVER	
14	SC46242-002	REAR BASE	
16	SC20691-001	FRONT BASE	
17	SC46243-001	BH CUSHION	
18	SCV2580-001	BATT.BRACKET	(E)
19	SC45291-001	CAP	
20	PRD44896	STAY	
21	PRD44897	STAY	
22	SC32174-002	HINGE	
23	PU49485-4	WIRE CLAMP	
24	SC45925-001	LABEL	(E)
25	SC32201-001	ABSORB SHEET(L)	
26	SC32201-002	ABSORB SHEET(L)	
27	SC32201-003	ABSORB SHEET(L)	
28	SC32201-004	ABSORB SHEET(L)	
29	SC32172-001	CUSHION RUBBER	
30	SC46383-001	SHEET	
31	SC46412-001	SHIELD CUSHION	
32	SC46374-001	SHEET	
33	PRD45092-02	LABEL	
34	SC46412-002	SHIELD CUSHION	
35	—	UL LABEL	(U)
37	SSV2252	CLAMP CORE	(E)
38	SC46421-001	6P PLATE	
39	QNZ0260-001	RECEPTACLE (6S)	TO SETUP-BOX
40	SC46573-011	CUSHION	
41	SC46613-200	GASKET	
S20	QYSDSP3008M	SCREW	M3 x 8 (U)
S22	SC43397-009	SCREW	
S29	QYSDSP2605Z	SCREW	M2.6 x 5
S31	QYSDSP3006M	SCREW	M3 x 6
S31	QYSDSP3006M	SCREW	M3 x 6
S42	QYSPSPD3006M	SCREW	M3 x 6
S44	QYSSSP4008N	SCREW	M4 x 8
S53	QYSPSPT2650M	SCREW	M2.6 x 5.0
S56	QYSPSPT2640N	SCREW	M2.6 x 4.0
S57	QYSPSP2606M	SCREW	M2.6 x 6

5-5

5.3 CHASSIS ASSEMBLY [M 3]

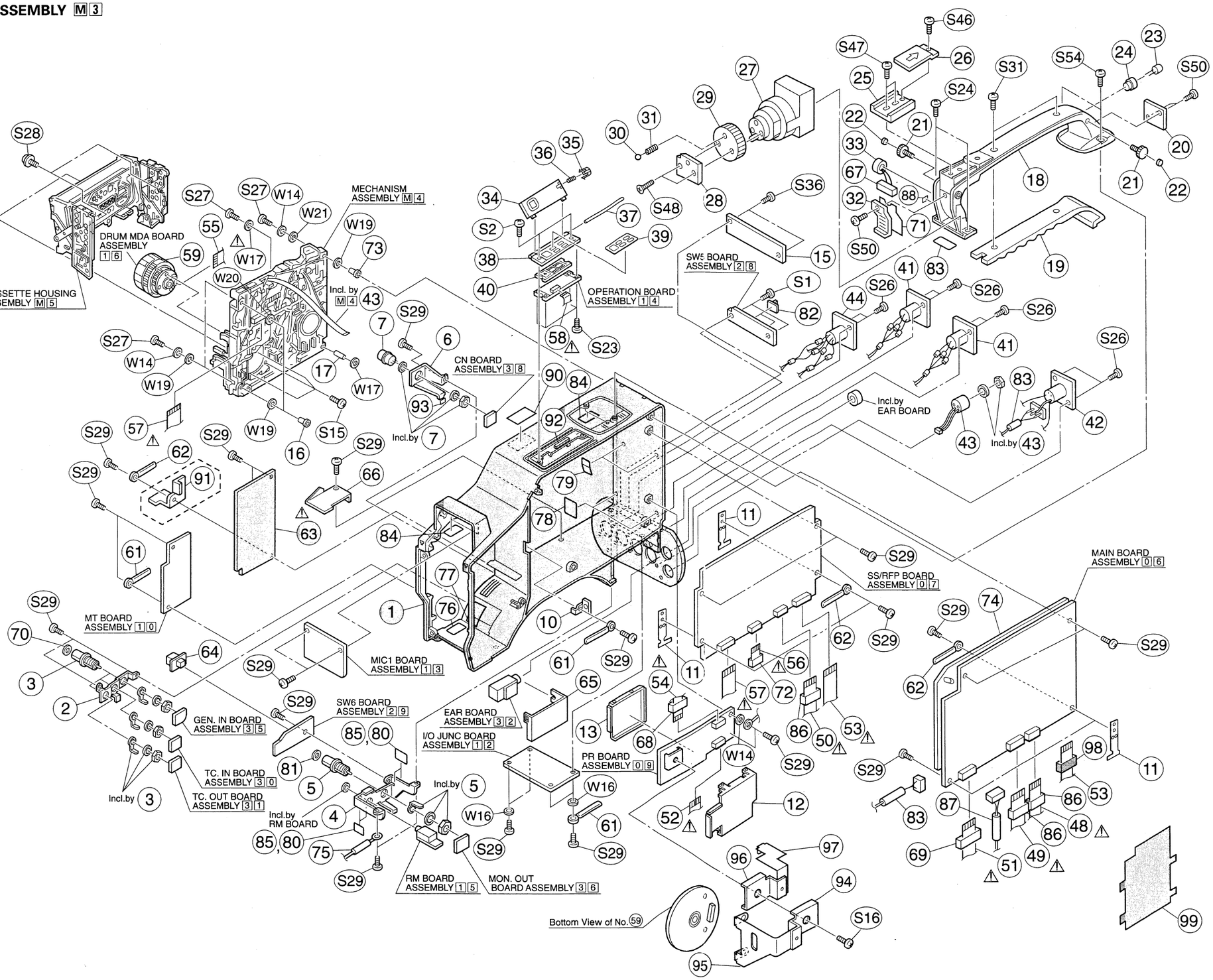

■ CHASSIS ASSEMBLY PARTS LIST M3

M3MM□□□□

Symbol No.	Part No.	Part Name	Description
1	SC10220-003	CENTER FRAME	(E)
	SC10220-012	CENTER FRAME	(U)
2	SC46240-001	BNC BRACKET	
3	QNZ0187-001	BNC CONNECTOR	TC IN/OUT,GEN
4	SC32173-004	CN BRACKET	
5	QNZ0187-001	BNC CONNECTOR	MONITOR OUT
6	SC46245-002	6P BRACKET	
7	QNZ0260-001	RECEPTACLE(6S)	TO SETUP-BOX
10	PRD44897	STAY	
11	PRD44893	HOLDER	
12	SC32175-001	P/R SHIELD(A)	
13	SC32176-001	P/R SHIELD(B)	
15	SC46239-002	REAR N.PLATE	
16	SC46324-002	COLLAR	
17	PRD45133	COLLAR(2) ASSEMBLY	
18	SC10228-001	HANDLE	
19	SC20692-001	HANDLE COVER	
20	SC46244-001	CN COVER	
21	SC46310-001	PIN	
22	SC46311-001	SPACER	
23	SLR-56VR5F	L.E.D.	
24	SM3512	L.E.D.MOUNT	
25	SC40886-001	SHOU	
26	C40936	SPRING	
27	SC32163-002	VF BASE	
28	SC46227-002	SLIDE PLATE	
29	SC45127-002	VF RING	
30	SC40465-045	STEEL BALL	
31	SC46371-001	SPRING	
32	SC46235-002	ADJUST PLATE	
33	SCV0238-06S	CONNECTOR	
34	PRD31229-01-03	DOOR	
35	PRD43840-01-04	KNOB(DOOR)	
36	PRD30023-53	COMP.SPRING 53	
37	PRD43829-03	SHAFT	
38	PRD31228-01-04	HOLDER(OPE)	
39	PRD44890-01-01	PLATE	
40	PRD31233	KNOB(OPE)	
41	QNZ0207-001	RECEPTACLE(3S)	AUD1/AUD2 IN
42	QNZ0249-001	DC IN CONN(4P)	
43	QNZ0257-001	DC OUT CONN(4S)	
44	QNZ0220-001	RECEPTACLE(5P)	
45	SCV2631-001	FERRITE CORE	
⚠ 48	PGW0206-140140	FFC WIRE	<ALCD TO MAIN> CN44
⚠ 49	PGW0206-140180	FFC WIRE	<ALCD TO MAIN> CN43
⚠ 50	PGW0206-200120	FFC WIRE	<ALCD TO SS> CN55
⚠ 51	PGW0206-140240	FFC WIRE	<CP TO MAIN> CN32
⚠ 52	SCV2803-2806B	FFC WIRE	<MAIN TO PR> CN56
⚠ 53	SCV2803-4011B	FFC WIRE	<MAIN TO SS> CN46
⚠ 54	SCV2803-1404B	FFC WIRE	<PR TO SS> CN54
⚠ 55	SCV2803-1804B	FFC WIRE	<PR TO L.DRUM>
⚠ 56	SCV2337-1017BD	FFC WIRE	<SS TO D.MDA>CN53
⚠ 57	SCV2803-4011B	FFC WIRE	<SS TO MIF>CN47
⚠ 58	PGW0206-070080	FFC WIRE	<OPE TO MIF>
⚠ 59	PDR2030A	DRUM FINAL ASSEMBLY	
61	PU49485-4	WIRE CLAMP	
62	PU49485-3	WIRE CLAMP	
⚠ 63	SCV2979-001	PS BOARD ASSEMBLY	
63A	SCV2908-001	CONNECTOR	
64	SC44556-011	TC.KNOB	
65	SC46333-001	SHEET	
66	SC46332-001	WIRE CLAMP	
67	MLSC0692-001	WIRE KIT	
68	QQR0717-032	FERRITE CORE	
69	QQR0895-011	FPC CORE	
70	SC46380-001	BNC CUSHION	
71	SC46237-001	SHEET	
72	QQR0947-001	FERRITE CORE	
73	SC46324-001	COLLAR	
74	SC32229-001	SHIELD PLATE	
75	PGZ02359	FERRITE BEADS	
76	SC46419-001	SHEET	
77	SC46419-002	SHEET	
78	SC46074-004	BKT SHEET	
79	SC45563-003	SHEET	
80	SC45548-002	SHEET	
81	SC46380-002	BNC CUSHION	
82	SC44556-002	KNOB	
83	QQR0490-001	FILTER	
84	SC46074-004	BKT SHEET	
85	QQR0988-002	FERRITE CORE	
86	QQR0895-008	FPC CORE	
87	SCV2728-001	CLAMP FILTER	
88	SC46423-001	LABEL	(U)
89	QQR0765-001	FERRITE CORE	
91	SC46417-001	BRACKET	
92	SC46158-003	SHEET	
93	SC46158-002	SHEET	
94	SC46442-001	SHIELD BRACKET (3)	
95	SC46438-001	SHIELD PLATE (1)	
96	SC46441-001	SHIELD BRACKET (2)	
97	SC46439-001	SHIELD PLATE (2)	
98	QQR0895-011	FERRITE CORE	
99	SC32331-001	SHIELD PLATE	
S1	QYSDSP2004Z	SCREW	M2 x 4
S2	QYSDSP2006M	SCREW	M2 x 6
S15	QYSDSP2606Z	SCREW	M2.6 x 6
S16	QYSDSP3004Z	SCREW	M3 x 4
S23	QYSDSF2004Z	SCREW	M2 x 4
S24	QYSDSP4006M	SCREW	M4 x 6
S26	QYSPSP2606N	SCREW	M2.6 x 6
S27	QYSDSP2612Z	SCREW	M2.6 x 12
S28	QYSPSPD2005Z	SCREW	M2 x 5
S29	QYSDSP2605Z	SCREW	M2.6 x 5
S31	QYSDSP3006M	SCREW	M3 x 6
S36	QYSPSPT2030M	SCREW	M2 x 3.0
S46	SC44821-001	SCREW	
S47	QYSSSP3006N	SCREW	M3 x 6
S48	QYSSSP4045N	SCREW	M4 x 45
S50	QYSDSP2004M	SCREW	M2 x 4
S54	QYSDSP4010M	SCREW	M4 x 10
W14	PRD30029-10	WASHER	
W16	QYWBS285803N	T.LOCK WASHER	CV
W17	PRD30084-09	WASHER	
W19	SC46325-001	ABSORB SPACER	
W20	SC46325-002	ABSORB SPACER	
W21	SC46325-011	ABSORB SPACER	

5-7

5.6 RIGHT SIDE COVER ASSEMBLY M6

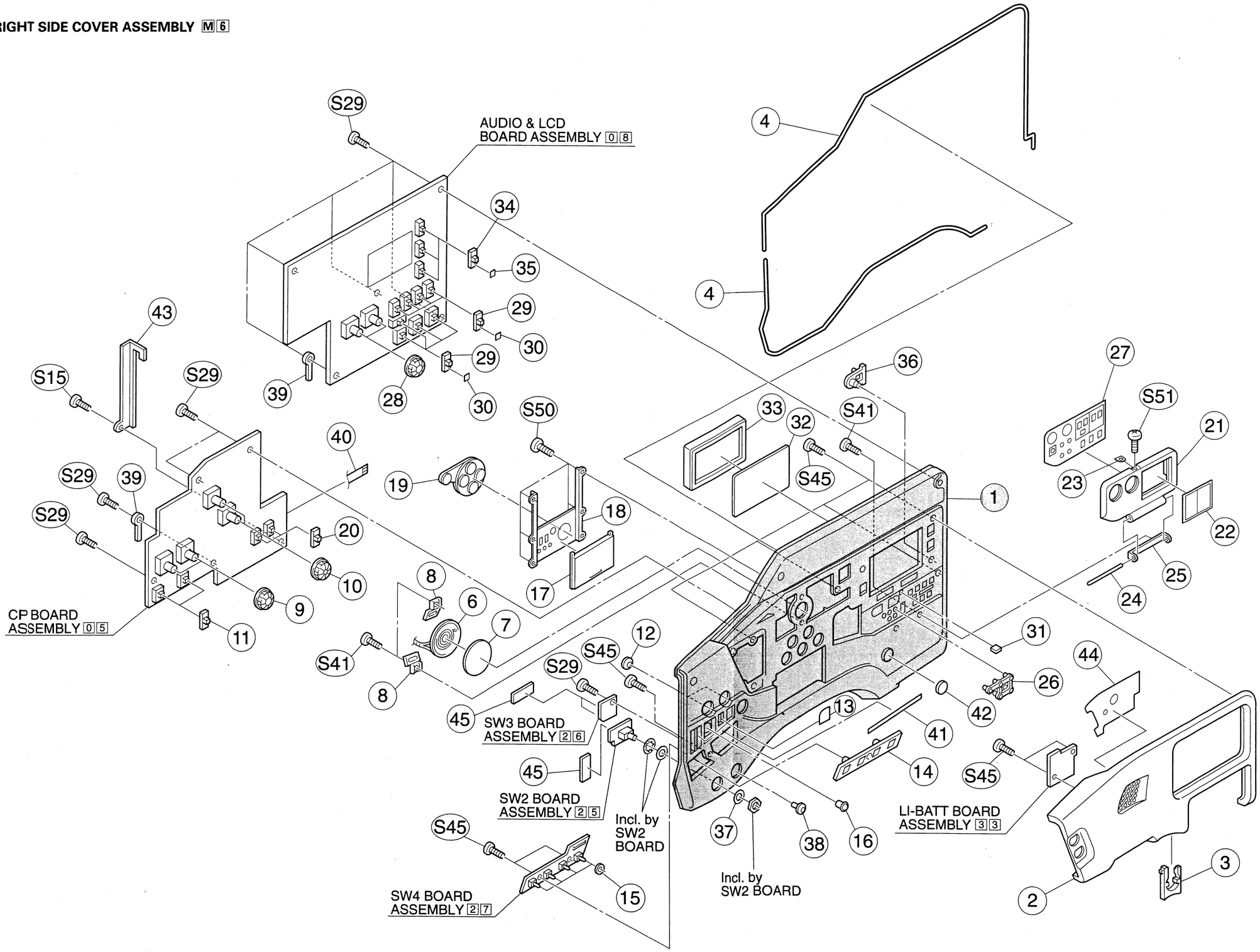

5-8

■ RIGHT SIDE COVER ASSEMBLY PARTS LIST M6

M6MM□□□□

Symbol No.	Part No.	Part Name	Description
1	SC10223-031	R.SIDE COVER	(E)
	SC10223-002	R. SIDE COVER	(U)
2	SC10224-001	CHEEK PAD	
3	SC32169-001	BATTERY HOLDER	
4	SC46410-500	GASKET	
6	SCV2903-001	SPEAKER	
7	SC46228-001	SHEET	
8	SC44537-001	SP BRACKET	
9	PRD44876-01-02	VR KNOB(2)	
10	SC46226-001	VR KNOB	
11	SC44556-002	KNOB	
12	SC45246-001	KNOB	
13	SC46399-001	LABEL	
14	SC31491-004	SW.NAME PLATE	
15	SC45264-001	RUBBER	
16	SC43451-001	LED LENS	
17	SC32166-001	SLIDE COVER	
18	SC32167-001	OPERATION PLATE	(E)
	SC32167-002	OPERATION PLATE	(U)
19	SC32168-001	OPERATION CAP	
20	SC43403-001	KNOB	
21	SC20690-002	PANEL COVER	(E)
	SC20690-003	PANEL COVER	(U)
22	SC46229-001	PANEL WINDOW	
23	SC46230-002	PANEL PLATE	
24	SC46231-001	PANEL SHAFT	
25	SC46232-001	SHAFT HOLDER	
26	SC46233-001	PANEL KNOB	
27	SC32170-002	AUDIO PANEL	(E)
	SC32170-003	AUDIO PANEL	(U)
28	SC32171-001	VOLUME KNOB	
29	PRD43835	KNOB(OPE)	
30	PRD42909-04	KNOB PLATE	
31	SC46208-002	MAGNET	
32	SC46400-001	PLATE(LCD)	
33	SC46236-002	LCD CUSHION	
34	SC45116-001	KNOB	
35	SC46397-001	KNOB PLATE	
36	SC46238-001	SELECT KNOB	
37	QYWWS629205Z	WASHER	
38	SC44828-002	SWITCH CAP	
39	PU49485-4	WIRE CLAMP	
⚠ 40	PGW0206-040100	FFC WIRE	<ALCD TO CP>
41	SC46344-002	NAME PLATE	
42	SC46357-001	CUSHION	
43	SC46334-001	CP BRACKET	
44	SC32202-001	ABSORB SHEET(R)	
45	PRD30030-162	PAD	
S15	QYSDSP2606Z	SCREW	M2.6 x 6
S29	QYSDSP2605Z	SCREW	M2.6 x 5
S41	QYSDSP2604M	SCREW	M2.6 x 4
S45	QYSDSF2606Z	SCREW	M2.6 x 6
S50	QYSDSP2004M	SCREW	M2 x 4
S51	QYSPSPT2025M	SCREW	M2 x 2.5

SECTION 6
ELECTRICAL PARTS LIST

This section only desceibes the ELECTRICAL PARTS LIST that are different from the DY-90.
On servicing, refer to the service manual (No. 9360R) for DY-90 together with this.

SAFETY PRECAUTION:
Parts identified by the ⚠ symbol are critical for safety. Replace only with specified parts numbers.
For maximum reliability and performance, all other replacement parts should be identical to those specified.

NOTE:
- Parts not denoted by parts numbers are not supplied by JVC.
- Abbreviations in this list are as follows:

RESISTORS
In the "Description" column:
All resistance values are in ohms (Ω).
k expresses kilo-ohm (1 000 ohms, kΩ).
M expresses mega-ohm (10^6 ohms, MΩ).

In the "Parts Name"column:
CAR.RESISTOR : Carbon Resistor
C.M.F.RESISTOR : Constant Metalized Film Resistor
COMP.RESISTOR: Composition Resistor
FUSI.RESISTOR : Fusible Resistor
M.F.RESISTOR : Metal Film Resistor
M.G.RESISTOR : Metal Graze Resistor
M.P.RESISTOR : Metal Plate Resistor
O.M.F.RESISTOR : Oxide Metalized Film Resistor
TRIM.RESISTOR : Trimerer Resistor
U.F.RESISTOR : Non-inflammable Resistor
VAL.RESISTOR : Valiable Resistor
W.W.RESISTOR : Wire Wound Resistor

CAPACITORS
In the "Description" column:
All capacitance values are in microfarad (μF) unless otherwise indicated.
p expresses picofarad (10^{-12} farad,pF).

In the "Parts Name" column:
CER.CAPACITOR : Ceramic Capacitor
E.CAPACITOR : Electrolytic Capacitor
FILM CAPACITOR : Film Capacitor
M.F.CAPACITOR : Metalized Film Capacitor
MICA CAPACITOR : Mica Capacitor
MPP CAPACITOR : Metalized PolyPropylene Capacitor
MPPS CAPACITOR : Metalized PolyPhenylene Sulfied film Capacitor
M.M.CAPACITOR : Metalized Mylar Capacitor
MYLAR CAPACITOR : Mylar Capacitor
N.P.CAPACITOR : Non-Poler electrolytic Capacitor
P.P.CAPACITOR : PolyPropylene Capacitor
PPS CAPACITOR : PolyPhenylene Sulfied film Capacitor
P.S.CAPACITOR : PolyStyrene Capacitor
TAN.CAPACITOR : Tantal Capacitor
TRIM.CAPACITOR : Trimer Capacitor
VAL.CAPACITOR : Valiable Capacitor

Note: In the "Description" column of the parts list, (U) means the parts for the U version while (E) is for the E version.

Symbol No.	Part No.	Part Name	Description		
IC1	SCV1585-064	I.C.(M)	JVC	(U)	← for U version
	SCV1585-067	I.C.(M)	JVC	(E)	← for E version

6.1 DR BOARD ASSEMBLY PARTS LIST [0][1]

SCK2586-01-U0A(U)

SCK2586-01-E0A(E) [0][1]□□□□□□□

Symbol No.	Part No.	Part Name	Description
IC1	CXD2422R	I.C.(M)	SONY
IC2	TLC2932IPW-X	I.C.(M)	TEXAS
IC3	UPC29L05T-X	I.C.(M)	NEC
IC4	TC7W00FU-X	I.C.(M)	TOSHIBA
IC5	UPC29L05T-X	I.C.(M)	NEC
IC6	TC74HC40103AF-X	I.C.(M)	TOSHIBA
IC7	TC74HC40103AF-X	I.C.(M)	TOSHIBA
IC8	TC7W32FU-X	I.C.(M)	TOSHIBA
IC9	TC7S08FU-X	I.C.(M)	TOSHIBA
IC10	TC4S81F-X	I.C.(M)	TOSHIBA
IC11	UPC29L05T-X	I.C.(M)	NEC
IC12	TC7S08FU-X	I.C.(M)	TOSHIBA
IC13	NJM78L20UA-X	I.C.(M)	JRC
IC14	TC7SH04FU-X	I.C.(M)	TOSHIBA
IC15	TC4S81F-X	I.C.(M)	TOSHIBA
IC50	TC4S81F-X	I.C.(M)	TOSHIBA
IC52	MB88345PF	I.C.(M)	FUJITSU
IC71	TC7SH00FU-X	I.C.(M)	TOSHIBA
IC72	TC7SH00FU-X	I.C.(M)	TOSHIBA
IC73	TC74VHC04FT-X	I.C.(M)	TOSHIBA
IC74	TC74VHC02FT-X	I.C.(M)	TOSHIBA
IC75	TC74VHC74FT-X	I.C.(M)	TOSHIBA
IC77	TC74VHC08FT-X	I.C.(M)	TOSHIBA
IC103	AD8041AR-XE	I.C.(M)	ANALOG DEVICES
IC104	LMC6082IM-X	I.C.(M)	NATIONAL SEMICO
IC203	AD8041AR-XE	I.C.(M)	ANALOG DEVICES
IC303	AD8041AR-XE	I.C.(M)	ANALOG DEVICES
IC304	LMC6082IM-X	I.C.(M)	NATIONAL SEMICO
IC401	NJM062M-X	I.C.(M)	JRC
IC402	TC4W66FU-X	I.C.(M)	TOSHIBA
IC403	NJM062M-X	I.C.(M)	JRC
IC503	NJM062M-X	I.C.(M)	JRC
IC601	NJM062M-X	I.C.(M)	JRC
IC602	TC4W66FU-X	I.C.(M)	TOSHIBA
IC603	NJM062M-X	I.C.(M)	JRC
IC604	LMC6082IM-X	I.C.(M)	NATIONAL SEMICO
IC701	NJM062M-X	I.C.(M)	JRC
IC703	UPD16510GR-X	I.C.(M)	NEC
IC803	UPD16510GR-X	I.C.(M)	NEC
IC901	NJM062M-X	I.C.(M)	JRC
IC903	UPD16510GR-X	I.C.(M)	NEC
Q1	DTA124EUA-X	TRANSISTOR	ROHM
Q2	2SB1219/QR/-X	TRANSISTOR	MATSUSHITA
Q3	2SD1820/QR/-X	TRANSISTOR	MATSUSHITA
Q51	2SC3930/BC/-X	TRANSISTOR	MATSUSHITA
Q71	DTA124EUA-X	TRANSISTOR	ROHM
Q101	2SC4081/RS/-X	TRANSISTOR	ROHM
Q102	2SC4081/RS/-X	TRANSISTOR	ROHM
Q103	2SA1532/BC/-X	TRANSISTOR	MATSUSHITA
Q104	3SK157/4-6/-W	FET	NEC
Q106	2SC4081/RS/-X	TRANSISTOR	ROHM
Q107	3SK157/4-6/-W	FET	NEC
Q108	2SC3930/BC/-X	TRANSISTOR	MATSUSHITA
Q109	3SK157/4-6/-W	FET	NEC
Q201	2SC4081/RS/-X	TRANSISTOR	ROHM
Q202	2SC4081/RS/-X	TRANSISTOR	ROHM
Q203	2SA1532/BC/-X	TRANSISTOR	MATSUSHITA
Q204	3SK157/4-6/-W	FET	NEC
Q206	2SC4081/RS/-X	TRANSISTOR	ROHM
Q207	3SK157/4-6/-W	FET	NEC
Q208	2SC3930/BC/-X	TRANSISTOR	MATSUSHITA
Q209	3SK157/4-6/-W	FET	NEC
Q301	2SC4081/RS/-X	TRANSISTOR	ROHM
Q302	2SC4081/RS/-X	TRANSISTOR	ROHM
Q303	2SA1532/BC/-X	TRANSISTOR	MATSUSHITA
Q304	3SK157/4-6/-W	FET	NEC
Q306	2SC4081/RS/-X	TRANSISTOR	ROHM
Q307	3SK157/4-6/-W	FET	NEC
Q308	2SC3930/BC/-X	TRANSISTOR	MATSUSHITA
Q309	3SK157/4-6/-W	FET	NEC

Symbol No.	Part No.	Part Name	Description	
D1	MA142A-X	DIODE	MATSUSHITA	
D403	MA742-X	DIODE	MATSUSHITA	
D503	MA742-X	DIODE	MATSUSHITA	
D603	MA742-X	DIODE	MATSUSHITA	
D604	MA742-X	DIODE	MATSUSHITA	
D702	MA142A-X	DIODE	MATSUSHITA	
D706	MA142A-X	DIODE	MATSUSHITA	
D802	MA142A-X	DIODE	MATSUSHITA	
D806	MA142A-X	DIODE	MATSUSHITA	
D902	MA142A-X	DIODE	MATSUSHITA	
D906	MA142A-X	DIODE	MATSUSHITA	
R1	NRSA63D-562X	M.G.RESISTOR	5.6k	1/16W
R2	NRSA63D-223X	M.G.RESISTOR	22k	1/16W
R3	NRSA63D-181X	M.G.RESISTOR	180	1/16W
R4	NRSA63J-0R0X	M.G.RESISTOR	0	1/16W
R6	NRSA63J-0R0X	M.G.RESISTOR	0	1/16W
R7	NRSA63J-0R0X	M.G.RESISTOR	0	1/16W
R9	NRSA63D-102X	M.G.RESISTOR	1k	1/16W
R10	NRSA63D-472X	M.G.RESISTOR	4.7k	1/16W
R11	NRSA63J-105X	M.G.RESISTOR	1M	1/16W
R13	NRSA63J-0R0X	M.G.RESISTOR	0	1/16W
R14	NRSA63D-331X	M.G.RESISTOR	330	1/16W
R15	NRSA63J-0R0X	M.G.RESISTOR	0	1/16W (E)
R17	NRSA63J-0R0X	M.G.RESISTOR	0	1/16W
R18	NRSA63D-330X	M.G.RESISTOR	33	1/16W
R19	NRSA63D-222X	M.G.RESISTOR	2.2k	1/16W
R20	NRSA63D-682X	M.G.RESISTOR	6.8k	1/16W
R21	NRSA63D-683X	M.G.RESISTOR	68k	1/16W
R22	NRSA63D-152X	M.G.RESISTOR	1.5k	1/16W
R23	NRSA63J-0R0X	M.G.RESISTOR	0	1/16W
R24	NRSA63J-0R0X	M.G.RESISTOR	0	1/16W (E)
R25	NRSA63J-0R0X	M.G.RESISTOR	0	1/16W (U)
R26	NRSA63D-221X	M.G.RESISTOR	220	1/16W
R27	NRSA63D-223X	M.G.RESISTOR	22k	1/16W
R28	NRSA63D-103X	M.G.RESISTOR	10k	1/16W
R29	NRSA63J-0R0X	M.G.RESISTOR	0	1/16W
R30	NRSA63J-0R0X	M.G.RESISTOR	0	1/16W
R31	NRSA63D-822X	M.G.RESISTOR	8.2k	1/16W
R32	NRSA63D-103X	M.G.RESISTOR	10k	1/16W
R33	NRSA63D-103X	M.G.RESISTOR	10k	1/16W
R34	NRSA63D-330X	M.G.RESISTOR	33	1/16W
R35	NRSA63J-0R0X	M.G.RESISTOR	0	1/16W
R36	NRSA63J-0R0X	M.G.RESISTOR	0	1/16W
R37	NRSA63J-0R0X	M.G.RESISTOR	0	1/16W
R53	NRSA63D-513X	M.G.RESISTOR	51k	1/16W (U)
	NRSA63D-473X	M.G.RESISTOR	47k	1/16W (E)
R54	NRSA63D-183X	M.G.RESISTOR	18k	1/16W (U)
	NRSA63D-223X	M.G.RESISTOR	22k	1/16W (E)
R55	NRSA63D-122X	M.G.RESISTOR	1.2k	1/16W
R56	NRSA63D-473X	M.G.RESISTOR	47k	1/16W
R57	NRSA63D-272X	M.G.RESISTOR	2.7k	1/16W
R58	NRSA63J-0R0X	M.G.RESISTOR	0	1/16W
R59	NRSA63D-562X	M.G.RESISTOR	5.6k	1/16W
R71	NRSA63D-154X	M.G.RESISTOR	150k	1/16W
R72	NRSA63D-124X	M.G.RESISTOR	120k	1/16W
R73	NRSA63D-331X	M.G.RESISTOR	330	1/16W
R74	NRSA63D-331X	M.G.RESISTOR	330	1/16W
R75	NRSA63D-393X	M.G.RESISTOR	39k	1/16W
R76	NRSA63D-333X	M.G.RESISTOR	33k	1/16W
R77	NRSA63D-104X	M.G.RESISTOR	100k	1/16W
R78	NRSA63D-223X	M.G.RESISTOR	22k	1/16W
R79	NRSA63D-330X	M.G.RESISTOR	33	1/16W
R80	NRSA63J-0R0X	M.G.RESISTOR	0	1/16W
R81	NRSA63J-0R0X	M.G.RESISTOR	0	1/16W
R82	NRSA63D-333X	M.G.RESISTOR	33k	1/16W
R83	NRSA63D-223X	M.G.RESISTOR	22k	1/16W
R101	NRSA63D-221X	M.G.RESISTOR	220	1/16W
R102	NRSA63D-332X	M.G.RESISTOR	3.3k	1/16W
R103	NRSA63D-221X	M.G.RESISTOR	220	1/16W
R104	NRSA63D-911X	M.G.RESISTOR	910	1/16W
R105	NRSA63D-471X	M.G.RESISTOR	470	1/16W
R107	NRSA63D-101X	M.G.RESISTOR	100	1/16W
R108	NRSA63D-182X	M.G.RESISTOR	1.8k	1/16W

[DR]

Symbol No.	Part No.	Part Name	Description	
R109	NRSA63D-472X	M.G.RESISTOR	4.7k	1/16W
R110	NRSA63D-910X	M.G.RESISTOR	91	1/16W (U)
	NRSA63D-680X	M.G.RESISTOR	68	1/16W (E)
R111	NRSA63D-101X	M.G.RESISTOR	100	1/16W
R112	NRSA63D-220X	M.G.RESISTOR	22	1/16W
R113	NRSA63D-562X	M.G.RESISTOR	5.6k	1/16W
R114	NRSA63D-270X	M.G.RESISTOR	27	1/16W
R115	NRSA63D-102X	M.G.RESISTOR	1k	1/16W
R116	NRSA63D-332X	M.G.RESISTOR	3.3k	1/16W
R117	NRSA63D-682X	M.G.RESISTOR	6.8k	1/16W
R119	NRSA63D-563X	M.G.RESISTOR	56k	1/16W
R120	NRSA63D-103X	M.G.RESISTOR	10k	1/16W
R124	NRSA63D-823X	M.G.RESISTOR	82k	1/16W
R125	NRSA63D-333X	M.G.RESISTOR	33k	1/16W
R126	NRSA63D-332X	M.G.RESISTOR	3.3k	1/16W
R127	NRSA63D-103X	M.G.RESISTOR	10k	1/16W
R201	NRSA63D-221X	M.G.RESISTOR	220	1/16W
R202	NRSA63D-332X	M.G.RESISTOR	3.3k	1/16W
R203	NRSA63D-221X	M.G.RESISTOR	220	1/16W
R204	NRSA63D-911X	M.G.RESISTOR	910	1/16W
R205	NRSA63D-471X	M.G.RESISTOR	470	1/16W
R207	NRSA63D-101X	M.G.RESISTOR	100	1/16W
R208	NRSA63D-182X	M.G.RESISTOR	1.8k	1/16W
R209	NRSA63D-472X	M.G.RESISTOR	4.7k	1/16W
R210	NRSA63D-910X	M.G.RESISTOR	91	1/16W (U)
	NRSA63D-680X	M.G.RESISTOR	68	1/16W (E)
R211	NRSA63D-101X	M.G.RESISTOR	100	1/16W
R212	NRSA63D-220X	M.G.RESISTOR	22	1/16W
R213	NRSA63D-562X	M.G.RESISTOR	5.6k	1/16W
R214	NRSA63D-270X	M.G.RESISTOR	27	1/16W
R215	NRSA63D-102X	M.G.RESISTOR	1k	1/16W
R216	NRSA63D-332X	M.G.RESISTOR	3.3k	1/16W
R217	NRSA63D-682X	M.G.RESISTOR	6.8k	1/16W
R219	NRSA63D-563X	M.G.RESISTOR	56k	1/16W
R220	NRSA63D-103X	M.G.RESISTOR	10k	1/16W
R224	NRSA63D-823X	M.G.RESISTOR	82k	1/16W
R225	NRSA63D-333X	M.G.RESISTOR	33k	1/16W
R226	NRSA63D-332X	M.G.RESISTOR	3.3k	1/16W
R227	NRSA63D-103X	M.G.RESISTOR	10k	1/16W
R301	NRSA63D-221X	M.G.RESISTOR	220	1/16W
R302	NRSA63D-332X	M.G.RESISTOR	3.3k	1/16W
R303	NRSA63D-221X	M.G.RESISTOR	220	1/16W
R304	NRSA63D-911X	M.G.RESISTOR	910	1/16W
R305	NRSA63D-471X	M.G.RESISTOR	470	1/16W
R307	NRSA63D-101X	M.G.RESISTOR	100	1/16W
R308	NRSA63D-182X	M.G.RESISTOR	1.8k	1/16W
R309	NRSA63D-472X	M.G.RESISTOR	4.7k	1/16W
R310	NRSA63D-910X	M.G.RESISTOR	91	1/16W (U)
	NRSA63D-680X	M.G.RESISTOR	68	1/16W (E)
R311	NRSA63D-101X	M.G.RESISTOR	100	1/16W
R312	NRSA63D-220X	M.G.RESISTOR	22	1/16W
R313	NRSA63D-562X	M.G.RESISTOR	5.6k	1/16W
R314	NRSA63D-270X	M.G.RESISTOR	27	1/16W
R315	NRSA63D-102X	M.G.RESISTOR	1k	1/16W
R316	NRSA63D-332X	M.G.RESISTOR	3.3k	1/16W
R317	NRSA63D-682X	M.G.RESISTOR	6.8k	1/16W
R319	NRSA63D-563X	M.G.RESISTOR	56k	1/16W
R320	NRSA63D-103X	M.G.RESISTOR	10k	1/16W
R324	NRSA63D-823X	M.G.RESISTOR	82k	1/16W
R325	NRSA63D-333X	M.G.RESISTOR	33k	1/16W
R326	NRSA63D-332X	M.G.RESISTOR	3.3k	1/16W
R327	NRSA63D-103X	M.G.RESISTOR	10k	1/16W
R402	NRSA63D-184X	M.G.RESISTOR	180k	1/16W
R403	NRSA63D-274X	M.G.RESISTOR	270k	1/16W
R404	NRSA63D-124X	M.G.RESISTOR	120k	1/16W
R406	NRSA63D-124X	M.G.RESISTOR	120k	1/16W
R407	NRSA63D-124X	M.G.RESISTOR	120k	1/16W
R408	NRSA63D-101X	M.G.RESISTOR	100	1/16W
R412	NRSA63D-183X	M.G.RESISTOR	18k	1/16W
R413	NRSA63D-274X	M.G.RESISTOR	270k	1/16W
R414	NRSA63D-363X	M.G.RESISTOR	36k	1/16W
R415	NRSA63D-102X	M.G.RESISTOR	1k	1/16W
R416	NRSA63D-104X	M.G.RESISTOR	100k	1/16W

Symbol No.	Part No.	Part Name	Description	
R417	NRSA63D-104X	M.G.RESISTOR	100k	1/16W
R418	NRSA63D-821X	M.G.RESISTOR	820	1/16W
R419	NRSA63D-821X	M.G.RESISTOR	820	1/16W
R420	NRSA63D-822X	M.G.RESISTOR	8.2k	1/16W
R421	NRSA63D-243X	M.G.RESISTOR	24k	1/16W
R422	NRSA63D-102X	M.G.RESISTOR	1k	1/16W
R423	NRSA63D-103X	M.G.RESISTOR	10k	1/16W
R424	NRSA63D-752X	M.G.RESISTOR	7.5k	1/16W
R425	NRSA63D-822X	M.G.RESISTOR	8.2k	1/16W
R426	NRSA63D-823X	M.G.RESISTOR	82k	1/16W
R427	NRSA63D-101X	M.G.RESISTOR	100	1/16W
R503	NRSA63D-274X	M.G.RESISTOR	270k	1/16W
R504	NRSA63D-124X	M.G.RESISTOR	120k	1/16W
R505	NRSA63D-334X	M.G.RESISTOR	330k	1/16W
R506	NRSA63D-124X	M.G.RESISTOR	120k	1/16W
R507	NRSA63D-334X	M.G.RESISTOR	330k	1/16W
R508	NRSA63D-101X	M.G.RESISTOR	100	1/16W
R512	NRSA63D-183X	M.G.RESISTOR	18k	1/16W
R513	NRSA63D-274X	M.G.RESISTOR	270k	1/16W
R514	NRSA63D-363X	M.G.RESISTOR	36k	1/16W
R515	NRSA63D-102X	M.G.RESISTOR	1k	1/16W
R516	NRSA63D-104X	M.G.RESISTOR	100k	1/16W
R517	NRSA63D-104X	M.G.RESISTOR	100k	1/16W
R518	NRSA63D-821X	M.G.RESISTOR	820	1/16W
R519	NRSA63D-821X	M.G.RESISTOR	820	1/16W
R520	NRSA63D-822X	M.G.RESISTOR	8.2k	1/16W
R521	NRSA63D-393X	M.G.RESISTOR	39k	1/16W
R522	NRSA63D-102X	M.G.RESISTOR	1k	1/16W
R524	NRSA63D-752X	M.G.RESISTOR	7.5k	1/16W
R525	NRSA63D-153X	M.G.RESISTOR	15k	1/16W
R526	NRSA63D-304X	M.G.RESISTOR	300k	1/16W
R527	NRSA63D-101X	M.G.RESISTOR	100	1/16W
R602	NRSA63D-224X	M.G.RESISTOR	220k	1/16W
R603	NRSA63D-274X	M.G.RESISTOR	270k	1/16W
R604	NRSA63D-124X	M.G.RESISTOR	120k	1/16W
R606	NRSA63D-124X	M.G.RESISTOR	120k	1/16W
R607	NRSA63D-124X	M.G.RESISTOR	120k	1/16W
R608	NRSA63D-101X	M.G.RESISTOR	100	1/16W
R610	NRSA63D-223X	M.G.RESISTOR	22k	1/16W
R612	NRSA63D-183X	M.G.RESISTOR	18k	1/16W
R613	NRSA63D-274X	M.G.RESISTOR	270k	1/16W
R614	NRSA63D-363X	M.G.RESISTOR	36k	1/16W
R615	NRSA63D-102X	M.G.RESISTOR	1k	1/16W
R616	NRSA63D-104X	M.G.RESISTOR	100k	1/16W
R617	NRSA63D-104X	M.G.RESISTOR	100k	1/16W
R618	NRSA63D-821X	M.G.RESISTOR	820	1/16W
R619	NRSA63D-821X	M.G.RESISTOR	820	1/16W
R620	NRSA63D-822X	M.G.RESISTOR	8.2k	1/16W
R621	NRSA63D-183X	M.G.RESISTOR	18k	1/16W
R622	NRSA63D-102X	M.G.RESISTOR	1k	1/16W
R623	NRSA63D-183X	M.G.RESISTOR	18k	1/16W
R624	NRSA63D-752X	M.G.RESISTOR	7.5k	1/16W
R625	NRSA63D-103X	M.G.RESISTOR	10k	1/16W
R626	NRSA63J-105X	M.G.RESISTOR	1M	1/16W
R627	NRSA63D-101X	M.G.RESISTOR	100	1/16W
R630	NRSA63D-183X	M.G.RESISTOR	18k	1/16W
R631	NRSA63D-274X	M.G.RESISTOR	270k	1/16W
R632	NRSA63D-104X	M.G.RESISTOR	100k	1/16W
R633	NRSA63D-363X	M.G.RESISTOR	36k	1/16W
R634	NRSA63D-683X	M.G.RESISTOR	68k	1/16W
R635	NRSA63D-102X	M.G.RESISTOR	1k	1/16W
R636	NRSA63D-223X	M.G.RESISTOR	22k	1/16W
R637	NRSA63D-391X	M.G.RESISTOR	390	1/16W
R638	NRSA63D-153X	M.G.RESISTOR	15k	1/16W
R639	NRSA63D-683X	M.G.RESISTOR	68k	1/16W
R703	NRSA63D-104X	M.G.RESISTOR	100k	1/16W
R704	NRSA63D-184X	M.G.RESISTOR	180k	1/16W
R705	NRSA63J-105X	M.G.RESISTOR	1M	1/16W
R708	NRSA63D-470X	M.G.RESISTOR	47	1/16W
R712	NRSA63D-104X	M.G.RESISTOR	100k	1/16W
R729	NRSA63J-0R0X	M.G.RESISTOR	0	1/16W
R730	NRSA63J-0R0X	M.G.RESISTOR	0	1/16W
R731	NRSA63D-683X	M.G.RESISTOR	68k	1/16W

Symbol No.	Part No.	Part Name	Description	
R732	NRSA63D-333X	M.G.RESISTOR	33k	1/16W
R733	NRSA63D-224X	M.G.RESISTOR	220k	1/16W
R803	NRSA63D-104X	M.G.RESISTOR	100k	1/16W
R804	NRSA63D-184X	M.G.RESISTOR	180k	1/16W
R805	NRSA63J-105X	M.G.RESISTOR	1M	1/16W
R808	NRSA63D-470X	M.G.RESISTOR	47	1/16W
R812	NRSA63D-104X	M.G.RESISTOR	100k	1/16W
R829	NRSA63J-0R0X	M.G.RESISTOR	0	1/16W
R830	NRSA63J-0R0X	M.G.RESISTOR	0	1/16W
R831	NRSA63D-683X	M.G.RESISTOR	68k	1/16W
R832	NRSA63D-333X	M.G.RESISTOR	33k	1/16W
R833	NRSA63D-224X	M.G.RESISTOR	220k	1/16W
R903	NRSA63D-104X	M.G.RESISTOR	100k	1/16W
R904	NRSA63D-184X	M.G.RESISTOR	180k	1/16W
R905	NRSA63J-105X	M.G.RESISTOR	1M	1/16W
R908	NRSA63D-470X	M.G.RESISTOR	47	1/16W
R912	NRSA63D-104X	M.G.RESISTOR	100k	1/16W
R929	NRSA63J-0R0X	M.G.RESISTOR	0	1/16W
R930	NRSA63J-0R0X	M.G.RESISTOR	0	1/16W
R931	NRSA63D-683X	M.G.RESISTOR	68k	1/16W
R932	NRSA63D-333X	M.G.RESISTOR	33k	1/16W
R933	NRSA63D-224X	M.G.RESISTOR	220k	1/16W
C1	NCB31CK-473X	CER.CAPACITOR	0.047	16V
C2	NEH91EM-336X	E.CAPACITOR	33	25V
C3	NBE71CM-476X	TAN.CAPACITOR	47	16V
C4	NEH71CM-337X	E.CAPACITOR	330	16V
C5	NBE51EM-106X	TAN.CAPACITOR	10	25V
C6	NCB31CK-473X	CER.CAPACITOR	0.047	16V
C7	NBE41VM-335X	TAN.CAPACITOR	3.3	35V
C8	NEH91AM-336X	E.CAPACITOR	33	10V
C9	NDC31HJ-220X	CER.CAPACITOR	22p	50V
C10	NDC31HJ-220X	CER.CAPACITOR	22p	50V
C11	NBE41CM-106X	TAN.CAPACITOR	10	16V
C12	NCB31CK-473X	CER.CAPACITOR	0.047	16V
C13	NDC31HJ-390X	CER.CAPACITOR	39p	50V
C14	NBE41CM-106X	TAN.CAPACITOR	10	16V
C15	NCB31CK-473X	CER.CAPACITOR	0.047	16V
C16	NCB31CK-473X	CER.CAPACITOR	0.047	16V
C17	NCB31CK-473X	CER.CAPACITOR	0.047	16V
C18	NCB31CK-473X	CER.CAPACITOR	0.047	16V
C19	NBE41CM-106X	TAN.CAPACITOR	10	16V
C20	NCB31CK-473X	CER.CAPACITOR	0.047	16V
C21	NBE21EM-105X	TAN.CAPACITOR	1	25V
C22	NCB31CK-473X	CER.CAPACITOR	0.047	16V
C23	NCB31CK-473X	CER.CAPACITOR	0.047	16V
C24	NCB21CK-224X	CER.CAPACITOR	0.22	16V
C25	NCB21CK-224X	CER.CAPACITOR	0.22	16V
C26	NBE41CM-106X	TAN.CAPACITOR	10	16V
C27	NCB31CK-473X	CER.CAPACITOR	0.047	16V
C28	NCB31CK-473X	CER.CAPACITOR	0.047	16V
C29	NCB31CK-473X	CER.CAPACITOR	0.047	16V
C30	NCB31CK-473X	CER.CAPACITOR	0.047	16V
C31	NEH91CM-476X	E.CAPACITOR	47	16V
C32	NBE21EM-105X	TAN.CAPACITOR	1	25V
C33	NEH71AM-227X	E.CAPACITOR	220	10V
C34	NCB31CK-473X	CER.CAPACITOR	0.047	16V
C35	NEH91HM-105X	E.CAPACITOR	1	50V
C36	NBE41VM-335X	TAN.CAPACITOR	3.3	35V
C37	NCB31CK-473X	CER.CAPACITOR	0.047	16V
C38	NBE21EM-105X	TAN.CAPACITOR	1	25V
C39	NEH91CM-476X	E.CAPACITOR	47	16V
C40	NCB31CK-473X	CER.CAPACITOR	0.047	16V
C41	NCB31CK-473X	CER.CAPACITOR	0.047	16V
C42	NCB31CK-473X	CER.CAPACITOR	0.047	16V
C43	NCB31HK-103X	CER.CAPACITOR	0.01	50V (U)
C52	NCB31CK-473X	CER.CAPACITOR	0.047	16V
C53	NCB31CK-473X	CER.CAPACITOR	0.047	16V
C54	NCB31CK-473X	CER.CAPACITOR	0.047	16V
C55	NBE21EM-105X	TAN.CAPACITOR	1	25V
C56	NCB31CK-473X	CER.CAPACITOR	0.047	16V
C58	NCB31CK-473X	CER.CAPACITOR	0.047	16V
C59	NCB31CK-473X	CER.CAPACITOR	0.047	16V

Symbol No.	Part No.	Part Name	Description	
C60	NDC31HJ-680X	CER.CAPACITOR	68p	50V
C71	NCB31CK-473X	CER.CAPACITOR	0.047	16V
C72	NCB31CK-473X	CER.CAPACITOR	0.047	16V
C73	NBE41VM-335X	TAN.CAPACITOR	3.3	35V
C74	NBE41CM-106X	TAN.CAPACITOR	10	16V
C75	NDC31HJ-220X	CER.CAPACITOR	22p	50V
C76	NBE41CM-106X	TAN.CAPACITOR	10	16V
C77	NDC31HJ-220X	CER.CAPACITOR	22p	50V
C78	NBE51EM-106X	TAN.CAPACITOR	10	25V
C80	NBE41CM-106X	TAN.CAPACITOR	10	16V
C81	NBE41CM-106X	TAN.CAPACITOR	10	16V
C82	NCB31CK-473X	CER.CAPACITOR	0.047	16V
C84	NCB31CK-473X	CER.CAPACITOR	0.047	16V
C104	NDC31HJ-560X	CER.CAPACITOR	56p	50V
C105	NCB31CK-473X	CER.CAPACITOR	0.047	16V
C106	NCB31CK-473X	CER.CAPACITOR	0.047	16V
C109	NCB31CK-104X	CER.CAPACITOR	0.1	16V
C111	NCB31CK-473X	CER.CAPACITOR	0.047	16V
C113	NCB31CK-473X	CER.CAPACITOR	0.047	16V
C114	NCB31CK-473X	CER.CAPACITOR	0.047	16V
C120	NDC31HJ-560X	CER.CAPACITOR	56p	50V
C121	NDC31HJ-150X	CER.CAPACITOR	15p	50V
C123	NCB31HK-222X	CER.CAPACITOR	2200p	50V (U)
C204	NDC31HJ-560X	CER.CAPACITOR	56p	50V
C205	NCB31CK-473X	CER.CAPACITOR	0.047	16V
C206	NCB31CK-473X	CER.CAPACITOR	0.047	16V
C209	NCB31CK-104X	CER.CAPACITOR	0.1	16V
C211	NCB31CK-473X	CER.CAPACITOR	0.047	16V
C220	NDC31HJ-560X	CER.CAPACITOR	56p	50V
C221	NDC31HJ-150X	CER.CAPACITOR	15p	50V
C223	NCB31HK-222X	CER.CAPACITOR	2200p	50V (U)
C304	NDC31HJ-560X	CER.CAPACITOR	56p	50V
C305	NCB31CK-473X	CER.CAPACITOR	0.047	16V
C306	NCB31CK-473X	CER.CAPACITOR	0.047	16V
C309	NCB31CK-104X	CER.CAPACITOR	0.1	16V
C311	NCB31CK-473X	CER.CAPACITOR	0.047	16V
C313	NCB31CK-473X	CER.CAPACITOR	0.047	16V
C314	NCB31CK-473X	CER.CAPACITOR	0.047	16V
C320	NDC31HJ-560X	CER.CAPACITOR	56p	50V
C321	NDC31HJ-150X	CER.CAPACITOR	15p	50V
C323	NCB31HK-222X	CER.CAPACITOR	2200p	50V (U)
C401	NCB31EK-103X	CER.CAPACITOR	0.01	25V
C403	NCB31CK-473X	CER.CAPACITOR	0.047	16V
C404	NCB31CK-104X	CER.CAPACITOR	0.1	16V
C501	NCB31EK-103X	CER.CAPACITOR	0.01	25V
C503	NCB31CK-473X	CER.CAPACITOR	0.047	16V
C504	NCB31CK-104X	CER.CAPACITOR	0.1	16V
C601	NCB31EK-103X	CER.CAPACITOR	0.01	25V
C603	NCB31CK-473X	CER.CAPACITOR	0.047	16V
C604	NCB31CK-104X	CER.CAPACITOR	0.1	16V
C605	NCB31CK-473X	CER.CAPACITOR	0.047	16V
C606	NCB31CK-473X	CER.CAPACITOR	0.047	16V
C607	NCB31CK-473X	CER.CAPACITOR	0.047	16V
C608	NCB11CK-105X	CER.CAPACITOR	1	16V
C704	NCB31CK-473X	CER.CAPACITOR	0.047	16V
C705	NBE21EM-105X	TAN.CAPACITOR	1	25V
C706	NEH91HM-105X	E.CAPACITOR	1	50V
C707	NCB31CK-473X	CER.CAPACITOR	0.047	16V
C710	NBE41CM-106X	TAN.CAPACITOR	10	16V
C711	NCB31CK-473X	CER.CAPACITOR	0.047	16V
C712	NCB31CK-473X	CER.CAPACITOR	0.047	16V
C713	NCB31CK-473X	CER.CAPACITOR	0.047	16V
C714	NBE41VM-335X	TAN.CAPACITOR	3.3	35V
C715	NCB31CK-473X	CER.CAPACITOR	0.047	16V
C716	NCB31CK-473X	CER.CAPACITOR	0.047	16V
C804	NCB31CK-473X	CER.CAPACITOR	0.047	16V
C805	NBE21EM-105X	TAN.CAPACITOR	1	25V
C806	NEH91HM-105X	E.CAPACITOR	1	50V
C807	NCB31CK-473X	CER.CAPACITOR	0.047	16V
C810	NBE41CM-106X	TAN.CAPACITOR	10	16V
C811	NCB31CK-473X	CER.CAPACITOR	0.047	16V
C812	NCB31CK-473X	CER.CAPACITOR	0.047	16V
C814	NBE41VM-335X	TAN.CAPACITOR	3.3	35V

[DR]

Symbol No.	Part No.	Part Name	Description
C816	NCB31CK-473X	CER.CAPACITOR	0.047 16V
C904	NCB31CK-473X	CER.CAPACITOR	0.047 16V
C905	NBE21EM-105X	TAN.CAPACITOR	1 25V
C906	NEH91HM-105X	E.CAPACITOR	1 50V
C907	NCB31CK-473X	CER.CAPACITOR	0.047 16V
C910	NBE41CM-106X	TAN.CAPACITOR	10 16V
C911	NCB31CK-473X	CER.CAPACITOR	0.047 16V
C912	NCB31CK-473X	CER.CAPACITOR	0.047 16V
C914	NBE41VM-335X	TAN.CAPACITOR	3.3 35V
C916	NCB31CK-473X	CER.CAPACITOR	0.047 16V
LC1	EXC-CET471U	LC FILTER	
LC2	EXC-CET471U	LC FILTER	
LC4	EXC-CET471U	LC FILTER	
LC73	EXC-CET471U	LC FILTER	
LC701	EXC-CET471U	LC FILTER	
LC702	SCV1804-222Z	LC FILTER	
LC801	EXC-CET471U	LC FILTER	
LC802	SCV1804-222Z	LC FILTER	
LC901	EXC-CET471U	LC FILTER	
LC902	SCV1804-222Z	LC FILTER	
CN1	QGA1201C2-06X	CONNECTOR	6PIN
CN2	QGA1201C2-10X	CONNECTOR	10PIN
CN3	QGF0508F1-30X	CONNECTOR	30PIN
CN4	QGF0508F2-30X	CONNECTOR	30PIN
CN5	QGF0508F2-30X	CONNECTOR	30PIN
CN6	QGA1201C2-13X	CONNECTOR	13PIN
FL101	NQR0122-001X	FL FILTER	
FL201	NQR0122-001X	FL FILTER	
FL301	NQR0122-001X	FL FILTER	
K1	NQR0292-001X	FERRITE BEADS	
K2	SCV2662-027	FERRITE BEADS	
K3	SCV2662-027	FERRITE BEADS	
K4	SCV2662-027	FERRITE BEADS	
K6	SCV2662-027	FERRITE BEADS	
K7	SCV2662-027	FERRITE BEADS	
K8	SCV2662-027	FERRITE BEADS	
K9	SCV2662-027	FERRITE BEADS	
K10	NQR0292-001X	FERRITE BEADS	
K115	NQR0265-001X	FERRITE BEADS	
K116	NQR0265-001X	FERRITE BEADS	
K215	NQR0265-001X	FERRITE BEADS	
K216	NQR0265-001X	FERRITE BEADS	
K315	NQR0265-001X	FERRITE BEADS	
K316	NQR0265-001X	FERRITE BEADS	
K701	SCV2662-027	FERRITE BEADS	
K702	NQR0292-001X	FERRITE BEADS	
K703	SCV2662-027	FERRITE BEADS	
K704	SCV2662-027	FERRITE BEADS	
K705	SCV2662-027	FERRITE BEADS	
K706	SCV2662-027	FERRITE BEADS	
K801	SCV2662-027	FERRITE BEADS	
K802	NQR0292-001X	FERRITE BEADS	
K803	SCV2662-027	FERRITE BEADS	
K804	SCV2662-027	FERRITE BEADS	
K805	SCV2662-027	FERRITE BEADS	
K806	SCV2662-027	FERRITE BEADS	
K901	SCV2662-027	FERRITE BEADS	
K902	NQR0292-001X	FERRITE BEADS	
K903	SCV2662-027	FERRITE BEADS	
K904	SCV2662-027	FERRITE BEADS	
K905	SCV2662-027	FERRITE BEADS	
K906	SCV2662-027	FERRITE BEADS	

6.2 ISB BOARD ASSEMBLY PARTS LIST 02

SSCK2546-01-00A 02□□□□□□□

Symbol No.	Part No.	Part Name	Description
SK1	QNV0031-010	IC SOCKET	for IC1
IC2	AD8011AR-X	I.C.(M)	ANALOG DEVICES
IC3	OPA655U-XE	I.C.(M)	BURR-BROWN
IC4	AD603AR-X	I.C.(M)	ANALOG DEVICES
IC5	LMC6082IM-X	I.C.(M)	NATIONAL SEMICO
IC6	TC4S66F-X	I.C.(M)	TOSHIBA
IC7	TC74AC04P	I.C.(M)	TOSHIBA
Q1	2SA1226T2B	TRANSISTOR	NEC
Q2	3SK157/4-6/-W	FET	NEC
Q3	3SK157/4-6/-W	FET	NEC
Q4	3SK157/4-6/-W	FET	NEC
Q5	3SK157/4-6/-W	FET	NEC
Q6	2SJ364/QR/-X	FET	MATSUSHITA
Q7	MSC3930/B/-X	TRANSISTOR	MOTOROLA
D1	HSM198S-W	DIODE	HITACHI
D2	MA142WA-X	DIODE	MATSUSHITA
R1	NRSA63D-224X	M.G.RESISTOR	220k 1/16W
R2	NRSA63D-152X	M.G.RESISTOR	1.5k 1/16W
R3	NRSA63D-102X	M.G.RESISTOR	1k 1/16W
R4	NRSA63D-331X	M.G.RESISTOR	330 1/16W
R5	NRSA63D-181X	M.G.RESISTOR	180 1/16W
R6	NRSA63D-220X	M.G.RESISTOR	22 1/16W
R7	NRSA63D-181X	M.G.RESISTOR	180 1/16W
R8	NRSA63D-101X	M.G.RESISTOR	100 1/16W
R10	NRSA63D-101X	M.G.RESISTOR	100 1/16W
R11	NRSA63D-332X	M.G.RESISTOR	3.3k 1/16W
R12	NRSA63D-122X	M.G.RESISTOR	1.2k 1/16W
R13	NRSA63D-822X	M.G.RESISTOR	8.2k 1/16W
R14	NRSA63D-102X	M.G.RESISTOR	1k 1/16W
R15	NRSA63D-105X	M.G.RESISTOR	1M 1/16W
R16	NRSA63D-101X	M.G.RESISTOR	100 1/16W
R18	NRSA63D-105X	M.G.RESISTOR	1M 1/16W
R19	NRSA63D-105X	M.G.RESISTOR	1M 1/16W
R23	NRSA63D-563X	M.G.RESISTOR	56k 1/16W
R24	NRSA63D-101X	M.G.RESISTOR	100 1/16W
R25	NRSA63D-102X	M.G.RESISTOR	1k 1/16W
R26	NRSA63D-104X	M.G.RESISTOR	100k 1/16W
R27	NRSA63D-104X	M.G.RESISTOR	100k 1/16W
R28	NRSA63D-104X	M.G.RESISTOR	100k 1/16W
R29	NRSA63D-104X	M.G.RESISTOR	100k 1/16W
R30	NRSA63D-100X	M.G.RESISTOR	10 1/16W
R31	NRSA63D-100X	M.G.RESISTOR	10 1/16W
R32	NRSA63D-103X	M.G.RESISTOR	10k 1/16W
R33	NRSA63D-563X	M.G.RESISTOR	56k 1/16W
R34	NRSA63D-751X	M.G.RESISTOR	750 1/16W
R35	NRSA63D-105X	M.G.RESISTOR	1M 1/16W
R36	NRSA63D-470X	M.G.RESISTOR	47 1/16W
R38	NRSA63D-333X	M.G.RESISTOR	33k 1/16W
R45	NRSA63D-563X	M.G.RESISTOR	56k 1/16W
C1	NCB31CK-473X	CER.CAPACITOR	0.047 16V
C2	NDC31HJ-470X	CER.CAPACITOR	47p 50V
C3	NBE21AM-106X	TAN.CAPACITOR	10 10V
C4	NBE21EM-105X	TAN.CAPACITOR	1 25V
C5	NDC31HJ-150X	CER.CAPACITOR	15p 50V
C6	NDC31HJ-150X	CER.CAPACITOR	15p 50V
C7	NBE21AM-106X	TAN.CAPACITOR	10 10V
C8	NBE21AM-106X	TAN.CAPACITOR	10 10V
C9	NDC31HJ-820X	CER.CAPACITOR	82p 50V
C10	NBE21AM-106X	TAN.CAPACITOR	10 10V
C11	NBE21AM-106X	TAN.CAPACITOR	10 10V
C12	NDC31HJ-100X	CER.CAPACITOR	10p 50V
C13	NDC31HJ-470X	CER.CAPACITOR	47p 50V
C14	NDC31HJ-330X	CER.CAPACITOR	33p 50V
C15	NCB31CK-473X	CER.CAPACITOR	0.047 16V
C16	NCB31CK-473X	CER.CAPACITOR	0.047 16V
C18	NCB31CK-473X	CER.CAPACITOR	0.047 16V

6.3 ISG BOARD ASSEMBLY PARTS LIST 0 3

SCK2546-02-00A 0 3

Symbol No.	Part No.	Part Name	Description	
C19	NCB31CK-473X	CER.CAPACITOR	0.047	16V
C20	NCB31CK-473X	CER.CAPACITOR	0.047	16V
C21	NCB31CK-473X	CER.CAPACITOR	0.047	16V
C22	NCB31CK-473X	CER.CAPACITOR	0.047	16V
C23	NCB31CK-473X	CER.CAPACITOR	0.047	16V
C24	NBE21CM-475X	TAN.CAPACITOR	4.7	16V
C25	NFV41CJ-104X	FILM CAPACITOR	0.1	16V
C26	NFV41CJ-104X	FILM CAPACITOR	0.1	16V
C27	NDC31HJ-100X	CER.CAPACITOR	10p	50V
C28	NCB31CK-473X	CER.CAPACITOR	0.047	16V
C29	NCB31CK-473X	CER.CAPACITOR	0.047	16V
C30	NBE21AM-106X	TAN.CAPACITOR	10	10V
C31	NBE41VM-335X	TAN.CAPACITOR	3.3	35V
C32	NBE21AM-106X	TAN.CAPACITOR	10	10V
C33	NBE21EM-105X	TAN.CAPACITOR	1	25V
C34	NBE41VM-335X	TAN.CAPACITOR	3.3	35V
C35	NCB31HK-153X	CER.CAPACITOR	0.015	50V
C36	NBE21AM-106X	TAN.CAPACITOR	10	10V
C37	NCB31CK-473X	CER.CAPACITOR	0.047	16V
C38	NBE21AM-106X	TAN.CAPACITOR	10	10V
C39	NCB31CK-473X	CER.CAPACITOR	0.047	16V
C40	NCB31EK-223X	CER.CAPACITOR	0.022	25V
C41	QEXA1AM-227	E.CAPACITOR	220	10V
C42	NCB31CK-473X	CER.CAPACITOR	0.047	16V
C43	NCB31CK-473X	CER.CAPACITOR	0.047	16V
C44	NBE41VM-335X	TAN.CAPACITOR	3.3	35V
LC1	SCV1804-222Z	LC FILTER		
LC2	SCV1804-222Z	LC FILTER		
LC3	SCV1804-222Z	LC FILTER		
LC4	SCV1804-222Z	LC FILTER		
CN3	QGF0503F3-30X	CONNECTOR	30PIN	
FL1	NQR0122-001X	FL FILTER		
K1	NRS181J-0R0X	M.G.RESISTOR	0	1/8W

Symbol No.	Part No.	Part Name	Description	
SK1	QNV0031-010	IC SOCKET	for IC1	
IC2	AD8011AR-X	I.C.(M)	ANALOG DEVICES	
IC3	OPA655U-XE	I.C.(M)	BURR-BROWN	
IC4	AD603AR-X	I.C.(M)	ANALOG DEVICES	
IC5	LMC6082IM-X	I.C.(M)	NATIONAL SEMICO	
IC6	TC4S66F-X	I.C.(M)	TOSHIBA	
IC7	TC74AC04P	I.C.(M)	TOSHIBA	
Q1	2SA1226T2B	TRANSISTOR	NEC	
Q2	3SK157/4-6/-W	FET	NEC	
Q3	3SK157/4-6/-W	FET	NEC	
Q4	3SK157/4-6/-W	FET	NEC	
Q5	3SK157/4-6/-W	FET	NEC	
Q6	2SJ364/QR/-X	FET	MATSUSHITA	
Q7	MSC3930/B/-X	TRANSISTOR	MOTOROLA	
D1	HSM198S-W	DIODE	HITACHI	
D2	MA142WA-X	DIODE	MATSUSHITA	
R1	NRSA63D-224X	M.G.RESISTOR	220k	1/16W
R2	NRSA63D-152X	M.G.RESISTOR	1.5k	1/16W
R3	NRSA63D-102X	M.G.RESISTOR	1k	1/16W
R4	NRSA63D-391X	M.G.RESISTOR	390	1/16W
R5	NRSA63D-181X	M.G.RESISTOR	180	1/16W
R6	NRSA63D-220X	M.G.RESISTOR	22	1/16W
R7	NRSA63D-181X	M.G.RESISTOR	180	1/16W
R8	NRSA63D-101X	M.G.RESISTOR	100	1/16W
R9	NRSA63D-222X	M.G.RESISTOR	2.2k	1/16W
R10	NRSA63D-101X	M.G.RESISTOR	100	1/16W
R11	NRSA63D-332X	M.G.RESISTOR	3.3k	1/16W
R12	NRSA63D-122X	M.G.RESISTOR	1.2k	1/16W
R13	NRSA63D-152X	M.G.RESISTOR	1.5k	1/16W
R14	NRSA63J-0R0X	M.G.RESISTOR	0	1/16W
R15	NRSA63D-105X	M.G.RESISTOR	1M	1/16W
R16	NRSA63D-101X	M.G.RESISTOR	100	1/16W
R18	NRSA63D-105X	M.G.RESISTOR	1M	1/16W
R19	NRSA63D-105X	M.G.RESISTOR	1M	1/16W
R23	NRSA63D-563X	M.G.RESISTOR	56k	1/16W
R24	NRSA63D-101X	M.G.RESISTOR	100	1/16W
R25	NRSA63D-102X	M.G.RESISTOR	1k	1/16W
R26	NRSA63D-104X	M.G.RESISTOR	100k	1/16W
R27	NRSA63D-104X	M.G.RESISTOR	100k	1/16W
R28	NRSA63D-104X	M.G.RESISTOR	100k	1/16W
R29	NRSA63D-104X	M.G.RESISTOR	100k	1/16W
R30	NRSA63D-100X	M.G.RESISTOR	10	1/16W
R31	NRSA63D-100X	M.G.RESISTOR	10	1/16W
R32	NRSA63D-103X	M.G.RESISTOR	10k	1/16W
R33	NRSA63D-563X	M.G.RESISTOR	56k	1/16W
R34	NRSA63D-751X	M.G.RESISTOR	750	1/16W
R35	NRSA63D-105X	M.G.RESISTOR	1M	1/16W
R36	NRSA63D-470X	M.G.RESISTOR	47	1/16W
R38	NRSA63D-333X	M.G.RESISTOR	33k	1/16W
R45	NRSA63D-563X	M.G.RESISTOR	56k	1/16W
C1	NCB31CK-473X	CER.CAPACITOR	0.047	16V
C2	NDC31HJ-470X	CER.CAPACITOR	47p	50V
C3	NBE21AM-106X	TAN.CAPACITOR	10	10V
C4	NBE21EM-105X	TAN.CAPACITOR	1	25V
C5	NDC31HJ-150X	CER.CAPACITOR	15p	50V
C6	NDC31HJ-150X	CER.CAPACITOR	15p	50V
C7	NBE21AM-106X	TAN.CAPACITOR	10	10V
C8	NBE21AM-106X	TAN.CAPACITOR	10	10V
C9	NDC31HJ-820X	CER.CAPACITOR	82p	50V
C10	NBE21AM-106X	TAN.CAPACITOR	10	10V
C11	NBE21AM-106X	TAN.CAPACITOR	10	10V
C13	NDC31HJ-470X	CER.CAPACITOR	47p	50V
C14	NDC31HJ-330X	CER.CAPACITOR	33p	50V
C15	NCB31CK-473X	CER.CAPACITOR	0.047	16V
C16	NCB31CK-473X	CER.CAPACITOR	0.047	16V
C18	NCB31CK-473X	CER.CAPACITOR	0.047	16V

[ISG]

Symbol No.	Part No.	Part Name	Description	
C19	NCB31CK-473X	CER.CAPACITOR	0.047	16V
C20	NCB31CK-473X	CER.CAPACITOR	0.047	16V
C21	NCB31CK-473X	CER.CAPACITOR	0.047	16V
C22	NCB31CK-473X	CER.CAPACITOR	0.047	16V
C23	NCB31CK-473X	CER.CAPACITOR	0.047	16V
C24	NBE21CM-475X	TAN.CAPACITOR	4.7	16V
C25	NFV41CJ-104X	FILM CAPACITOR	0.1	16V
C26	NFV41CJ-104X	FILM CAPACITOR	0.1	16V
C27	NDC31HJ-100X	CER.CAPACITOR	10p	50V
C28	NCB31CK-473X	CER.CAPACITOR	0.047	16V
C29	NCB31CK-473X	CER.CAPACITOR	0.047	16V
C30	NBE21AM-106X	TAN.CAPACITOR	10	10V
C31	NBE41VM-335X	TAN.CAPACITOR	3.3	35V
C32	NBE21AM-106X	TAN.CAPACITOR	10	10V
C33	NBE21EM-105X	TAN.CAPACITOR	1	25V
C34	NBE41VM-335X	TAN.CAPACITOR	3.3	35V
C35	NCB31HK-153X	CER.CAPACITOR	0.015	50V
C36	NBE21AM-106X	TAN.CAPACITOR	10	10V
C37	NCB31CK-473X	CER.CAPACITOR	0.047	16V
C38	NBE21AM-106X	TAN.CAPACITOR	10	10V
C39	NCB31CK-473X	CER.CAPACITOR	0.047	16V
C40	NCB31EK-223X	CER.CAPACITOR	0.022	25V
C41	QEXA1AM-686	E.CAPACITOR	68	10V
C42	NCB31CK-473X	CER.CAPACITOR	0.047	16V
C43	NCB31CK-473X	CER.CAPACITOR	0.047	16V
C44	NBE41VM-335X	TAN.CAPACITOR	3.3	35V
LC1	SCV1804-222Z	LC FILTER		
LC2	SCV1804-222Z	LC FILTER		
LC3	SCV1804-222Z	LC FILTER		
LC4	SCV1804-222Z	LC FILTER		
CN4	QGF0503F3-30X	CONNECTOR	30PIN	
FL1	NQR0122-001X	FL FILTER		
K1	NRS181J-0R0X	M.G.RESISTOR	0	1/8W

6.4 ISR BOARD ASSEMBLY PARTS LIST [0][4]

SCK2546-03-00A [0][4]□□□□□□□

Symbol No.	Part No.	Part Name	Description	
SK1	QNV0031-010	IC SOCKET	for IC1	
IC2	AD8011AR-X	I.C.(M)	ANALOG DEVICES	
IC3	OPA655U-XE	I.C.(M)	BURR-BROWN	
IC4	AD603AR-X	I.C.(M)	ANALOG DEVICES	
IC5	LMC6082IM-X	I.C.(M)	NATIONAL SEMICO	
IC6	TC4S66F-X	I.C.(M)	TOSHIBA	
IC7	TC74AC04P	I.C.(M)	TOSHIBA	
Q1	2SA1226T2B	TRANSISTOR	NEC	
Q2	3SK157/4-6/-W	FET	NEC	
Q3	3SK157/4-6/-W	FET	NEC	
Q4	3SK157/4-6/-W	FET	NEC	
Q5	3SK157/4-6/-W	FET	NEC	
Q6	2SJ364/QR/-X	FET	MATSUSHITA	
Q7	MSC3930/B/-X	TRANSISTOR	MOTOROLA	
D1	HSM198S-W	DIODE	HITACHI	
D2	MA142WA-X	DIODE	MATSUSHITA	
R1	NRSA63D-224X	M.G.RESISTOR	220k	1/16W
R2	NRSA63D-152X	M.G.RESISTOR	1.5k	1/16W
R3	NRSA63D-102X	M.G.RESISTOR	1k	1/16W
R4	NRSA63D-391X	M.G.RESISTOR	390	1/16W
R5	NRSA63D-181X	M.G.RESISTOR	180	1/16W
R6	NRSA63D-220X	M.G.RESISTOR	22	1/16W
R7	NRSA63D-181X	M.G.RESISTOR	180	1/16W
R8	NRSA63D-101X	M.G.RESISTOR	100	1/16W
R10	NRSA63D-101X	M.G.RESISTOR	100	1/16W
R11	NRSA63D-332X	M.G.RESISTOR	3.3k	1/16W
R12	NRSA63D-122X	M.G.RESISTOR	1.2k	1/16W
R13	NRSA63D-222X	M.G.RESISTOR	2.2k	1/16W
R14	NRSA63D-151X	M.G.RESISTOR	150	1/16W
R15	NRSA63D-105X	M.G.RESISTOR	1M	1/16W
R16	NRSA63D-101X	M.G.RESISTOR	100	1/16W
R18	NRSA63D-105X	M.G.RESISTOR	1M	1/16W
R19	NRSA63D-105X	M.G.RESISTOR	1M	1/16W
R23	NRSA63D-563X	M.G.RESISTOR	56k	1/16W
R24	NRSA63D-101X	M.G.RESISTOR	100	1/16W
R25	NRSA63D-102X	M.G.RESISTOR	1k	1/16W
R26	NRSA63D-104X	M.G.RESISTOR	100k	1/16W
R27	NRSA63D-104X	M.G.RESISTOR	100k	1/16W
R28	NRSA63D-104X	M.G.RESISTOR	100k	1/16W
R29	NRSA63D-104X	M.G.RESISTOR	100k	1/16W
R30	NRSA63D-100X	M.G.RESISTOR	10	1/16W
R31	NRSA63D-100X	M.G.RESISTOR	10	1/16W
R32	NRSA63D-103X	M.G.RESISTOR	10k	1/16W
R33	NRSA63D-563X	M.G.RESISTOR	56k	1/16W
R34	NRSA63D-751X	M.G.RESISTOR	750	1/16W
R35	NRSA63D-105X	M.G.RESISTOR	1M	1/16W
R36	NRSA63D-470X	M.G.RESISTOR	47	1/16W
R38	NRSA63D-333X	M.G.RESISTOR	33k	1/16W
R45	NRSA63D-563X	M.G.RESISTOR	56k	1/16W
C1	NCB31CK-473X	CER.CAPACITOR	0.047	16V
C2	NDC31HJ-470X	CER.CAPACITOR	47p	50V
C3	NBE21AM-106X	TAN.CAPACITOR	10	10V
C4	NBE21EM-105X	TAN.CAPACITOR	1	25V
C5	NDC31HJ-150X	CER.CAPACITOR	15p	50V
C6	NDC31HJ-150X	CER.CAPACITOR	15p	50V
C7	NBE21AM-106X	TAN.CAPACITOR	10	10V
C8	NBE21AM-106X	TAN.CAPACITOR	10	10V
C9	NDC31HJ-820X	CER.CAPACITOR	82p	50V
C10	NBE21AM-106X	TAN.CAPACITOR	10	10V
C11	NBE21AM-106X	TAN.CAPACITOR	10	10V
C12	NDC31HJ-151X	CER.CAPACITOR	150p	50V
C13	NDC31HJ-470X	CER.CAPACITOR	47p	50V
C14	NDC31HJ-330X	CER.CAPACITOR	33p	50V
C15	NCB31CK-473X	CER.CAPACITOR	0.047	16V
C16	NCB31CK-473X	CER.CAPACITOR	0.047	16V
C18	NCB31CK-473X	CER.CAPACITOR	0.047	16V

6.5 CP BOARD ASSEMBLY PARTS LIST 05

SCK2611-01-U0A(U)

SCK2611-01-E0A(E) 05□□□□□□□

Symbol No.	Part No.	Part Name	Description	
C19	NCB31CK-473X	CER.CAPACITOR	0.047	16V
C20	NCB31CK-473X	CER.CAPACITOR	0.047	16V
C21	NCB31CK-473X	CER.CAPACITOR	0.047	16V
C22	NCB31CK-473X	CER.CAPACITOR	0.047	16V
C23	NCB31CK-473X	CER.CAPACITOR	0.047	16V
C24	NBE21CM-475X	TAN.CAPACITOR	4.7	16V
C25	NFV41CJ-104X	FILM CAPACITOR	0.1	16V
C26	NFV41CJ-104X	FILM CAPACITOR	0.1	16V
C27	NDC31HJ-100X	CER.CAPACITOR	10p	50V
C28	NCB31CK-473X	CER.CAPACITOR	0.047	16V
C29	NCB31CK-473X	CER.CAPACITOR	0.047	16V
C30	NBE21AM-106X	TAN.CAPACITOR	10	10V
C31	NBE41VM-335X	TAN.CAPACITOR	3.3	35V
C32	NBE21AM-106X	TAN.CAPACITOR	10	10V
C33	NBE21EM-105X	TAN.CAPACITOR	1	25V
C34	NBE41VM-335X	TAN.CAPACITOR	3.3	35V
C35	NCB31HK-153X	CER.CAPACITOR	0.015	50V
C36	NBE21AM-106X	TAN.CAPACITOR	10	10V
C37	NCB31CK-473X	CER.CAPACITOR	0.047	16V
C38	NBE21AM-106X	TAN.CAPACITOR	10	10V
C39	NCB31CK-473X	CER.CAPACITOR	0.047	16V
C40	NCB31EK-223X	CER.CAPACITOR	0.022	25V
C41	QEXA1AM-227	E.CAPACITOR	220	10V
C42	NCB31CK-473X	CER.CAPACITOR	0.047	16V
C43	NCB31CK-473X	CER.CAPACITOR	0.047	16V
C44	NBE41VM-335X	TAN.CAPACITOR	3.3	35V
LC1	SCV1804-222Z	LC FILTER		
LC2	SCV1804-222Z	LC FILTER		
LC3	SCV1804-222Z	LC FILTER		
LC4	SCV1804-222Z	LC FILTER		
CN5	QGF0504C1-30X	CONNECTOR	30PIN	
FL1	NQR0122-001X	FL FILTER		
K1	NRS181J-0R0X	M.G.RESISTOR	0	1/8W

Symbol No.	Part No.	Part Name	Description	
IC1	MB90T678BPF	I.C.(M)	FUJITSU	
IC2	TC74VHC373FT-X	I.C.(M)	TOSHIBA	
IC3	PLSC1293	I.C.(M)	MBM29F002T-70PD(U)	
	PLSC1294	I.C.(M)	MBM29F002T-70PD(E)	
IC4	PLSC1292	I.C.(M)	MBM29F002T-70PD	
SK3	SCV2768-001X	IC SOCKET	for IC3	
SK4	SCV2768-001X	IC SOCKET	for IC4	
IC5	P16V8Z-25-01	I.C.(M)	ADVANCED MICRO	
IC6	CY62256LL70SN-X	I.C.(M)	CYPRESS	
IC7	UPD71055GB-10	I.C.(M)	NEC	
IC8	UPD6453GT-101	I.C.(M)	NEC	
IC9	NM93C86AEM8-X	I.C.(M)	NATIONAL SEMICO	
IC10	TA75S01F-X	I.C.(M)	TOSHIBA	
IC11	M62353GP-X	I.C.(M)	MITSUBISHI	
IC12	MN12821-QR-X	I.C.(M)	MATSUSHITA	
IC13	MC74HC367F-X	I.C.(M)	MOTOROLA	
IC14	TC7W00FU-X	I.C.(M)	TOSHIBA	
IC15	TC4053BFT-X	I.C.(M)	TOSHIBA	
IC16	NJM2068M-D-X	I.C.(M)	JRC	
IC17	NJM2068M-D-X	I.C.(M)	JRC	
IC18	TC4W53FU-X	I.C.(M)	TOSHIBA	
IC19	TC4W53FU-X	I.C.(M)	TOSHIBA	
IC20	TC7SH04FU-X	I.C.(M)	TOSHIBA	
IC21	NJM4556AM-X	I.C.(M)	JRC	
IC22	TC7W08FU-X	I.C.(M)	TOSHIBA	
IC23	TC7W08FU-X	I.C.(M)	TOSHIBA	
Q1	DTC124EUA-X	TRANSISTOR	ROHM	
Q2	DTA124EUA-X	TRANSISTOR	ROHM	
Q3	DTA124EUA-X	TRANSISTOR	ROHM	
Q4	DTA124EUA-X	TRANSISTOR	ROHM	
Q5	2SD2240/RST/-X	TRANSISTOR	MATSUSHITA	
Q6	DTC124EUA-X	TRANSISTOR	ROHM	
Q7	DTC124EUA-X	TRANSISTOR	ROHM	(E)
Q8	DTC124EUA-X	TRANSISTOR	ROHM	
Q9	DTC124EUA-X	TRANSISTOR	ROHM	
Q10	2SK662/QR/-X	FET	MATSUSHITA	
Q11	2SD601A/QRS/-X	TRANSISTOR	MATSUSHITA	
Q12	2SD601A/QRS/-X	TRANSISTOR	MATSUSHITA	
Q13	2SB1463/RST/-X	TRANSISTOR	MATSUSHITA	
Q14	2SD2240/RST/-X	TRANSISTOR	MATSUSHITA	
Q15	DTA124EUA-X	TRANSISTOR	ROHM	
D2	MA143A-X	DIODE	MATSUSHITA	
D3	MA143A-X	DIODE	MATSUSHITA	
D4	MA142A-X	DIODE	MATSUSHITA	
D5	MA142A-X	DIODE	MATSUSHITA	
D6	MA143A-X	DIODE	MATSUSHITA	
D7	MA143A-X	DIODE	MATSUSHITA	
D8	MA143A-X	DIODE	MATSUSHITA	
D9	MA143A-X	DIODE	MATSUSHITA	
D10	MA142A-X	DIODE	MATSUSHITA	
D11	MA143A-X	DIODE	MATSUSHITA	
D12	MA143A-X	DIODE	MATSUSHITA	
D13	MA142A-X	DIODE	MATSUSHITA	
D200	MA142A-X	DIODE	MATSUSHITA	
LD1	GL3HS44	L.E.D.	SHARP	
R1	NRSA63D-105X	M.G.RESISTOR	1M	1/16W
R2	NRSA63D-102X	M.G.RESISTOR	1k	1/16W
R3	NRSA63D-105X	M.G.RESISTOR	1M	1/16W
R4	NRSA63D-274X	M.G.RESISTOR	270k	1/16W
R5	NRSA63D-223X	M.G.RESISTOR	22k	1/16W
R6	NRSA63D-223X	M.G.RESISTOR	22k	1/16W
R7	NRSA63D-223X	M.G.RESISTOR	22k	1/16W
R8	NRSA63D-104X	M.G.RESISTOR	100k	1/16W
R9	NRSA63D-101X	M.G.RESISTOR	100	1/16W
R11	NRSA63D-274X	M.G.RESISTOR	270k	1/16W

[CP]

Symbol No.	Part No.	Part Name	Description	
R12	NRSA63D-473X	M.G.RESISTOR	47k	1/16W
R14	NRSA63D-101X	M.G.RESISTOR	100	1/16W
R15	NRSA63D-622X	M.G.RESISTOR	6.2k	1/16W
R16	NRSA63D-622X	M.G.RESISTOR	6.2k	1/16W
R17	NRSA63D-223X	M.G.RESISTOR	22k	1/16W
R18	NRSA63D-332X	M.G.RESISTOR	3.3k	1/16W
R19	NRSA63J-0R0X	M.G.RESISTOR	0	1/16W
R20	NRSA63D-101X	M.G.RESISTOR	100	1/16W
R21	NRSA63D-101X	M.G.RESISTOR	100	1/16W
R22	NRSA63D-223X	M.G.RESISTOR	22k	1/16W
R23	NRSA63D-101X	M.G.RESISTOR	100	1/16W
R24	NRSA63D-101X	M.G.RESISTOR	100	1/16W
R25	NRSA63D-681X	M.G.RESISTOR	680	1/16W
R26	NRSA63D-101X	M.G.RESISTOR	100	1/16W
R27	NRSA63D-101X	M.G.RESISTOR	100	1/16W
R28	NRSA63D-101X	M.G.RESISTOR	100	1/16W
R29	NRSA63D-101X	M.G.RESISTOR	100	1/16W
R30	NRSA63D-101X	M.G.RESISTOR	100	1/16W
R31	NRSA63D-101X	M.G.RESISTOR	100	1/16W
R32	NRSA63D-101X	M.G.RESISTOR	100	1/16W
R33	NRSA63D-101X	M.G.RESISTOR	100	1/16W
R34	NRSA63D-473X	M.G.RESISTOR	47k	1/16W
R35	NRSA63D-101X	M.G.RESISTOR	100	1/16W
R36	NRSA63D-101X	M.G.RESISTOR	100	1/16W
R37	NRSA63D-101X	M.G.RESISTOR	100	1/16W
R38	NRSA63D-101X	M.G.RESISTOR	100	1/16W
R39	NRSA63D-101X	M.G.RESISTOR	100	1/16W
R40	NRSA63D-101X	M.G.RESISTOR	100	1/16W
R41	NRSA63D-101X	M.G.RESISTOR	100	1/16W
R42	NRSA63D-101X	M.G.RESISTOR	100	1/16W
R43	NRSA63D-101X	M.G.RESISTOR	100	1/16W
R44	NRSA63D-101X	M.G.RESISTOR	100	1/16W
R45	NRSA63D-101X	M.G.RESISTOR	100	1/16W
R46	NRSA63D-392X	M.G.RESISTOR	3.9k	1/16W
R47	NRSA63D-101X	M.G.RESISTOR	100	1/16W
R48	NRSA63D-392X	M.G.RESISTOR	3.9k	1/16W
R49	NRSA63D-101X	M.G.RESISTOR	100	1/16W
R50	NRSA63D-392X	M.G.RESISTOR	3.9k	1/16W
R51	NRSA63D-101X	M.G.RESISTOR	100	1/16W
R52	NRSA63D-101X	M.G.RESISTOR	100	1/16W
R53	NRSA63D-101X	M.G.RESISTOR	100	1/16W
R54	NRSA63D-271X	M.G.RESISTOR	270	1/16W
R55	NRSA63D-101X	M.G.RESISTOR	100	1/16W
R56	NRSA63D-101X	M.G.RESISTOR	100	1/16W
R57	NRSA63D-124X	M.G.RESISTOR	120k	1/16W
R58	NRSA63D-334X	M.G.RESISTOR	330k	1/16W
R59	NRSA63D-103X	M.G.RESISTOR	10k	1/16W
R60	NRSA63D-104X	M.G.RESISTOR	100k	1/16W
R61	NRSA63D-223X	M.G.RESISTOR	22k	1/16W
R62	NRSA63D-562X	M.G.RESISTOR	5.6k	1/16W
R63	NRSA63D-103X	M.G.RESISTOR	10k	1/16W
R64	NRSA63D-183X	M.G.RESISTOR	18k	1/16W
R65	NRSA63J-0R0X	M.G.RESISTOR	0	1/16W
R66	NRSA63J-0R0X	M.G.RESISTOR	0	1/16W
R67	NRSA63D-223X	M.G.RESISTOR	22k	1/16W
R68	NRSA63D-223X	M.G.RESISTOR	22k	1/16W
R69	NRSA63D-223X	M.G.RESISTOR	22k	1/16W
R70	NRSA63D-223X	M.G.RESISTOR	22k	1/16W
R71	NRSA63D-223X	M.G.RESISTOR	22k	1/16W
R72	NRSA63D-223X	M.G.RESISTOR	22k	1/16W
R73	NRSA63D-223X	M.G.RESISTOR	22k	1/16W
R74	NRSA63D-223X	M.G.RESISTOR	22k	1/16W
R75	NRSA63D-223X	M.G.RESISTOR	22k	1/16W
R76	NRSA63D-223X	M.G.RESISTOR	22k	1/16W
R77	NRSA63D-223X	M.G.RESISTOR	22k	1/16W
R78	NRSA63D-223X	M.G.RESISTOR	22k	1/16W
R79	NRSA63D-223X	M.G.RESISTOR	22k	1/16W
R80	NRSA63D-223X	M.G.RESISTOR	22k	1/16W
R81	NRSA63D-223X	M.G.RESISTOR	22k	1/16W
R82	NRSA63D-223X	M.G.RESISTOR	22k	1/16W
R83	NRSA63D-223X	M.G.RESISTOR	22k	1/16W
R84	NRSA63D-223X	M.G.RESISTOR	22k	1/16W
R85	NRSA63D-223X	M.G.RESISTOR	22k	1/16W

Symbol No.	Part No.	Part Name	Description	
R86	NRSA63D-223X	M.G.RESISTOR	22k	1/16W
R87	NRSA63D-223X	M.G.RESISTOR	22k	1/16W
R88	NRSA63D-223X	M.G.RESISTOR	22k	1/16W
R89	NRSA63D-223X	M.G.RESISTOR	22k	1/16W
R90	NRSA63D-223X	M.G.RESISTOR	22k	1/16W
R91	NRSA63D-223X	M.G.RESISTOR	22k	1/16W
R92	NRSA63D-223X	M.G.RESISTOR	22k	1/16W
R93	NRSA63D-223X	M.G.RESISTOR	22k	1/16W
R94	NRSA63D-471X	M.G.RESISTOR	470	1/16W
R95	NRSA63D-223X	M.G.RESISTOR	22k	1/16W
R96	NRSA63D-223X	M.G.RESISTOR	22k	1/16W
R97	NRSA63D-223X	M.G.RESISTOR	22k	1/16W
R98	NRSA63D-223X	M.G.RESISTOR	22k	1/16W
R99	NRSA63D-223X	M.G.RESISTOR	22k	1/16W
R100	NRSA63D-223X	M.G.RESISTOR	22k	1/16W
R101	NRSA63D-103X	M.G.RESISTOR	10k	1/16W
R102	NRSA63D-223X	M.G.RESISTOR	22k	1/16W
R103	NRSA63D-101X	M.G.RESISTOR	100	1/16W
R104	NRSA63D-101X	M.G.RESISTOR	100	1/16W
R105	NRSA63D-101X	M.G.RESISTOR	100	1/16W
R106	NRSA63D-101X	M.G.RESISTOR	100	1/16W
R107	NRSA63D-101X	M.G.RESISTOR	100	1/16W
R108	NRSA02J-682X	M.G.RESISTOR	6.8k	1/10W
R109	NRSA02J-682X	M.G.RESISTOR	6.8k	1/10W
R110	NRSA02J-682X	M.G.RESISTOR	6.8k	1/10W
R111	NRSA02J-682X	M.G.RESISTOR	6.8k	1/10W
R112	NRSA02J-682X	M.G.RESISTOR	6.8k	1/10W
R113	NRSA02J-682X	M.G.RESISTOR	6.8k	1/10W
R114	NRSA02J-682X	M.G.RESISTOR	6.8k	1/10W
R115	NRSA02J-682X	M.G.RESISTOR	6.8k	1/10W
R116	NRSA63D-273X	M.G.RESISTOR	27k	1/16W
R117	NRSA63D-104X	M.G.RESISTOR	100k	1/16W
R118	NRSA63D-202X	M.G.RESISTOR	2k	1/16W
R119	NRSA63D-473X	M.G.RESISTOR	47k	1/16W
R120	NRSA63D-153X	M.G.RESISTOR	15k	1/16W
R122	NRSA63D-104X	M.G.RESISTOR	100k	1/16W
R123	NRSA63D-473X	M.G.RESISTOR	47k	1/16W
R124	NRSA63D-473X	M.G.RESISTOR	47k	1/16W (E)
R125	NRSA63D-223X	M.G.RESISTOR	22k	1/16W
R126	NRSA63D-103X	M.G.RESISTOR	10k	1/16W
R127	NRSA63D-103X	M.G.RESISTOR	10k	1/16W
R128	NRSA63D-222X	M.G.RESISTOR	2.2k	1/16W
R129	NRSA63D-104X	M.G.RESISTOR	100k	1/16W
R130	NRSA63D-104X	M.G.RESISTOR	100k	1/16W
R131	NRSA63D-103X	M.G.RESISTOR	10k	1/16W
R132	NRSA63D-392X	M.G.RESISTOR	3.9k	1/16W
R133	NRSA63D-105X	M.G.RESISTOR	1M	1/16W
R134	NRSA63D-104X	M.G.RESISTOR	100k	1/16W
R135	NRSA63D-222X	M.G.RESISTOR	2.2k	1/16W
R136	NRSA63D-333X	M.G.RESISTOR	33k	1/16W
R137	NRSA63D-124X	M.G.RESISTOR	120k	1/16W
R138	NRSA63D-124X	M.G.RESISTOR	120k	1/16W
R139	NRSA63D-270X	M.G.RESISTOR	27	1/16W
R140	NRSA63D-270X	M.G.RESISTOR	27	1/16W
R141	NRSA63D-122X	M.G.RESISTOR	1.2k	1/16W
R142	NRSA63D-122X	M.G.RESISTOR	1.2k	1/16W
R143	NRSA63D-270X	M.G.RESISTOR	27	1/16W
R144	NRSA63D-270X	M.G.RESISTOR	27	1/16W
R145	NRSA63D-223X	M.G.RESISTOR	22k	1/16W
R146	NRSA63D-223X	M.G.RESISTOR	22k	1/16W
R147	NRSA63D-220X	M.G.RESISTOR	22	1/16W
R148	NRSA63D-220X	M.G.RESISTOR	22	1/16W
R149	NRSA63D-220X	M.G.RESISTOR	22	1/16W
R150	NRSA63D-220X	M.G.RESISTOR	22	1/16W
R151	NRSA63D-220X	M.G.RESISTOR	22	1/16W
R152	NRSA63D-220X	M.G.RESISTOR	22	1/16W
R153	NRSA63D-153X	M.G.RESISTOR	15k	1/16W
R154	NRSA63D-472X	M.G.RESISTOR	4.7k	1/16W
R155	NRSA63D-750X	M.G.RESISTOR	75	1/16W
R156	NRSA63D-680X	M.G.RESISTOR	68	1/16W
R157	NRSA63D-202X	M.G.RESISTOR	2k	1/16W
R158	NRSA63D-472X	M.G.RESISTOR	4.7k	1/16W
R159	NRSA63D-153X	M.G.RESISTOR	15k	1/16W

Symbol No.	Part No.	Part Name	Description	
R160	NRSA63D-153X	M.G.RESISTOR	15k	1/16W
R161	NRSA63D-104X	M.G.RESISTOR	100k	1/16W
R162	NRSA63D-101X	M.G.RESISTOR	100	1/16W
R163	NRSA63D-104X	M.G.RESISTOR	100k	1/16W
R164	NRSA63D-104X	M.G.RESISTOR	100k	1/16W
R165	NRSA63D-473X	M.G.RESISTOR	47k	1/16W
R166	NRSA63D-473X	M.G.RESISTOR	47k	1/16W
R167	NRSA63D-473X	M.G.RESISTOR	47k	1/16W
R169	NRSA63D-101X	M.G.RESISTOR	100	1/16W
R170	NRSA63D-560X	M.G.RESISTOR	56	1/16W
R171	NRSA63D-560X	M.G.RESISTOR	56	1/16W
R172	NRSA63D-152X	M.G.RESISTOR	1.5k	1/16W
R173	NRSA63J-0R0X	M.G.RESISTOR	0	1/16W (E)
R174	NRSA63J-0R0X	M.G.RESISTOR	0	1/16W (E)
R175	NRSA63J-0R0X	M.G.RESISTOR	0	1/16W (U)
R176	NRSA63J-0R0X	M.G.RESISTOR	0	1/16W (E)
R177	NRSA63J-0R0X	M.G.RESISTOR	0	1/16W (U)
R178	NRSA63J-0R0X	M.G.RESISTOR	0	1/16W (E)
R179	NRSA63J-0R0X	M.G.RESISTOR	0	1/16W (E)
R180	NRSA63J-0R0X	M.G.RESISTOR	0	1/16W (U)
R181	NRSA63J-0R0X	M.G.RESISTOR	0	1/16W (E)
R200	NRSA63D-392X	M.G.RESISTOR	3.9k	1/16W
VR1	QVPB609-203Z	TRIM.RESISTOR	20k	H PHASE
VR2	QVPB609-203Z	TRIM.RESISTOR	20k	SC FINE
VR3	QVQ0162-A14	VAL.RESISTOR	10k	DA1 LEVEL
VR4	QVQ0162-A14	VAL.RESISTOR	10k	DA2 LEVEL
VR5	QVQ0162-A14	VAL.RESISTOR	10k	MONITOR
VR6	QVQ0162-A14	VAL.RESISTOR	10k	ALARM
C1	NCB10JM-335X	CER.CAPACITOR	3.3	6.3V
C2	NEH90JM-107X	E.CAPACITOR	100	6.3V
C3	NCB10JM-335X	CER.CAPACITOR	3.3	6.3V
C4	NEH91CM-476X	E.CAPACITOR	47	16V
C6	NEH90JM-107X	E.CAPACITOR	100	6.3V
C7	NEH91CM-476X	E.CAPACITOR	47	16V
C8	NCB10JM-335X	CER.CAPACITOR	3.3	6.3V
C9	NCB10JM-335X	CER.CAPACITOR	3.3	6.3V
C10	NCB31CK-473X	CER.CAPACITOR	0.047	16V
C11	NCB10JM-335X	CER.CAPACITOR	3.3	6.3V
C12	NCB31CK-473X	CER.CAPACITOR	0.047	16V
C13	NCB10JM-335X	CER.CAPACITOR	3.3	6.3V
C14	NCB31CK-473X	CER.CAPACITOR	0.047	16V
C15	NCB10JM-335X	CER.CAPACITOR	3.3	6.3V
C16	NCB31CK-473X	CER.CAPACITOR	0.047	16V
C17	NCB10JM-335X	CER.CAPACITOR	3.3	6.3V
C18	NCB31CK-473X	CER.CAPACITOR	0.047	16V
C19	NCB10JM-335X	CER.CAPACITOR	3.3	6.3V
C20	NCB31CK-473X	CER.CAPACITOR	0.047	16V
C21	NCB10JM-335X	CER.CAPACITOR	3.3	6.3V
C22	NDC31HJ-331X	CER.CAPACITOR	330p	50V
C23	NCB10JM-335X	CER.CAPACITOR	3.3	6.3V
C24	NDC31HJ-101X	CER.CAPACITOR	100p	50V
C25	NCB31CK-473X	CER.CAPACITOR	0.047	16V
C26	NCB31CK-473X	CER.CAPACITOR	0.047	16V
C27	NEH91HM-335X	E.CAPACITOR	3.3	50V
C28	NEH91HM-335X	E.CAPACITOR	3.3	50V
C29	NEH91HM-335X	E.CAPACITOR	3.3	50V
C30	NCB31CK-333X	CER.CAPACITOR	0.033	16V
C31	NCB31CK-333X	CER.CAPACITOR	0.033	16V
C32	NCB10JM-335X	CER.CAPACITOR	3.3	6.3V
C33	NCB10JM-335X	CER.CAPACITOR	3.3	6.3V
C34	NDC21HJ-152X	CER.CAPACITOR	1500p	50V
C35	NEH91AM-336X	E.CAPACITOR	33	10V
C36	NBE21CM-105X	TAN.CAPACITOR	1	16V
C37	NDC31HJ-101X	CER.CAPACITOR	100p	50V
C38	NCB11CK-105X	CER.CAPACITOR	1	16V
C39	NEH91AM-336X	E.CAPACITOR	33	10V
C40	NCB10JM-335X	CER.CAPACITOR	3.3	6.3V
C41	NDC31HJ-331X	CER.CAPACITOR	330p	50V
C42	NDC31HJ-101X	CER.CAPACITOR	100p	50V
C43	NDC31HJ-101X	CER.CAPACITOR	100p	50V

Symbol No.	Part No.	Part Name	Description	
C44	NCB31CK-473X	CER.CAPACITOR	0.047	16V
C45	NCB31CK-473X	CER.CAPACITOR	0.047	16V
C46	NCB31CK-473X	CER.CAPACITOR	0.047	16V
C47	NEH90JM-107X	E.CAPACITOR	100	6.3V
C48	NBE21AM-106X	TAN.CAPACITOR	10	10V
C49	NCB10JM-335X	CER.CAPACITOR	3.3	6.3V
C50	NDC31HJ-221X	CER.CAPACITOR	220p	50V
C51	NCB31CK-473X	CER.CAPACITOR	0.047	16V
C55	NDC21HJ-152X	CER.CAPACITOR	1500p	50V
C60	NCB31CK-473X	CER.CAPACITOR	0.047	16V
L1	NQL054K-101X	COIL	100uH	
L2	NQL054K-101X	COIL	100uH	
L3	NQL114K-100X	COIL	10uH	
L4	NQL114K-100X	COIL	10uH	
X1	NAX0061-001X	CRYSTAL	4MHz	
S1	SCV2595-008W	DIP SWITCH		
S2	QSW0233-001	ROTARY SWICH	SC COARSE	
S3	NSW0070-002X	SLIDE SWITCH	SHUTTER	
S4	NSW0070-002X	SLIDE SWITCH	IRIS	
S5	NSW0070-002X	SLIDE SWITCH	BLACK	
S6	NSW0070-002X	SLIDE SWITCH	FINE	
S7	NSW0010-001X	SWITCH	FULL AUTO	
S8	NSW0010-001X	SWITCH	LOLUX	
S9	NSW0010-001X	SWITCH	DOWN	
S10	NSW0010-001X	SWITCH	UP	
S11	NSW0010-001X	SWITCH	ITEM	
S12	NSW0010-001X	SWITCH	SET	
S13	NSW0010-001X	SWITCH	MENU	
S14	NSW0018-001X	SLIDE SWITCH	RS232C/VTR	
CN1	QGA1201F2-04X	CONNECTOR	4PIN	
CN6	QGA1201F2-13X	CONNECTOR	13PIN	
CN8	QGA1201F2-12X	CONNECTOR	12PIN	
CN16	QGA1201F2-15X	CONNECTOR	15PIN	
CN21	QGA1201F2-10X	CONNECTOR	10PIN	
CN26	QGA1201F2-07X	CONNECTOR	7PIN	
CN27	QGA1201F2-04X	CONNECTOR	4PIN	
CN28	QGA1201F2-03X	CONNECTOR	3PIN	
CN29	QGA1201F2-02X	CONNECTOR	2PIN	
CN30	QGF1012F1-10X	CONNECTOR	10PIN	
CN31	QGA1201F2-09X	CONNECTOR	9PIN	
CN32	QGF1012F1-24X	CONNECTOR	24PIN	
CN50	QGA1201F2-06X	CONNECTOR	6PIN	(U)
K1	SCV2662-027	FERRITE BEADS	K1 - K7	
K8	NQR0265-001X	FERAITE BEAD	K8 - K24	

6.6 MAIN BOARD ASSEMBLY PARTS LIST [0][6]

SCK2610-U0A(U)

SCK2610-E0A(E) [0][6]□□□□□□□

Symbol No.	Part No.	Part Name	Description
IC101	UPD78P58YGC-3B9	I.C.(M)	NEC
IC102	SN74LV244APW-X	I.C.(M)	TEXAS
IC103	SN74CBT3253PW-X	I.C.(M)	TEXAS
IC104	SN74CBT3345PW-X	I.C.(M)	TEXAS
IC105	SN74CBT3345PW-X	I.C.(M)	TEXAS
IC106	TC74VHC174FT-X	I.C.(M)	TOSHIBA
IC107	TC74VHCT541AFTX	I.C.(M)	TOSHIBA
IC108	TC7WH126FU-X	I.C.(M)	TOSHIBA
IC109	DS26C32ATM-X	I.C.(M)	NATIONAL SEMICO
IC110	BU4094BCFV-X	I.C.(M)	ROHM
IC111	UPC4082G2-X	I.C.(M)	NEC
IC112	S-81240SGUP-X	I.C.(M)	SEIKO
IC201	JCL0029	I.C.(M)	JVC
IC202	DS90LV031ATM-X	I.C.(M)	NATIONAL SEMICO
IC203	TC74VHC541FT-X	I.C.(M)	TOSHIBA
IC204	TC7S66FU-X	I.C.(M)	TOSHIBA
IC205	S-81240SGUP-X	I.C.(M)	SEIKO
IC206	JCL0030	I.C.(M)	JVC
IC207	HM538254BTT-7	I.C.(M)	HITACHI
IC208	SN74CBT3345PW-X	I.C.(M)	TEXAS
IC209	SN74CBT3345PW-X	I.C.(M)	TEXAS
IC210	TC74VHCT541AFTX	I.C.(M)	TOSHIBA
IC211	SN74CBT3345PW-X	I.C.(M)	TEXAS
IC212	SN74CBT3345PW-X	I.C.(M)	TEXAS
IC213	HM538254BTT-7	I.C.(M)	HITACHI
IC214	DS90LV032ATM-X	I.C.(M)	NATIONAL SEMICO
IC215	XC9536XL-10Q-01	I.C.(M)	XILINX
IC216	L7A1433	I.C.(M)	LSI LOGIC
IC217	L7A1433	I.C.(M)	LSI LOGIC
IC218	MN673711	I.C.(M)	MATSUSHITA
IC219	MN673711	I.C.(M)	MATSUSHITA
IC220	UPD42S4260ALG5	I.C.(M)	NEC
IC221	UPD42S4260ALG5	I.C.(M)	NEC
IC222	S-81224SGUP-X	I.C.(M)	SEIKO
IC223	S-81224SGUP-X	I.C.(M)	SEIKO
IC224	JCL0028	I.C.(M)	JVC
IC225	UPD489001	I.C.(M)	NEC
IC226	UPD489001	I.C.(M)	NEC
IC227	UPD489001	I.C.(M)	NEC
IC228	UPD489001	I.C.(M)	NEC
IC229	TC74VHCT541AFTX	I.C.(M)	TOSHIBA
IC230	TC74VHC541FT-X	I.C.(M)	TOSHIBA
IC301	CLC450AJM5-X	I.C.(M)	NATIONAL SEMICO
IC302	TC4W53FU-X	I.C.(M)	TOSHIBA
IC303	CLC450AJM5-X	I.C.(M)	NATIONAL SEMICO
IC304	NJM062M-X	I.C.(M)	JRC
IC305	TDA8766G/C1	I.C.(M)	PHILIPS
IC306	S-81233SGUP-X	I.C.(M)	SEIKO
IC307	CLC450AJM5-X	I.C.(M)	NATIONAL SEMICO
IC308	TC4W53FU-X	I.C.(M)	TOSHIBA
IC309	CLC450AJM5-X	I.C.(M)	NATIONAL SEMICO
IC310	TDA8766G/C1	I.C.(M)	PHILIPS
IC311	CLC450AJM5-X	I.C.(M)	NATIONAL SEMICO
IC312	TC4W53FU-X	I.C.(M)	TOSHIBA
IC313	CLC450AJM5-X	I.C.(M)	NATIONAL SEMICO
IC314	NJM062M-X	I.C.(M)	JRC
IC315	TDA8766G/C1	I.C.(M)	PHILIPS
IC316	TC7WH157FU-X	I.C.(M)	TOSHIBA
IC317	SN74LV125APW-X	I.C.(M)	TEXAS
IC318	MN47V77S-XE	I.C.(M)	MATSUSHITA
IC319	MN47V77S-XE	I.C.(M)	MATSUSHITA
IC320	MN47V77S-XE	I.C.(M)	MATSUSHITA
IC321	MN47V77S-XE	I.C.(M)	MATSUSHITA
IC325	JCS0050	I.C.(M)	JVC
IC326	EPF6010ATC100-3	I.C.(M)	ALTERA
IC327	MN657021F	I.C.(M)	MATSUSHITA
IC328	S-81233SGUP-X	I.C.(M)	SEIKO
IC329	EPF6010ATC100-3	I.C.(M)	ALTERA
IC330	TC7WH126FU-X	I.C.(M)	TOSHIBA
IC331	TC4W53FU-X	I.C.(M)	TOSHIBA
IC332	TC4W53FU-X	I.C.(M)	TOSHIBA
IC333	TC74VHCT541AFTX	I.C.(M)	TOSHIBA
IC334	SN74LV125APW-X	I.C.(M)	TEXAS

Symbol No.	Part No.	Part Name	Description
IC401	CLC450AJM5-X	I.C.(M)	NATIONAL SEMICO
IC402	NJM062M-X	I.C.(M)	JRC
IC403	CLC450AJM5-X	I.C.(M)	NATIONAL SEMICO
IC404	CLC450AJM5-X	I.C.(M)	NATIONAL SEMICO
IC405	TC7SH08FU-X	I.C.(M)	TOSHIBA
IC406	CLC450AJM5-X	I.C.(M)	NATIONAL SEMICO
IC407	CLC450AJM5-X	I.C.(M)	NATIONAL SEMICO
IC408	NJM062M-X	I.C.(M)	JRC
IC409	CLC450AJM5-X	I.C.(M)	NATIONAL SEMICO
IC410	CLC450AJM5-X	I.C.(M)	NATIONAL SEMICO
IC413	TC7SH04FU-X	I.C.(M)	TOSHIBA (U)
IC414	TC7SH08FU-X	I.C.(M)	TOSHIBA (U)
IC415	CLC450AJM5-X	I.C.(M)	NATIONAL SEMICO
IC416	CLC450AJM5-X	I.C.(M)	NATIONAL SEMICO
IC417	NJM1496V-X	I.C.(M)	JRC
IC418	CLC450AJM5-X	I.C.(M)	NATIONAL SEMICO
IC419	CLC450AJM5-X	I.C.(M)	NATIONAL SEMICO
IC420	NJM1496V-X	I.C.(M)	JRC
IC421	TC4W53FU-X	I.C.(M)	TOSHIBA (E)
IC422	CLC450AJM5-X	I.C.(M)	NATIONAL SEMICO
IC423	CLC450AJM5-X	I.C.(M)	NATIONAL SEMICO
IC424	TC4W53FU-X	I.C.(M)	TOSHIBA
IC425	SN74LV08APW-X	I.C.(M)	TEXAS
IC426	CLC450AJM5-X	I.C.(M)	NATIONAL SEMICO
IC427	CLC450AJM5-X	I.C.(M)	NATIONAL SEMICO
IC428	M62352GP-W	I.C.(M)	MITSUBISHI
IC429	JCS0027	I.C.(M)	JVC
IC430	UPC2384GA	I.C.(M)	NEC
IC431	TC74VHC541FT-X	I.C.(M)	TOSHIBA
IC432	TC74VHC541FT-X	I.C.(M)	TOSHIBA
IC433	TC74VHCT541AFTX	I.C.(M)	TOSHIBA
IC434	TC7WH157FU-X	I.C.(M)	TOSHIBA
IC435	TC7WH157FU-X	I.C.(M)	TOSHIBA
IC436	TC74HC4053AFT-X	I.C.(M)	TOSHIBA
IC437	TC7SH86FU-X	I.C.(M)	TOSHIBA
IC438	S-81250SGUP-X	I.C.(M)	SEIKO
IC439	MC74HC4046AF-X	I.C.(M)	MOTOROLA
IC440	LMC6082IM-X	I.C.(M)	NATIONAL SEMICO
IC441	UPC812G2-X	I.C.(M)	NEC
IC442	TC74HC4538AFT-X	I.C.(M)	TOSHIBA
IC443	LM1881M-X	I.C.(M)	NATIONAL SEMICO
IC444	CLC450AJM5-X	I.C.(M)	NATIONAL SEMICO
IC445	TC4W53FU-X	I.C.(M)	TOSHIBA
IC447	TC4W53FU-X	I.C.(M)	TOSHIBA
IC448	TC4W53FU-X	I.C.(M)	TOSHIBA (E)
IC700	M65401FP	I.C.(M)	MITSUBISHI
IC701	M52660FP	I.C.(M)	MITSUBISHI
IC702	M65401FP	I.C.(M)	MITSUBISHI
IC703	AK4323VF-X	I.C.(M)	ASAHI KASEI
IC704	TC74VHCT541AFTX	I.C.(M)	TOSHIBA
IC705	SN74LV125APW-X	I.C.(M)	TEXAS
IC706	AK5340-VS	I.C.(M)	ASAHI KASEI
IC707	AK5340-VS	I.C.(M)	ASAHI KASEI
IC708	PCM1710U/G/-XE	I.C.(M)	BURR BROWN
IC709	TC74VHCT541AFTX	I.C.(M)	TOSHIBA
IC710	LP2986IMM-X	I.C.(M)	NATIONAL SEMICO
IC711	LP2986IMM-X	I.C.(M)	NATIONAL SEMICO
IC712	S-81224SGUP-X	I.C.(M)	SEIKO
IC714	TC7SH86FU-X	I.C.(M)	TOSHIBA
Q101	XN4509-W	TRANSISTOR	MATSUSHITA
Q102	XN6435-X	TRANSISTOR	MATSUSHITA
Q401	2SK663/QR/-X	FET	MATSUSHITA
Q402	2SK663/QR/-X	FET	MATSUSHITA (U)
Q403	2SK663/QR/-X	FET	MATSUSHITA
Q404	2SK663/QR/-X	FET	MATSUSHITA (U)
Q405	2SK663/QR/-X	FET	MATSUSHITA
Q406	2SK663/QR/-X	FET	MATSUSHITA (U)
Q407	2SA1790/BC/-X	TRANSISTOR	MATSUSHITA
Q408	2SA1790/BC/-X	TRANSISTOR	MATSUSHITA (U)
Q409	2SK663/QR/-X	FET	MATSUSHITA
Q410	2SK663/QR/-X	FET	MATSUSHITA

Symbol No.	Part No.	Part Name	Description	
Q411	2SK663/QR/-X	FET	MATSUSHITA	
Q412	2SC4626/BC/-X	TRANSISTOR	MATSUSHITA	
Q413	2SA1790/BC/-X	TRANSISTOR	MATSUSHITA	
D101	DAN202U-X	DIODE	ROHM	
D401	SVC341/L/-X	VARI CAPA DIODE	SANYO	
D402	MA143A-X	DIODE	MATSUSHITA	
D403	MA143A-X	DIODE	MATSUSHITA	
D404	MA143A-X	DIODE	MATSUSHITA	
D700	DAN202U-X	DIODE	ROHM	
R1	NRSA63J-0R0X	M.G.RESISTOR	0	1/16W
R2	NRSA63D-562X	M.G.RESISTOR	5.6k	1/16W
R3	NRSA63D-101X	M.G.RESISTOR	100	1/16W
R4	NRSA63D-101X	M.G.RESISTOR	100	1/16W
R5	NRSA63D-101X	M.G.RESISTOR	100	1/16W
R6	NRSA63D-101X	M.G.RESISTOR	100	1/16W
R7	NRSA63D-101X	M.G.RESISTOR	100	1/16W
R8	NRSA63D-101X	M.G.RESISTOR	100	1/16W
R9	NRSA63D-101X	M.G.RESISTOR	100	1/16W
R10	NRSA63D-101X	M.G.RESISTOR	100	1/16W
R11	NRSA63D-101X	M.G.RESISTOR	100	1/16W
R12	NRSA63D-101X	M.G.RESISTOR	100	1/16W
R13	NRSA63D-101X	M.G.RESISTOR	100	1/16W
R14	NRSA63D-101X	M.G.RESISTOR	100	1/16W
R15	NRSA63D-101X	M.G.RESISTOR	100	1/16W
R16	NRSA63D-101X	M.G.RESISTOR	100	1/16W
R17	NRSA63D-101X	M.G.RESISTOR	100	1/16W
R99	NRSA63D-102X	M.G.RESISTOR	1k	1/16W
R101	NRSA63D-102X	M.G.RESISTOR	1k	1/16W
R102	NRSA63D-222X	M.G.RESISTOR	2.2k	1/16W
R103	NRSA63D-471X	M.G.RESISTOR	470	1/16W
R104	NRSA63D-222X	M.G.RESISTOR	2.2k	1/16W
R105	NRSA63D-822X	M.G.RESISTOR	8.2k	1/16W
R106	NRSA63D-102X	M.G.RESISTOR	1k	1/16W
R107	NRSA63D-102X	M.G.RESISTOR	1k	1/16W
R108	NRSA63D-472X	M.G.RESISTOR	4.7k	1/16W
R109	NRSA63D-121X	M.G.RESISTOR	120	1/16W
R110	NRSA63D-562X	M.G.RESISTOR	5.6k	1/16W
R111	NRSA63D-333X	M.G.RESISTOR	33k	1/16W
R112	NRSA63D-333X	M.G.RESISTOR	33k	1/16W
R113	NRSA63D-333X	M.G.RESISTOR	33k	1/16W
R114	NRSA63D-333X	M.G.RESISTOR	33k	1/16W
R115	NRSA63D-333X	M.G.RESISTOR	33k	1/16W
R117	NRSA63D-102X	M.G.RESISTOR	1k	1/16W
R118	NRSA63D-101X	M.G.RESISTOR	100	1/16W
R119	NRSA63D-101X	M.G.RESISTOR	100	1/16W
R134	NRSA63D-333X	M.G.RESISTOR	33k	1/16W
R138	NRSA63D-562X	M.G.RESISTOR	5.6k	1/16W
R139	NRSA63D-562X	M.G.RESISTOR	5.6k	1/16W
R140	NRSA63D-562X	M.G.RESISTOR	5.6k	1/16W
R141	NRSA63D-562X	M.G.RESISTOR	5.6k	1/16W
R142	NRSA63D-562X	M.G.RESISTOR	5.6k	1/16W
R201	NRSA63J-105X	M.G.RESISTOR	1M	1/16W
R202	NRSA63D-103X	M.G.RESISTOR	10k	1/16W
R203	NRSA63D-101X	M.G.RESISTOR	100	1/16W
R204	NRSA63D-222X	M.G.RESISTOR	2.2k	1/16W
R205	NRSA63D-101X	M.G.RESISTOR	100	1/16W
R206	NRSA63D-101X	M.G.RESISTOR	100	1/16W
R207	NRSA63D-101X	M.G.RESISTOR	100	1/16W
R208	NRSA63D-101X	M.G.RESISTOR	100	1/16W
R209	NRSA63D-101X	M.G.RESISTOR	100	1/16W
R210	NRSA63D-101X	M.G.RESISTOR	100	1/16W
R211	NRSA63D-101X	M.G.RESISTOR	100	1/16W
R212	NRSA63D-101X	M.G.RESISTOR	100	1/16W
R213	NRSA63D-101X	M.G.RESISTOR	100	1/16W
R214	NRSA63D-101X	M.G.RESISTOR	100	1/16W
R215	NRSA63D-101X	M.G.RESISTOR	100	1/16W
R216	NRSA63D-101X	M.G.RESISTOR	100	1/16W
R217	NRSA63D-101X	M.G.RESISTOR	100	1/16W
R220	NRSA63D-101X	M.G.RESISTOR	100	1/16W

Symbol No.	Part No.	Part Name	Description	
R221	NRSA63D-101X	M.G.RESISTOR	100	1/16W
R224	NRSA63D-103X	M.G.RESISTOR	10k	1/16W
R225	NRSA63D-103X	M.G.RESISTOR	10k	1/16W
R226	NRSA63D-103X	M.G.RESISTOR	10k	1/16W
R227	NRSA63D-103X	M.G.RESISTOR	10k	1/16W
R228	NRSA63D-101X	M.G.RESISTOR	100	1/16W
R229	NRSA63D-101X	M.G.RESISTOR	100	1/16W
R230	NRSA63D-101X	M.G.RESISTOR	100	1/16W
R231	NRSA63D-101X	M.G.RESISTOR	100	1/16W
R232	NRSA63D-101X	M.G.RESISTOR	100	1/16W
R233	NRSA63D-101X	M.G.RESISTOR	100	1/16W
R234	NRSA63D-101X	M.G.RESISTOR	100	1/16W
R235	NRSA63D-101X	M.G.RESISTOR	100	1/16W
R236	NRSA63D-101X	M.G.RESISTOR	100	1/16W
R237	NRSA63D-101X	M.G.RESISTOR	100	1/16W
R238	NRSA63D-101X	M.G.RESISTOR	100	1/16W
R239	NRSA63D-101X	M.G.RESISTOR	100	1/16W
R240	NRSA63D-101X	M.G.RESISTOR	100	1/16W
R241	NRSA63D-101X	M.G.RESISTOR	100	1/16W
R242	NRSA63D-101X	M.G.RESISTOR	100	1/16W
R243	NRSA63D-101X	M.G.RESISTOR	100	1/16W
R244	NRSA63D-101X	M.G.RESISTOR	100	1/16W
R245	NRSA63D-101X	M.G.RESISTOR	100	1/16W
R246	NRSA63J-0R0X	M.G.RESISTOR	0	1/16W (E)
R247	NRSA63D-101X	M.G.RESISTOR	100	1/16W
R248	NRSA63D-101X	M.G.RESISTOR	100	1/16W
R249	NRSA63D-101X	M.G.RESISTOR	100	1/16W
R250	NRSA63D-101X	M.G.RESISTOR	100	1/16W
R251	NRSA63D-102X	M.G.RESISTOR	1k	1/16W
R252	NRSA63D-104X	M.G.RESISTOR	100k	1/16W
R253	NRSA63D-101X	M.G.RESISTOR	100	1/16W
R256	NRSA63D-101X	M.G.RESISTOR	100	1/16W
R257	NRSA63D-101X	M.G.RESISTOR	100	1/16W
R258	NRSA63D-101X	M.G.RESISTOR	100	1/16W
R259	NRSA63D-101X	M.G.RESISTOR	100	1/16W
R260	NRSA63D-101X	M.G.RESISTOR	100	1/16W
R261	NRSA63D-101X	M.G.RESISTOR	100	1/16W
R262	NRSA63D-101X	M.G.RESISTOR	100	1/16W
R263	NRSA63D-101X	M.G.RESISTOR	100	1/16W
R264	NRSA63D-332X	M.G.RESISTOR	3.3k	1/16W
R265	NRSA63D-222X	M.G.RESISTOR	2.2k	1/16W
R266	NRSA63D-101X	M.G.RESISTOR	100	1/16W
R267	NRSA63D-101X	M.G.RESISTOR	100	1/16W
R268	NRSA63D-101X	M.G.RESISTOR	100	1/16W
R269	NRSA63D-101X	M.G.RESISTOR	100	1/16W
R270	NRSA63D-101X	M.G.RESISTOR	100	1/16W
R271	NRSA63D-101X	M.G.RESISTOR	100	1/16W
R272	NRSA63D-101X	M.G.RESISTOR	100	1/16W
R273	NRSA63D-101X	M.G.RESISTOR	100	1/16W
R274	NRSA63D-560X	M.G.RESISTOR	56	1/16W
R275	NRSA63D-560X	M.G.RESISTOR	56	1/16W
R276	NRSA63D-560X	M.G.RESISTOR	56	1/16W
R277	NRSA63D-560X	M.G.RESISTOR	56	1/16W
R280	NRSA63D-101X	M.G.RESISTOR	100	1/16W
R281	NRSA63D-101X	M.G.RESISTOR	100	1/16W
R282	NRSA63D-101X	M.G.RESISTOR	100	1/16W
R283	NRSA63D-101X	M.G.RESISTOR	100	1/16W
R301	NRSA63D-101X	M.G.RESISTOR	100	1/16W
R302	NRSA63D-104X	M.G.RESISTOR	100k	1/16W
R303	NRSA63D-102X	M.G.RESISTOR	1k	1/16W
R304	NRSA63D-331X	M.G.RESISTOR	330	1/16W
R305	NRSA63D-331X	M.G.RESISTOR	330	1/16W
R306	NRSA63D-331X	M.G.RESISTOR	330	1/16W
R307	NRSA63D-331X	M.G.RESISTOR	330	1/16W
R308	NRSA63D-221X	M.G.RESISTOR	220	1/16W
R310	NRSA63D-562X	M.G.RESISTOR	5.6k	1/16W
R311	NRSA63D-473X	M.G.RESISTOR	47k	1/16W
R312	NRSA63D-392X	M.G.RESISTOR	3.9k	1/16W
R313	NRSA63D-102X	M.G.RESISTOR	1k	1/16W
R314	NRSA63D-102X	M.G.RESISTOR	1k	1/16W
R315	NRSA63D-103X	M.G.RESISTOR	10k	1/16W
R316	NRSA63D-561X	M.G.RESISTOR	560	1/16W
R317	NRSA63D-153X	M.G.RESISTOR	15k	1/16W

[MAIN]

Symbol No.	Part No.	Part Name	Description	
R318	NRSA63D-103X	M.G.RESISTOR	10k	1/16W
R319	NRSA63D-103X	M.G.RESISTOR	10k	1/16W
R320	NRSA63D-201X	M.G.RESISTOR	200	1/16W
R321	NRSA63D-101X	M.G.RESISTOR	100	1/16W
R325	NRSA63D-301X	M.G.RESISTOR	300	1/16W
R326	NRSA63D-331X	M.G.RESISTOR	330	1/16W
R327	NRSA63D-102X	M.G.RESISTOR	1k	1/16W
R328	NRSA63D-102X	M.G.RESISTOR	1k	1/16W
R329	NRSA63D-331X	M.G.RESISTOR	330	1/16W
R330	NRSA63D-331X	M.G.RESISTOR	330	1/16W
R331	NRSA63D-331X	M.G.RESISTOR	330	1/16W
R332	NRSA63D-331X	M.G.RESISTOR	330	1/16W
R333	NRSA63D-221X	M.G.RESISTOR	220	1/16W
R334	NRSA63D-393X	M.G.RESISTOR	39k	1/16W
R335	NRSA63D-562X	M.G.RESISTOR	5.6k	1/16W
R336	NRSA63D-473X	M.G.RESISTOR	47k	1/16W
R337	NRSA63D-392X	M.G.RESISTOR	3.9k	1/16W
R338	NRSA63D-102X	M.G.RESISTOR	1k	1/16W
R339	NRSA63D-102X	M.G.RESISTOR	1k	1/16W
R340	NRSA63D-103X	M.G.RESISTOR	10k	1/16W
R341	NRSA63D-561X	M.G.RESISTOR	560	1/16W
R342	NRSA63D-153X	M.G.RESISTOR	15k	1/16W
R343	NRSA63D-103X	M.G.RESISTOR	10k	1/16W
R344	NRSA63D-103X	M.G.RESISTOR	10k	1/16W
R345	NRSA63D-201X	M.G.RESISTOR	200	1/16W
R350	NRSA63D-101X	M.G.RESISTOR	100	1/16W
R351	NRSA63D-104X	M.G.RESISTOR	100k	1/16W
R352	NRSA63D-102X	M.G.RESISTOR	1k	1/16W
R353	NRSA63D-331X	M.G.RESISTOR	330	1/16W
R354	NRSA63D-331X	M.G.RESISTOR	330	1/16W
R355	NRSA63D-331X	M.G.RESISTOR	330	1/16W
R356	NRSA63D-331X	M.G.RESISTOR	330	1/16W
R357	NRSA63D-221X	M.G.RESISTOR	220	1/16W
R359	NRSA63D-562X	M.G.RESISTOR	5.6k	1/16W
R360	NRSA63D-473X	M.G.RESISTOR	47k	1/16W
R361	NRSA63D-392X	M.G.RESISTOR	3.9k	1/16W
R362	NRSA63D-102X	M.G.RESISTOR	1k	1/16W
R363	NRSA63D-102X	M.G.RESISTOR	1k	1/16W
R364	NRSA63D-103X	M.G.RESISTOR	10k	1/16W
R365	NRSA63D-561X	M.G.RESISTOR	560	1/16W
R366	NRSA63D-153X	M.G.RESISTOR	15k	1/16W
R367	NRSA63D-103X	M.G.RESISTOR	10k	1/16W
R368	NRSA63D-103X	M.G.RESISTOR	10k	1/16W
R369	NRSA63D-201X	M.G.RESISTOR	200	1/16W
R371	NRSA63D-560X	M.G.RESISTOR	56	1/16W
R372	NRSA63J-0R0X	M.G.RESISTOR	0	1/16W
R373	NRSA63J-0R0X	M.G.RESISTOR	0	1/16W
R374	NRSA63J-0R0X	M.G.RESISTOR	0	1/16W
R375	NRSA63D-560X	M.G.RESISTOR	56	1/16W
R376	NRSA63D-560X	M.G.RESISTOR	56	1/16W
R377	NRSA63D-101X	M.G.RESISTOR	100	1/16W
R378	NRSA63D-101X	M.G.RESISTOR	100	1/16W
R379	NRSA63D-102X	M.G.RESISTOR	1k	1/16W
R380	NRSA63D-223X	M.G.RESISTOR	22k	1/16W
R381	NRSA63D-223X	M.G.RESISTOR	22k	1/16W
R382	NRSA63D-223X	M.G.RESISTOR	22k	1/16W
R383	NRSA63D-102X	M.G.RESISTOR	1k	1/16W
R384	NRSA63D-103X	M.G.RESISTOR	10k	1/16W
R386	NRSA63D-101X	M.G.RESISTOR	100	1/16W
R387	NRSA63D-272X	M.G.RESISTOR	2.7k	1/16W
R388	NRSA63D-471X	M.G.RESISTOR	470	1/16W
R389	NRSA63D-471X	M.G.RESISTOR	470	1/16W
R390	NRSA63D-272X	M.G.RESISTOR	2.7k	1/16W
R391	NRSA63D-471X	M.G.RESISTOR	470	1/16W
R392	NRSA63D-471X	M.G.RESISTOR	470	1/16W
R393	NRSA63D-391X	M.G.RESISTOR	390	1/16W
R394	NRSA63D-561X	M.G.RESISTOR	560	1/16W
R395	NRSA63D-472X	M.G.RESISTOR	4.7k	1/16W
R396	NRSA63D-512X	M.G.RESISTOR	5.1k	1/16W
R397	NRSA63D-391X	M.G.RESISTOR	390	1/16W
R398	NRSA63D-391X	M.G.RESISTOR	390	1/16W
R399	NRSA63D-391X	M.G.RESISTOR	390	1/16W
R402	NRSA63D-821X	M.G.RESISTOR	820	1/16W

Symbol No.	Part No.	Part Name	Description	
R404	NRSA63D-102X	M.G.RESISTOR	1k	1/16W
R405	NRSA63D-102X	M.G.RESISTOR	1k	1/16W
R406	NRSA63J-0R0X	M.G.RESISTOR	0	1/16W
R407	NRSA63J-0R0X	M.G.RESISTOR	0	1/16W
R408	NRSA63D-333X	M.G.RESISTOR	33k	1/16W
R409	NRSA63D-431X	M.G.RESISTOR	430	1/16W
R410	NRSA63D-431X	M.G.RESISTOR	430	1/16W
R411	NRSA63D-102X	M.G.RESISTOR	1k	1/16W
R412	NRSA63D-752X	M.G.RESISTOR	7.5k	1/16W (U)
R413	NRSA63D-333X	M.G.RESISTOR	33k	1/16W (U)
R416	NRSA63D-821X	M.G.RESISTOR	820	1/16W
R417	NRSA63D-102X	M.G.RESISTOR	1k	1/16W
R418	NRSA63D-102X	M.G.RESISTOR	1k	1/16W
R419	NRSA63D-332X	M.G.RESISTOR	3.3k	1/16W
R420	NRSA02J-750X	M.G.RESISTOR	75	1/10W
R422	NRSA63D-472X	M.G.RESISTOR	4.7k	1/16W
R423	NRSA63D-104X	M.G.RESISTOR	100k	1/16W
R424	NRSA63D-394X	M.G.RESISTOR	390k	1/16W
R425	NRSA63D-682X	M.G.RESISTOR	6.8k	1/16W (U)
	NRSA63D-562X	M.G.RESISTOR	5.6k	1/16W (E)
R426	NRSA63D-393X	M.G.RESISTOR	39k	1/16W (U)
	NRSA63D-823X	M.G.RESISTOR	82k	1/16W (E)
R427	NRSA63D-563X	M.G.RESISTOR	56k	1/16W (U)
R430	NRSA63D-681X	M.G.RESISTOR	680	1/16W
R431	NRSA63D-103X	M.G.RESISTOR	10k	1/16W
R432	NRSA63D-102X	M.G.RESISTOR	1k	1/16W
R433	NRSA63J-0R0X	M.G.RESISTOR	0	1/16W
R434	NRSA63J-0R0X	M.G.RESISTOR	0	1/16W
R435	NRSA63D-333X	M.G.RESISTOR	33k	1/16W
R436	NRSA63D-152X	M.G.RESISTOR	1.5k	1/16W
R437	NRSA63D-102X	M.G.RESISTOR	1k	1/16W
R440	NRSA63D-333X	M.G.RESISTOR	33k	1/16W (U)
R441	NRSA63D-682X	M.G.RESISTOR	6.8k	1/16W (U)
R443	NRSA63D-681X	M.G.RESISTOR	680	1/16W
R444	NRSA63D-103X	M.G.RESISTOR	10k	1/16W
R445	NRSA63D-102X	M.G.RESISTOR	1k	1/16W
R446	NRSA63J-0R0X	M.G.RESISTOR	0	1/16W
R447	NRSA63J-0R0X	M.G.RESISTOR	0	1/16W
R448	NRSA63D-333X	M.G.RESISTOR	33k	1/16W
R449	NRSA63D-102X	M.G.RESISTOR	1k	1/16W
R450	NRSA63D-102X	M.G.RESISTOR	1k	1/16W
R453	NRSA63D-333X	M.G.RESISTOR	33k	1/16W (U)
R454	NRSA63D-562X	M.G.RESISTOR	5.6k	1/16W (U)
R455	NRSA63D-472X	M.G.RESISTOR	4.7k	1/16W
R459	NRSA63D-472X	M.G.RESISTOR	4.7k	1/16W (U)
R460	NRSA63D-222X	M.G.RESISTOR	2.2k	1/16W
R461	NRSA63D-222X	M.G.RESISTOR	2.2k	1/16W
R462	NRSA63D-222X	M.G.RESISTOR	2.2k	1/16W
R463	NRSA63D-561X	M.G.RESISTOR	560	1/16W
R464	NRSA63D-333X	M.G.RESISTOR	33k	1/16W
R465	NRSA63D-101X	M.G.RESISTOR	100	1/16W
R466	NRSA63D-681X	M.G.RESISTOR	680	1/16W
R468	NRSA63D-152X	M.G.RESISTOR	1.5k	1/16W
R469	NRSA63D-562X	M.G.RESISTOR	5.6k	1/16W
R470	NRSA63D-562X	M.G.RESISTOR	5.6k	1/16W
R471	NRSA63D-272X	M.G.RESISTOR	2.7k	1/16W
R474	NRSA63D-221X	M.G.RESISTOR	220	1/16W
R475	NRSA63J-0R0X	M.G.RESISTOR	0	1/16W
R476	NRSA63J-0R0X	M.G.RESISTOR	0	1/16W
R478	NRSA63D-222X	M.G.RESISTOR	2.2k	1/16W
R479	NRSA63D-222X	M.G.RESISTOR	2.2k	1/16W
R480	NRSA63D-222X	M.G.RESISTOR	2.2k	1/16W
R481	NRSA63D-561X	M.G.RESISTOR	560	1/16W
R482	NRSA63D-333X	M.G.RESISTOR	33k	1/16W
R483	NRSA63D-102X	M.G.RESISTOR	1k	1/16W
R484	NRSA63D-101X	M.G.RESISTOR	100	1/16W
R486	NRSA63D-152X	M.G.RESISTOR	1.5k	1/16W
R487	NRSA63D-562X	M.G.RESISTOR	5.6k	1/16W
R488	NRSA63D-562X	M.G.RESISTOR	5.6k	1/16W
R489	NRSA63D-272X	M.G.RESISTOR	2.7k	1/16W
R492	NRSA63D-221X	M.G.RESISTOR	220	1/16W
R493	NRSA63J-0R0X	M.G.RESISTOR	0	1/16W
R494	NRSA63J-0R0X	M.G.RESISTOR	0	1/16W

Symbol No.	Part No.	Part Name	Description	
R497	NRSA63D-182X	M.G.RESISTOR	1.8k	1/16W
R498	NRSA63D-122X	M.G.RESISTOR	1.2k	1/16W
R499	NRSA63D-221X	M.G.RESISTOR	220	1/16W
R500	NRSA63D-122X	M.G.RESISTOR	1.2k	1/16W
R501	NRSA63D-102X	M.G.RESISTOR	1k	1/16W
R502	NRSA63D-104X	M.G.RESISTOR	100k	1/16W
R503	NRSA63D-153X	M.G.RESISTOR	15k	1/16W
R504	NRSA63D-183X	M.G.RESISTOR	18k	1/16W
R506	NRSA63J-0R0X	M.G.RESISTOR	0	1/16W
R509	NRSA63D-104X	M.G.RESISTOR	100k	1/16W
R510	NRSA63D-822X	M.G.RESISTOR	8.2k	1/16W
R511	NRSA63D-103X	M.G.RESISTOR	10k	1/16W
R512	NRSA63D-101X	M.G.RESISTOR	100	1/16W (U)
	NRSA63D-223X	M.G.RESISTOR	22k	1/16W (E)
R513	NRSA63D-223X	M.G.RESISTOR	22k	1/16W
R514	NRSA63D-223X	M.G.RESISTOR	22k	1/16W
R515	NRSA63D-562X	M.G.RESISTOR	5.6k	1/16W
R516	NRSA63D-101X	M.G.RESISTOR	100	1/16W
R517	NRSA63D-562X	M.G.RESISTOR	5.6k	1/16W
R518	NRSA63D-821X	M.G.RESISTOR	820	1/16W
R519	NRSA63D-821X	M.G.RESISTOR	820	1/16W
R520	NRSA63J-0R0X	M.G.RESISTOR	0	1/16W
R521	NRSA63D-392X	M.G.RESISTOR	3.9k	1/16W
R522	NRSA63D-682X	M.G.RESISTOR	6.8k	1/16W
R523	NRSA63D-102X	M.G.RESISTOR	1k	1/16W
R524	NRSA63D-560X	M.G.RESISTOR	56	1/16W
R525	NRSA63D-333X	M.G.RESISTOR	33k	1/16W
R530	NRSA63D-102X	M.G.RESISTOR	1k	1/16W
R531	NRSA63D-103X	M.G.RESISTOR	10k	1/16W
R532	NRSA63D-103X	M.G.RESISTOR	10k	1/16W
R533	NRSA63D-103X	M.G.RESISTOR	10k	1/16W
R535	NRSA63D-101X	M.G.RESISTOR	100	1/16W
R536	NRSA63D-101X	M.G.RESISTOR	100	1/16W
R538	NRSA63D-560X	M.G.RESISTOR	56	1/16W
R539	NRSA63D-101X	M.G.RESISTOR	100	1/16W
R540	NRSA63D-101X	M.G.RESISTOR	100	1/16W
R541	NRSA63D-101X	M.G.RESISTOR	100	1/16W
R542	NRSA63D-560X	M.G.RESISTOR	56	1/16W
R543	NRSA63D-101X	M.G.RESISTOR	100	1/16W
R544	NRSA63D-101X	M.G.RESISTOR	100	1/16W
R545	NRSA63D-101X	M.G.RESISTOR	100	1/16W
R546	NRSA63D-101X	M.G.RESISTOR	100	1/16W
R547	NRSA63D-101X	M.G.RESISTOR	100	1/16W
R548	NRSA63D-273X	M.G.RESISTOR	27k	1/16W
R549	NRSA63D-103X	M.G.RESISTOR	10k	1/16W
R550	NRSA63J-0R0X	M.G.RESISTOR	0	1/16W (E)
R551	NRSA63J-0R0X	M.G.RESISTOR	0	1/16W (U)
R552	NRSA63D-101X	M.G.RESISTOR	100	1/16W
R553	NRSA63D-472X	M.G.RESISTOR	4.7k	1/16W (U)
	NRSA63D-473X	M.G.RESISTOR	47k	1/16W (E)
R554	NRSA63D-103X	M.G.RESISTOR	10k	1/16W
R555	NRSA63D-103X	M.G.RESISTOR	10k	1/16W
R556	NRSA63D-103X	M.G.RESISTOR	10k	1/16W
R557	NRSA63J-105X	M.G.RESISTOR	1M	1/16W (E)
R558	NRSA63D-563X	M.G.RESISTOR	56k	1/16W
R559	NRSA63D-473X	M.G.RESISTOR	47k	1/16W
R560	NRSA63D-222X	M.G.RESISTOR	2.2k	1/16W
R561	NRSA63D-563X	M.G.RESISTOR	56k	1/16W
R562	NRSA63D-273X	M.G.RESISTOR	27k	1/16W
R563	NRSA63D-333X	M.G.RESISTOR	33k	1/16W
R564	NRSA63D-273X	M.G.RESISTOR	27k	1/16W
R565	NRSA63D-104X	M.G.RESISTOR	100k	1/16W
R566	NRSA63D-222X	M.G.RESISTOR	2.2k	1/16W
R567	NRSA63D-122X	M.G.RESISTOR	1.2k	1/16W
R568	NRSA63D-102X	M.G.RESISTOR	1k	1/16W
R569	NRSA63D-222X	M.G.RESISTOR	2.2k	1/16W
R570	NRSA63D-564X	M.G.RESISTOR	560k	1/16W
R571	NRSA63D-331X	M.G.RESISTOR	330	1/16W
R572	NRSA63D-682X	M.G.RESISTOR	6.8k	1/16W
R573	NRSA63D-223X	M.G.RESISTOR	22k	1/16W
R574	NRSA63D-223X	M.G.RESISTOR	22k	1/16W
R575	NRSA63D-101X	M.G.RESISTOR	100	1/16W
R577	NRSA63D-563X	M.G.RESISTOR	56k	1/16W

Symbol No.	Part No.	Part Name	Description	
R578	NRSA63D-563X	M.G.RESISTOR	56k	1/16W
R579	NRSA63D-333X	M.G.RESISTOR	33k	1/16W
R580	NRSA63D-333X	M.G.RESISTOR	33k	1/16W
R582	NRSA63D-153X	M.G.RESISTOR	15k	1/16W
R583	NRSA63D-182X	M.G.RESISTOR	1.8k	1/16W
R584	NRSA63D-182X	M.G.RESISTOR	1.8k	1/16W
R589	NRSA63D-472X	M.G.RESISTOR	4.7k	1/16W (U)
R590	NRSA63D-472X	M.G.RESISTOR	4.7k	1/16W (U)
R591	NRSA63D-472X	M.G.RESISTOR	4.7k	1/16W
R592	NRSA63D-472X	M.G.RESISTOR	4.7k	1/16W
R593	NRSA63D-681X	M.G.RESISTOR	680	1/16W
R594	NRSA63D-103X	M.G.RESISTOR	10k	1/16W
R595	NRSA63D-472X	M.G.RESISTOR	4.7k	1/16W
R596	NRSA63D-682X	M.G.RESISTOR	6.8k	1/16W
R597	NRSA63D-103X	M.G.RESISTOR	10k	1/16W
R598	NRSA63D-682X	M.G.RESISTOR	6.8k	1/16W
R599	NRSA63D-103X	M.G.RESISTOR	10k	1/16W
R602	NRSA63J-0R0X	M.G.RESISTOR	0	1/16W (U)
R603	NRSA63J-0R0X	M.G.RESISTOR	0	1/16W (U)
R604	NRSA63D-102X	M.G.RESISTOR	1k	1/16W
R605	NRSA63D-102X	M.G.RESISTOR	1k	1/16W
R606	NRSA63D-101X	M.G.RESISTOR	100	1/16W
R607	NRSA63D-101X	M.G.RESISTOR	100	1/16W
R608	NRSA63J-0R0X	M.G.RESISTOR	0	1/16W
R609	NRSA63J-0R0X	M.G.RESISTOR	0	1/16W
R700	NRSA63D-103X	M.G.RESISTOR	10k	1/16W
R701	NRSA63D-103X	M.G.RESISTOR	10k	1/16W
R702	NRSA63D-103X	M.G.RESISTOR	10k	1/16W
R703	NRSA63D-103X	M.G.RESISTOR	10k	1/16W
R704	NRSA63D-222X	M.G.RESISTOR	2.2k	1/16W
R705	NRSA63D-681X	M.G.RESISTOR	680	1/16W
R706	NRSA63D-272X	M.G.RESISTOR	2.7k	1/16W
R707	NRSA63D-561X	M.G.RESISTOR	560	1/16W
R708	NRSA63D-391X	M.G.RESISTOR	390	1/16W
R709	NRSA63D-823X	M.G.RESISTOR	82k	1/16W
R710	NRSA63D-333X	M.G.RESISTOR	33k	1/16W
R711	NRSA63D-154X	M.G.RESISTOR	150k	1/16W
R712	NRSA63D-154X	M.G.RESISTOR	150k	1/16W
R713	NRSA63D-392X	M.G.RESISTOR	3.9k	1/16W
R715	NRSA63D-101X	M.G.RESISTOR	100	1/16W
R716	NRSA63D-473X	M.G.RESISTOR	47k	1/16W
R718	NRSA63D-101X	M.G.RESISTOR	100	1/16W
R719	NRSA63D-101X	M.G.RESISTOR	100	1/16W
R720	NRSA63D-331X	M.G.RESISTOR	330	1/16W
R721	NRSA63D-331X	M.G.RESISTOR	330	1/16W
R722	NRSA63D-331X	M.G.RESISTOR	330	1/16W
R723	NRSA63D-331X	M.G.RESISTOR	330	1/16W
R724	NRSA63J-0R0X	M.G.RESISTOR	0	1/16W
R725	NRSA63D-223X	M.G.RESISTOR	22k	1/16W
R726	NRSA63D-470X	M.G.RESISTOR	47	1/16W
R727	NRSA63D-101X	M.G.RESISTOR	100	1/16W
R728	NRSA63D-101X	M.G.RESISTOR	100	1/16W
R729	NRSA63D-331X	M.G.RESISTOR	330	1/16W
R730	NRSA63D-331X	M.G.RESISTOR	330	1/16W
R731	NRSA63D-331X	M.G.RESISTOR	330	1/16W
R732	NRSA63D-331X	M.G.RESISTOR	330	1/16W
R733	NRSA63D-101X	M.G.RESISTOR	100	1/16W
R734	NRSA63J-0R0X	M.G.RESISTOR	0	1/16W
R735	NRSA63D-223X	M.G.RESISTOR	22k	1/16W
R736	NRSA63D-470X	M.G.RESISTOR	47	1/16W
R737	NRSA63D-101X	M.G.RESISTOR	100	1/16W
R738	NRSA63D-101X	M.G.RESISTOR	100	1/16W
R739	NRSA63D-471X	M.G.RESISTOR	470	1/16W
R740	NRSA63D-471X	M.G.RESISTOR	470	1/16W
R741	NRSA63D-473X	M.G.RESISTOR	47k	1/16W
R742	NRSA63J-0R0X	M.G.RESISTOR	0	1/16W
R743	NRSA63D-103X	M.G.RESISTOR	10k	1/16W
R744	NRSA63J-0R0X	M.G.RESISTOR	0	1/16W
R745	NRSA63D-101X	M.G.RESISTOR	100	1/16W
R746	NRSA63D-101X	M.G.RESISTOR	100	1/16W
R747	NRSA63D-101X	M.G.RESISTOR	100	1/16W
R748	NRSA63D-101X	M.G.RESISTOR	100	1/16W

[MAIN]

Symbol No.	Part No.	Part Name	Description
R749	NRSA63D-101X	M.G.RESISTOR	100 1/16W
R750	NRSA63D-101X	M.G.RESISTOR	100 1/16W
R751	NRSA63D-101X	M.G.RESISTOR	100 1/16W
R752	NRSA63D-101X	M.G.RESISTOR	100 1/16W
R753	NRSA63D-101X	M.G.RESISTOR	100 1/16W
R754	NRSA63D-101X	M.G.RESISTOR	100 1/16W
R755	NRSA63D-101X	M.G.RESISTOR	100 1/16W
R756	NRSA63D-101X	M.G.RESISTOR	100 1/16W
R757	NRSA63D-101X	M.G.RESISTOR	100 1/16W
R758	NRSA63D-103X	M.G.RESISTOR	10k 1/16W
R759	NRSA63D-103X	M.G.RESISTOR	10k 1/16W
R760	NRSA63D-103X	M.G.RESISTOR	10k 1/16W
R761	NRSA63D-103X	M.G.RESISTOR	10k 1/16W
R762	NRSA63D-103X	M.G.RESISTOR	10k 1/16W
R763	NRSA63D-334X	M.G.RESISTOR	330k 1/16W
R764	NRSA63D-184X	M.G.RESISTOR	180k 1/16W
R765	NRSA63D-684X	M.G.RESISTOR	680k 1/16W
R766	NRSA63D-513X	M.G.RESISTOR	51k 1/16W
R767	NRSA63D-334X	M.G.RESISTOR	330k 1/16W
R768	NRSA63D-184X	M.G.RESISTOR	180k 1/16W
R769	NRSA63D-684X	M.G.RESISTOR	680k 1/16W
R770	NRSA63D-513X	M.G.RESISTOR	51k 1/16W
R771	NRSA63D-560X	M.G.RESISTOR	56 1/16W
R902	NRSA63D-103X	M.G.RESISTOR	10k 1/16W
R912	NRSA63D-472X	M.G.RESISTOR	4.7k 1/16W
R913	NRSA63D-472X	M.G.RESISTOR	4.7k 1/16W
R914	NRSA63D-103X	M.G.RESISTOR	10k 1/16W
R915	NRSA63D-103X	M.G.RESISTOR	10k 1/16W
R916	NRSA63D-103X	M.G.RESISTOR	10k 1/16W
R917	NRSA63D-103X	M.G.RESISTOR	10k 1/16W
R918	NRSA63D-102X	M.G.RESISTOR	1k 1/16W
R919	NRSA63D-102X	M.G.RESISTOR	1k 1/16W
R920	NRSA63J-0R0X	M.G.RESISTOR	0 1/16W
R922	NRSA63D-101X	M.G.RESISTOR	100 1/16W
VR401	NVP1415-102X	TRIM.RESISTOR	1k Y
VR402	NVP1415-102X	TRIM.RESISTOR	1k B-Y BAL
VR403	NVP1415-102X	TRIM.RESISTOR	1k R-Y BAL
VR404	NVP1415-102X	TRIM.RESISTOR	1k R-Y BAL2 (E)
VR405	NVP1415-501X	TRIM.RESISTOR	500 CHROMA
VR406	NVP1415-203X	TRIM.RESISTOR	20k FSC
VR407	NVP1415-102X	TRIM.RESISTOR	1k B-Y BAL2 (E)
C1	NBE51AM-476X	TAN.CAPACITOR	47 10V
C2	NBE51AM-476X	TAN.CAPACITOR	47 10V
C3	NBE71CM-476X	TAN.CAPACITOR	47 16V
C4	NBE71CM-476X	TAN.CAPACITOR	47 16V
C5	NCB11CK-105X	CER.CAPACITOR	1 16V
C6	NCB21EK-104X	CER.CAPACITOR	0.1 25V
C7	NBE71CM-476X	TAN.CAPACITOR	47 16V
C8	NCB11CK-105X	CER.CAPACITOR	1 16V
C101	NCB31CK-473X	CER.CAPACITOR	0.047 16V
C102	NDC31HJ-120X	CER.CAPACITOR	12p 50V
C103	NCB31HK-103X	CER.CAPACITOR	0.01 50V
C104	NCB31CK-473X	CER.CAPACITOR	0.047 16V
C105	NCB31CK-473X	CER.CAPACITOR	0.047 16V
C106	NDC31HJ-220X	CER.CAPACITOR	22p 50V
C107	NDC31HJ-220X	CER.CAPACITOR	22p 50V
C108	NCB31CK-473X	CER.CAPACITOR	0.047 16V
C109	NCB31CK-473X	CER.CAPACITOR	0.047 16V
C110	NCB31CK-473X	CER.CAPACITOR	0.047 16V
C111	NCB10JM-335X	CER.CAPACITOR	3.3 6.3V
C112	NCB10JM-335X	CER.CAPACITOR	3.3 6.3V
C113	NCB31CK-473X	CER.CAPACITOR	0.047 16V
C114	NDC31HJ-471X	CER.CAPACITOR	470p 50V
C115	NCB10JM-335X	CER.CAPACITOR	3.3 6.3V
C116	NCB10JM-335X	CER.CAPACITOR	3.3 6.3V
C117	NCB31CK-473X	CER.CAPACITOR	0.047 16V
C118	NCB31CK-473X	CER.CAPACITOR	0.047 16V
C119	NCB31CK-473X	CER.CAPACITOR	0.047 16V
C120	NCB31CK-473X	CER.CAPACITOR	0.047 16V
C121	NCB31CK-473X	CER.CAPACITOR	0.047 16V
C122	NCB31CK-473X	CER.CAPACITOR	0.047 16V

Symbol No.	Part No.	Part Name	Description
C124	NCB31CK-473X	CER.CAPACITOR	0.047 16V
C125	NCB31CK-473X	CER.CAPACITOR	0.047 16V
C126	NCB31CK-473X	CER.CAPACITOR	0.047 16V
C127	NCB31CK-473X	CER.CAPACITOR	0.047 16V
C128	NCB31CK-473X	CER.CAPACITOR	0.047 16V
C201	NDC31HJ-180X	CER.CAPACITOR	18p 50V
C202	NDC31HJ-7R0X	CER.CAPACITOR	7p 50V
C203	NCB31HK-103X	CER.CAPACITOR	0.01 50V
C204	NBE51AM-476X	TAN.CAPACITOR	47 10V
C205	NBE51AM-476X	TAN.CAPACITOR	47 10V
C206	NCB31CK-473X	CER.CAPACITOR	0.047 16V
C207	NCB31CK-473X	CER.CAPACITOR	0.047 16V
C208	NCB31CK-473X	CER.CAPACITOR	0.047 16V
C209	NCB31CK-473X	CER.CAPACITOR	0.047 16V
C210	NCB31CK-473X	CER.CAPACITOR	0.047 16V
C211	NCB31CK-473X	CER.CAPACITOR	0.047 16V
C212	NCB31CK-473X	CER.CAPACITOR	0.047 16V
C213	NCB31CK-473X	CER.CAPACITOR	0.047 16V
C214	NCB31HK-103X	CER.CAPACITOR	0.01 50V
C215	NCB31CK-473X	CER.CAPACITOR	0.047 16V
C216	NCB31CK-473X	CER.CAPACITOR	0.047 16V
C217	NCB31CK-473X	CER.CAPACITOR	0.047 16V
C218	NCB31CK-473X	CER.CAPACITOR	0.047 16V
C219	NCB10JM-335X	CER.CAPACITOR	3.3 6.3V
C220	NCB31CK-473X	CER.CAPACITOR	0.047 16V
C221	NCB31CK-473X	CER.CAPACITOR	0.047 16V
C222	NCB31CK-473X	CER.CAPACITOR	0.047 16V
C223	NCB10JM-335X	CER.CAPACITOR	3.3 6.3V
C224	NCB10JM-335X	CER.CAPACITOR	3.3 6.3V
C225	NCB31CK-473X	CER.CAPACITOR	0.047 16V
C226	NCB31CK-473X	CER.CAPACITOR	0.047 16V
C227	NCB31HK-103X	CER.CAPACITOR	0.01 50V
C228	NCB10JM-335X	CER.CAPACITOR	3.3 6.3V
C229	NCB31CK-473X	CER.CAPACITOR	0.047 16V
C230	NCB31CK-473X	CER.CAPACITOR	0.047 16V
C231	NBE51AM-476X	TAN.CAPACITOR	47 10V
C232	NBE51AM-476X	TAN.CAPACITOR	47 10V
C233	NCB31CK-473X	CER.CAPACITOR	0.047 16V
C234	NCB31CK-473X	CER.CAPACITOR	0.047 16V
C235	NCB31CK-473X	CER.CAPACITOR	0.047 16V
C236	NCB31CK-473X	CER.CAPACITOR	0.047 16V
C237	NCB31CK-473X	CER.CAPACITOR	0.047 16V
C238	NCB31CK-473X	CER.CAPACITOR	0.047 16V
C239	NCB31CK-473X	CER.CAPACITOR	0.047 16V
C240	NCB31CK-473X	CER.CAPACITOR	0.047 16V
C241	NCB10JM-335X	CER.CAPACITOR	3.3 6.3V
C242	NCB31CK-473X	CER.CAPACITOR	0.047 16V
C243	NCB31CK-473X	CER.CAPACITOR	0.047 16V
C244	NCB31CK-473X	CER.CAPACITOR	0.047 16V
C245	NCB31CK-473X	CER.CAPACITOR	0.047 16V
C246	NCB31CK-473X	CER.CAPACITOR	0.047 16V
C247	NCB31CK-473X	CER.CAPACITOR	0.047 16V
C248	NCB31CK-473X	CER.CAPACITOR	0.047 16V
C249	NBE51AM-476X	TAN.CAPACITOR	47 10V
C250	NBE51AM-476X	TAN.CAPACITOR	47 10V
C251	NCB31CK-473X	CER.CAPACITOR	0.047 16V
C252	NCB31CK-473X	CER.CAPACITOR	0.047 16V
C253	NCB31CK-473X	CER.CAPACITOR	0.047 16V
C254	NCB31CK-473X	CER.CAPACITOR	0.047 16V
C255	NCB31CK-473X	CER.CAPACITOR	0.047 16V
C256	NCB31CK-473X	CER.CAPACITOR	0.047 16V
C257	NCB31CK-473X	CER.CAPACITOR	0.047 16V
C258	NCB31CK-473X	CER.CAPACITOR	0.047 16V
C259	NBE51AM-476X	TAN.CAPACITOR	47 10V
C260	NBE51AM-476X	TAN.CAPACITOR	47 10V
C261	NCB31CK-473X	CER.CAPACITOR	0.047 16V
C262	NCB31CK-473X	CER.CAPACITOR	0.047 16V
C263	NCB31CK-473X	CER.CAPACITOR	0.047 16V
C264	NCB31CK-473X	CER.CAPACITOR	0.047 16V
C265	NCB31CK-473X	CER.CAPACITOR	0.047 16V
C266	NCB31CK-473X	CER.CAPACITOR	0.047 16V
C267	NCB31CK-473X	CER.CAPACITOR	0.047 16V
C268	NCB31CK-473X	CER.CAPACITOR	0.047 16V

Symbol No.	Part No.	Part Name	Description	
C269	NCB31HK-103X	CER.CAPACITOR	0.01	50V
C270	NCB10JM-335X	CER.CAPACITOR	3.3	6.3V
C271	NBE51AM-476X	TAN.CAPACITOR	47	10V
C272	NCB31CK-473X	CER.CAPACITOR	0.047	16V
C273	NCB31CK-473X	CER.CAPACITOR	0.047	16V
C274	NCB31CK-473X	CER.CAPACITOR	0.047	16V
C275	NCB31CK-473X	CER.CAPACITOR	0.047	16V
C276	NCB31CK-473X	CER.CAPACITOR	0.047	16V
C277	NCB31CK-473X	CER.CAPACITOR	0.047	16V
C278	NCB31CK-473X	CER.CAPACITOR	0.047	16V
C279	NCB31CK-473X	CER.CAPACITOR	0.047	16V
C280	NBE51AM-476X	TAN.CAPACITOR	47	10V
C281	NCB31HK-103X	CER.CAPACITOR	0.01	50V
C282	NCB10JM-335X	CER.CAPACITOR	3.3	6.3V
C283	NBE51AM-476X	TAN.CAPACITOR	47	10V
C284	NCB31CK-473X	CER.CAPACITOR	0.047	16V
C285	NCB31CK-473X	CER.CAPACITOR	0.047	16V
C286	NCB31CK-473X	CER.CAPACITOR	0.047	16V
C287	NCB31CK-473X	CER.CAPACITOR	0.047	16V
C288	NCB31CK-473X	CER.CAPACITOR	0.047	16V
C289	NCB31CK-473X	CER.CAPACITOR	0.047	16V
C290	NCB31CK-473X	CER.CAPACITOR	0.047	16V
C291	NCB31CK-473X	CER.CAPACITOR	0.047	16V
C292	NBE51AM-476X	TAN.CAPACITOR	47	10V
C293	NCB31HK-103X	CER.CAPACITOR	0.01	50V
C294	NCB31HK-103X	CER.CAPACITOR	0.01	50V
C295	NCB31CK-473X	CER.CAPACITOR	0.047	16V
C298	NDC31HJ-680X	CER.CAPACITOR	68p	50V
C301	NCB10JM-335X	CER.CAPACITOR	3.3	6.3V
C302	NBE41CM-106X	TAN.CAPACITOR	10	16V
C303	NCB31CK-473X	CER.CAPACITOR	0.047	16V
C304	NCB31CK-473X	CER.CAPACITOR	0.047	16V
C305	NCB10JM-335X	CER.CAPACITOR	3.3	6.3V
C306	NBE41CM-106X	TAN.CAPACITOR	10	16V
C307	NCB31CK-473X	CER.CAPACITOR	0.047	16V
C308	NCB31CK-473X	CER.CAPACITOR	0.047	16V
C309	NCB21AK-105X	CER.CAPACITOR	1	10V
C310	NCB21AK-105X	CER.CAPACITOR	1	10V
C311	NCB31CK-473X	CER.CAPACITOR	0.047	16V
C312	NCB10JM-335X	CER.CAPACITOR	3.3	6.3V
C313	NBE51AM-476X	TAN.CAPACITOR	47	10V
C314	NCB10JM-335X	CER.CAPACITOR	3.3	6.3V
C315	NCB31CK-473X	CER.CAPACITOR	0.047	16V
C316	NCB31CK-473X	CER.CAPACITOR	0.047	16V
C317	NCB31CK-473X	CER.CAPACITOR	0.047	16V
C318	NCB31CK-473X	CER.CAPACITOR	0.047	16V
C319	NCB10JM-335X	CER.CAPACITOR	3.3	6.3V
C320	NCB31CK-473X	CER.CAPACITOR	0.047	16V
C321	NCB31CK-473X	CER.CAPACITOR	0.047	16V
C322	NCB31HK-103X	CER.CAPACITOR	0.01	50V
C325	NCB10JM-335X	CER.CAPACITOR	3.3	6.3V
C326	NBE41CM-106X	TAN.CAPACITOR	10	16V
C327	NCB31CK-473X	CER.CAPACITOR	0.047	16V
C328	NCB31CK-473X	CER.CAPACITOR	0.047	16V
C329	NCB10JM-335X	CER.CAPACITOR	3.3	6.3V
C330	NBE41CM-106X	TAN.CAPACITOR	10	16V
C331	NCB31CK-473X	CER.CAPACITOR	0.047	16V
C332	NCB31CK-473X	CER.CAPACITOR	0.047	16V
C333	NCB21AK-105X	CER.CAPACITOR	1	10V
C334	NCB21AK-105X	CER.CAPACITOR	1	10V
C335	NCB31CK-473X	CER.CAPACITOR	0.047	16V
C336	NCB31CK-473X	CER.CAPACITOR	0.047	16V
C337	NCB31CK-473X	CER.CAPACITOR	0.047	16V
C338	NCB10JM-335X	CER.CAPACITOR	3.3	6.3V
C339	NCB31CK-473X	CER.CAPACITOR	0.047	16V
C340	NCB31CK-473X	CER.CAPACITOR	0.047	16V
C341	NCB31CK-473X	CER.CAPACITOR	0.047	16V
C342	NCB31CK-473X	CER.CAPACITOR	0.047	16V
C343	NCB10JM-335X	CER.CAPACITOR	3.3	6.3V
C344	NCB31CK-473X	CER.CAPACITOR	0.047	16V
C345	NCB31CK-473X	CER.CAPACITOR	0.047	16V
C350	NCB10JM-335X	CER.CAPACITOR	3.3	6.3V
C351	NBE41CM-106X	TAN.CAPACITOR	10	16V

Symbol No.	Part No.	Part Name	Description	
C352	NCB31CK-473X	CER.CAPACITOR	0.047	16V
C353	NCB31CK-473X	CER.CAPACITOR	0.047	16V
C354	NCB10JM-335X	CER.CAPACITOR	3.3	6.3V
C355	NBE41CM-106X	TAN.CAPACITOR	10	16V
C356	NCB31CK-473X	CER.CAPACITOR	0.047	16V
C357	NCB31CK-473X	CER.CAPACITOR	0.047	16V
C358	NCB31CK-473X	CER.CAPACITOR	0.047	16V
C359	NCB31CK-473X	CER.CAPACITOR	0.047	16V
C360	NCB21AK-105X	CER.CAPACITOR	1	10V
C361	NCB21AK-105X	CER.CAPACITOR	1	10V
C362	NCB31CK-473X	CER.CAPACITOR	0.047	16V
C363	NCB10JM-335X	CER.CAPACITOR	3.3	6.3V
C364	NCB31CK-473X	CER.CAPACITOR	0.047	16V
C365	NCB31CK-473X	CER.CAPACITOR	0.047	16V
C366	NCB31CK-473X	CER.CAPACITOR	0.047	16V
C367	NCB31CK-473X	CER.CAPACITOR	0.047	16V
C368	NCB10JM-335X	CER.CAPACITOR	3.3	6.3V
C369	NCB31CK-473X	CER.CAPACITOR	0.047	16V
C370	NCB31CK-473X	CER.CAPACITOR	0.047	16V
C373	NCB31CK-473X	CER.CAPACITOR	0.047	16V
C374	NCB31CK-473X	CER.CAPACITOR	0.047	16V
C375	NCB10JM-335X	CER.CAPACITOR	3.3	6.3V
C376	NCB31CK-473X	CER.CAPACITOR	0.047	16V
C377	NCB31CK-473X	CER.CAPACITOR	0.047	16V
C378	NCB31HK-103X	CER.CAPACITOR	0.01	50V
C379	NCB31HK-103X	CER.CAPACITOR	0.01	50V
C380	NCB31CK-473X	CER.CAPACITOR	0.047	16V
C381	NCB31CK-473X	CER.CAPACITOR	0.047	16V
C382	NCB31CK-473X	CER.CAPACITOR	0.047	16V
C383	NCB31CK-473X	CER.CAPACITOR	0.047	16V
C384	NCB10JM-335X	CER.CAPACITOR	3.3	6.3V
C385	NCB31CK-473X	CER.CAPACITOR	0.047	16V
C386	NCB31CK-473X	CER.CAPACITOR	0.047	16V
C387	NCB31CK-473X	CER.CAPACITOR	0.047	16V
C388	NCB31CK-473X	CER.CAPACITOR	0.047	16V
C389	NCB31CK-473X	CER.CAPACITOR	0.047	16V
C390	NCB31CK-473X	CER.CAPACITOR	0.047	16V
C391	NBE51AM-476X	TAN.CAPACITOR	47	10V
C392	NCB31CK-473X	CER.CAPACITOR	0.047	16V
C393	NCB31CK-473X	CER.CAPACITOR	0.047	16V
C394	NCB31CK-473X	CER.CAPACITOR	0.047	16V
C395	NCB31CK-473X	CER.CAPACITOR	0.047	16V
C396	NCB31CK-473X	CER.CAPACITOR	0.047	16V
C397	NCB31CK-473X	CER.CAPACITOR	0.047	16V
C398	NCB31CK-473X	CER.CAPACITOR	0.047	16V
C399	NCB31CK-473X	CER.CAPACITOR	0.047	16V
C401	NCB10JM-335X	CER.CAPACITOR	3.3	6.3V
C402	NBE71CM-476X	TAN.CAPACITOR	47	16V
C403	NBE71CM-476X	TAN.CAPACITOR	47	16V
C404	NCB10JM-335X	CER.CAPACITOR	3.3	6.3V
C405	NBE71CM-476X	TAN.CAPACITOR	47	16V
C406	NBE71CM-476X	TAN.CAPACITOR	47	16V
C407	NCB31CK-473X	CER.CAPACITOR	0.047	16V
C408	NCB31CK-473X	CER.CAPACITOR	0.047	16V
C410	NCB31CK-104X	CER.CAPACITOR	0.1	16V
C412	NCB31CK-473X	CER.CAPACITOR	0.047	16V
C413	NCB31CK-473X	CER.CAPACITOR	0.047	16V
C414	NCB31CK-473X	CER.CAPACITOR	0.047	16V
C415	NCB31CK-473X	CER.CAPACITOR	0.047	16V
C416	NCB31CK-473X	CER.CAPACITOR	0.047	16V
C417	NCB31CK-473X	CER.CAPACITOR	0.047	16V
C418	NCB31CK-104X	CER.CAPACITOR	0.1	16V
C419	NCB31CK-473X	CER.CAPACITOR	0.047	16V
C420	NCB31CK-473X	CER.CAPACITOR	0.047	16V
C421	NCB31CK-473X	CER.CAPACITOR	0.047	16V
C423	NCB31CK-473X	CER.CAPACITOR	0.047	16V
C424	NCB31CK-473X	CER.CAPACITOR	0.047	16V
C425	NCB31CK-104X	CER.CAPACITOR	0.1	16V
C426	NCB31CK-473X	CER.CAPACITOR	0.047	16V
C427	NCB31CK-473X	CER.CAPACITOR	0.047	16V
C429	NCB31CK-473X	CER.CAPACITOR	0.047	16V
C430	NCB31CK-473X	CER.CAPACITOR	0.047	16V
C432	NCB31CK-104X	CER.CAPACITOR	0.1	16V

[MAIN]

Symbol No.	Part No.	Part Name	Description	
C433	NCB31CK-473X	CER.CAPACITOR	0.047	16V
C434	NCB31CK-473X	CER.CAPACITOR	0.047	16V
C439	NCB31CK-473X	CER.CAPACITOR	0.047	16V (U)
C440	NDC31HJ-121X	CER.CAPACITOR	120p	50V
C441	NDC31HJ-270X	CER.CAPACITOR	27p	50V
C442	NCB31CK-473X	CER.CAPACITOR	0.047	16V
C443	NCB31CK-473X	CER.CAPACITOR	0.047	16V
C444	NFV41HJ-104X	FILM CAPACITOR	0.1	50V
C445	NCB31CK-473X	CER.CAPACITOR	0.047	16V
C446	NCB31CK-473X	CER.CAPACITOR	0.047	16V
C447	NCB11CK-105X	CER.CAPACITOR	1	16V
C448	NCB31HK-103X	CER.CAPACITOR	0.01	50V
C449	NCB31CK-473X	CER.CAPACITOR	0.047	16V
C450	NCB31CK-473X	CER.CAPACITOR	0.047	16V
C451	NCB31HK-103X	CER.CAPACITOR	0.01	50V
C453	NCB31HK-103X	CER.CAPACITOR	0.01	50V
C454	NDC31HJ-121X	CER.CAPACITOR	120p	50V
C455	NDC31HJ-270X	CER.CAPACITOR	27p	50V
C456	NCB31CK-473X	CER.CAPACITOR	0.047	16V
C457	NCB31CK-473X	CER.CAPACITOR	0.047	16V
C458	NFV41HJ-104X	FILM CAPACITOR	0.1	50V
C459	NCB31CK-473X	CER.CAPACITOR	0.047	16V
C460	NCB31CK-473X	CER.CAPACITOR	0.047	16V
C461	NCB31CK-473X	CER.CAPACITOR	0.047	16V
C462	NCB31CK-473X	CER.CAPACITOR	0.047	16V
C463	NCB31CK-473X	CER.CAPACITOR	0.047	16V
C464	NCB31HK-103X	CER.CAPACITOR	0.01	50V
C465	NDC31HJ-7R0X	CER.CAPACITOR	7p	50V
C466	NCB31HK-103X	CER.CAPACITOR	0.01	50V
C467	NCB31CK-473X	CER.CAPACITOR	0.047	16V
C468	NCB31CK-473X	CER.CAPACITOR	0.047	16V
C469	NCB31CK-473X	CER.CAPACITOR	0.047	16V
C470	NCB31CK-473X	CER.CAPACITOR	0.047	16V
C473	NCB31CK-473X	CER.CAPACITOR	0.047	16V
C474	NCB31CK-473X	CER.CAPACITOR	0.047	16V
C476	NCB31CK-473X	CER.CAPACITOR	0.047	16V
C477	NCB31CK-473X	CER.CAPACITOR	0.047	16V
C478	NCB31CK-473X	CER.CAPACITOR	0.047	16V
C479	NCB31CK-473X	CER.CAPACITOR	0.047	16V
C480	NCB10JM-335X	CER.CAPACITOR	3.3	6.3V
C481	NCB10JM-335X	CER.CAPACITOR	3.3	6.3V
C482	NCB31CK-473X	CER.CAPACITOR	0.047	16V
C483	NCB31CK-473X	CER.CAPACITOR	0.047	16V
C484	NCB31CK-473X	CER.CAPACITOR	0.047	16V
C485	NCB31CK-473X	CER.CAPACITOR	0.047	16V
C486	NBE21EM-474X	TAN.CAPACITOR	0.47	25V
C488	NCB31CK-473X	CER.CAPACITOR	0.047	16V
C490	NCB31CK-473X	CER.CAPACITOR	0.047	16V
C491	NCB31CK-473X	CER.CAPACITOR	0.047	16V
C492	NCB31CK-473X	CER.CAPACITOR	0.047	16V
C493	NCB31HK-103X	CER.CAPACITOR	0.01	50V
C494	NCB11CK-105X	CER.CAPACITOR	1	16V
C495	NBE41CM-106X	TAN.CAPACITOR	10	16V
C496	NCB31CK-473X	CER.CAPACITOR	0.047	16V
C497	NCB31CK-473X	CER.CAPACITOR	0.047	16V
C498	NCB31CK-104X	CER.CAPACITOR	0.1	16V
C499	NCB31CK-473X	CER.CAPACITOR	0.047	16V
C501	NCB31CK-473X	CER.CAPACITOR	0.047	16V
C502	NDC31HJ-330X	CER.CAPACITOR	33p	50V
C503	NCB31EK-473X	CER.CAPACITOR	0.047	25V
C504	NCB31EK-473X	CER.CAPACITOR	0.047	25V
C505	NCB31CK-473X	CER.CAPACITOR	0.047	16V
C506	NDC31HJ-560X	CER.CAPACITOR	56p	50V
C507	NCB31CK-473X	CER.CAPACITOR	0.047	16V
C508	NCB10JM-335X	CER.CAPACITOR	3.3	6.3V
C509	NCB10JM-335X	CER.CAPACITOR	3.3	6.3V
C510	NCB10JM-335X	CER.CAPACITOR	3.3	6.3V
C511	NCB10JM-335X	CER.CAPACITOR	3.3	6.3V
C512	NDC31HJ-151X	CER.CAPACITOR	150p	50V (U)
	NDC31HJ-121X	CER.CAPACITOR	120p	50V (E)
C513	NDC31HJ-151X	CER.CAPACITOR	150p	50V (U)
	NDC31HJ-121X	CER.CAPACITOR	120p	50V (E)
C514	NCB31CK-473X	CER.CAPACITOR	0.047	16V

Symbol No.	Part No.	Part Name	Description	
C515	NCB31CK-473X	CER.CAPACITOR	0.047	16V
C517	NCB31CK-473X	CER.CAPACITOR	0.047	16V
C518	NCB31CK-473X	CER.CAPACITOR	0.047	16V
C519	NCB31CK-473X	CER.CAPACITOR	0.047	16V
C520	NDC31HJ-220X	CER.CAPACITOR	22p	50V
C521	NCB31CK-473X	CER.CAPACITOR	0.047	16V
C523	NCB31HK-103X	CER.CAPACITOR	0.01	50V
C524	NCB21AK-105X	CER.CAPACITOR	1	10V
C525	NBE71CM-476X	TAN.CAPACITOR	47	16V
C526	NCB31CK-473X	CER.CAPACITOR	0.047	16V
C527	NCB31CK-473X	CER.CAPACITOR	0.047	16V
C529	NCB10JM-335X	CER.CAPACITOR	3.3	6.3V
C530	NCB31CK-473X	CER.CAPACITOR	0.047	16V
C541	NDC31HJ-330X	CER.CAPACITOR	33p	50V
C542	NDC31HJ-330X	CER.CAPACITOR	33p	50V
C543	NDC31HJ-330X	CER.CAPACITOR	33p	50V
C546	NCB31CK-104X	CER.CAPACITOR	0.1	16V
C547	NDC31HJ-220X	CER.CAPACITOR	22p	50V (U)
	NDC31HJ-330X	CER.CAPACITOR	33p	50V (E)
C548	NCB31CK-104X	CER.CAPACITOR	0.1	16V
C549	NCB31CK-104X	CER.CAPACITOR	0.1	16V
C552	NCB31CK-473X	CER.CAPACITOR	0.047	16V
C700	NCB31CK-473X	CER.CAPACITOR	0.047	16V
C701	NCB31CK-473X	CER.CAPACITOR	0.047	16V
C702	NCB31CK-473X	CER.CAPACITOR	0.047	16V
C703	NCB31CK-473X	CER.CAPACITOR	0.047	16V
C704	NBE51AM-476X	TAN.CAPACITOR	47	10V
C705	NCB31CK-473X	CER.CAPACITOR	0.047	16V
C706	NCB31CK-473X	CER.CAPACITOR	0.047	16V
C707	NCB31CK-473X	CER.CAPACITOR	0.047	16V
C708	NCB10JM-335X	CER.CAPACITOR	3.3	6.3V
C709	NEH61CM-106X	E.CAPACITOR	10	16V
C710	NEH61CM-106X	E.CAPACITOR	10	16V
C711	NEH71HM-225X	E.CAPACITOR	2.2	50V
C712	NEH71HM-225X	E.CAPACITOR	2.2	50V
C713	NCB31CK-104X	CER.CAPACITOR	0.1	16V
C714	NCB31HK-682X	CER.CAPACITOR	6800p	50V
C715	NDC31HJ-180X	CER.CAPACITOR	18p	50V
C716	NCB31CK-104X	CER.CAPACITOR	0.1	16V
C717	NCB10JM-335X	CER.CAPACITOR	3.3	6.3V
C718	NCB31HK-103X	CER.CAPACITOR	0.01	50V
C719	NCB31HK-103X	CER.CAPACITOR	0.01	50V
C720	NCB31HK-103X	CER.CAPACITOR	0.01	50V
C721	NCB21AK-105X	CER.CAPACITOR	1	10V
C722	NDC31HJ-180X	CER.CAPACITOR	18p	50V
C723	NDC31HJ-180X	CER.CAPACITOR	18p	50V
C724	NCB31CK-473X	CER.CAPACITOR	0.047	16V
C725	NCB31CK-473X	CER.CAPACITOR	0.047	16V
C726	NCB31CK-473X	CER.CAPACITOR	0.047	16V
C728	NCB31CK-473X	CER.CAPACITOR	0.047	16V
C729	NBE51AM-476X	TAN.CAPACITOR	47	10V
C730	NCB31CK-473X	CER.CAPACITOR	0.047	16V
C731	NCB31CK-473X	CER.CAPACITOR	0.047	16V
C732	NCB31CK-473X	CER.CAPACITOR	0.047	16V
C733	NCB31CK-473X	CER.CAPACITOR	0.047	16V
C735	NCB31CK-473X	CER.CAPACITOR	0.047	16V
C736	NCB31CK-473X	CER.CAPACITOR	0.047	16V
C737	NCB31CK-473X	CER.CAPACITOR	0.047	16V
C738	NCB31CK-104X	CER.CAPACITOR	0.1	16V
C739	NCB10JM-335X	CER.CAPACITOR	3.3	6.3V
C740	NCB31CK-104X	CER.CAPACITOR	0.1	16V
C741	NCB10JM-335X	CER.CAPACITOR	3.3	6.3V
C742	NCB10JM-335X	CER.CAPACITOR	3.3	6.3V
C743	NCB31CK-104X	CER.CAPACITOR	0.1	16V
C744	NCB10JM-335X	CER.CAPACITOR	3.3	6.3V
C745	NCB31CK-104X	CER.CAPACITOR	0.1	16V
C746	NFV41HJ-152X	FILM CAPACITOR	1500p	50V
C747	NFV41HJ-152X	FILM CAPACITOR	1500p	50V
C748	NCB31CK-104X	CER.CAPACITOR	0.1	16V
C749	NCB10JM-335X	CER.CAPACITOR	3.3	6.3V
C750	NCB31CK-104X	CER.CAPACITOR	0.1	16V
C751	NCB10JM-335X	CER.CAPACITOR	3.3	6.3V
C752	NCB10JM-335X	CER.CAPACITOR	3.3	6.3V

Symbol No.	Part No.	Part Name	Description
C753	NCB31CK-104X	CER.CAPACITOR	0.1 16V
C754	NCB10JM-335X	CER.CAPACITOR	3.3 6.3V
C755	NCB31CK-104X	CER.CAPACITOR	0.1 16V
C756	NFV41HJ-152X	FILM CAPACITOR	1500p 50V
C757	NFV41HJ-152X	FILM CAPACITOR	1500p 50V
C758	NBE41CM-106X	TAN.CAPACITOR	10 16V
C759	NBE41CM-106X	TAN.CAPACITOR	10 16V
C760	NCB31CK-104X	CER.CAPACITOR	0.1 16V
C761	NCB10JM-335X	CER.CAPACITOR	3.3 6.3V
C762	NCB10JM-335X	CER.CAPACITOR	3.3 6.3V
C763	NCB31CK-104X	CER.CAPACITOR	0.1 16V
C764	NBE41CM-106X	TAN.CAPACITOR	10 16V
C765	NCB31CK-104X	CER.CAPACITOR	0.1 16V
C766	NCB10JM-335X	CER.CAPACITOR	3.3 6.3V
C767	NCB31CK-104X	CER.CAPACITOR	0.1 16V
C768	NCB10JM-335X	CER.CAPACITOR	3.3 6.3V
C769	NBE41CM-106X	TAN.CAPACITOR	10 16V
C770	NCB31CK-473X	CER.CAPACITOR	0.047 16V
C771	NDC31HJ-470X	CER.CAPACITOR	47p 50V
C772	NCB10JM-335X	CER.CAPACITOR	3.3 6.3V
C773	NCB10JM-335X	CER.CAPACITOR	3.3 6.3V
C774	NCB10JM-335X	CER.CAPACITOR	3.3 6.3V
C775	NCB10JM-335X	CER.CAPACITOR	3.3 6.3V
C776	NDC31HJ-220X	CER.CAPACITOR	22p 50V
C777	NBE41CM-106X	TAN.CAPACITOR	10 16V
C778	NCB10JM-335X	CER.CAPACITOR	3.3 6.3V
C779	NCB10JM-335X	CER.CAPACITOR	3.3 6.3V
C780	NDC31HJ-220X	CER.CAPACITOR	22p 50V
C781	NBE41CM-106X	TAN.CAPACITOR	10 16V
C782	NCB10JM-335X	CER.CAPACITOR	3.3 6.3V
C783	NCB10JM-335X	CER.CAPACITOR	3.3 6.3V
C784	NCB10JM-335X	CER.CAPACITOR	3.3 6.3V
C801	NBE51AM-476X	TAN.CAPACITOR	47 10V
C802	NBE51AM-476X	TAN.CAPACITOR	47 10V
C803	NCB31CK-473X	CER.CAPACITOR	0.047 16V
C804	NCB31CK-473X	CER.CAPACITOR	0.047 16V
C805	NCB31CK-473X	CER.CAPACITOR	0.047 16V
C806	NCB31CK-473X	CER.CAPACITOR	0.047 16V
C807	NCB31CK-473X	CER.CAPACITOR	0.047 16V
C808	NCB31CK-473X	CER.CAPACITOR	0.047 16V
C809	NCB31CK-473X	CER.CAPACITOR	0.047 16V
C810	NCB31CK-473X	CER.CAPACITOR	0.047 16V
C811	NCB31CK-473X	CER.CAPACITOR	0.047 16V
C812	NCB31CK-473X	CER.CAPACITOR	0.047 16V
C813	NCB31CK-473X	CER.CAPACITOR	0.047 16V
C814	NCB31CK-473X	CER.CAPACITOR	0.047 16V
C815	NCB31CK-473X	CER.CAPACITOR	0.047 16V
C816	NCB31CK-473X	CER.CAPACITOR	0.047 16V
C817	NBE71CM-476X	TAN.CAPACITOR	47 16V
C818	NBE51AM-476X	TAN.CAPACITOR	47 10V
C819	NCB31CK-473X	CER.CAPACITOR	0.047 16V
C820	NCB31CK-473X	CER.CAPACITOR	0.047 16V
C821	NCB31CK-473X	CER.CAPACITOR	0.047 16V
C822	NCB31CK-473X	CER.CAPACITOR	0.047 16V
C823	NBE51AM-476X	TAN.CAPACITOR	47 10V
C824	NCB31CK-473X	CER.CAPACITOR	0.047 16V
C825	NCB31CK-473X	CER.CAPACITOR	0.047 16V
C826	NCB31CK-473X	CER.CAPACITOR	0.047 16V
C827	NCB31CK-473X	CER.CAPACITOR	0.047 16V
C828	NBE51AM-476X	TAN.CAPACITOR	47 10V
C829	NCB31CK-473X	CER.CAPACITOR	0.047 16V
C830	NCB31CK-473X	CER.CAPACITOR	0.047 16V
C831	NCB31CK-473X	CER.CAPACITOR	0.047 16V
C832	NCB31CK-473X	CER.CAPACITOR	0.047 16V
C833	NBE51AM-476X	TAN.CAPACITOR	47 10V
C834	NCB31CK-473X	CER.CAPACITOR	0.047 16V
C835	NCB31CK-473X	CER.CAPACITOR	0.047 16V
C836	NCB31CK-473X	CER.CAPACITOR	0.047 16V
C837	NCB31CK-473X	CER.CAPACITOR	0.047 16V
C838	NCB31CK-473X	CER.CAPACITOR	0.047 16V
C902	NCB31CK-473X	CER.CAPACITOR	0.047 16V
C903	NBE51AM-476X	TAN.CAPACITOR	47 10V
C904	NCB31CK-473X	CER.CAPACITOR	0.047 16V

Symbol No.	Part No.	Part Name	Description
C905	NCB31CK-473X	CER.CAPACITOR	0.047 16V
C906	NCB31CK-473X	CER.CAPACITOR	0.047 16V
C907	NCB31CK-473X	CER.CAPACITOR	0.047 16V
C908	NCB31CK-473X	CER.CAPACITOR	0.047 16V
C909	NBE51AM-476X	TAN.CAPACITOR	47 10V
C910	NCB31CK-473X	CER.CAPACITOR	0.047 16V
C911	NCB31CK-473X	CER.CAPACITOR	0.047 16V
C912	NCB31CK-473X	CER.CAPACITOR	0.047 16V
C913	NCB31CK-473X	CER.CAPACITOR	0.047 16V
C914	NCB10JM-335X	CER.CAPACITOR	3.3 6.3V
C915	NEH90GM-227X	E.CAPACITOR	220 4V
C916	NEH90GM-227X	E.CAPACITOR	220 4V
C917	NCB31CK-473X	CER.CAPACITOR	0.047 16V
C918	NCB31CK-473X	CER.CAPACITOR	0.047 16V
C919	NCB31CK-473X	CER.CAPACITOR	0.047 16V
C920	NCB21AK-105X	CER.CAPACITOR	1 10V
C921	NCB31CK-473X	CER.CAPACITOR	0.047 16V
C922	NCB31CK-473X	CER.CAPACITOR	0.047 16V
C923	NCB31CK-473X	CER.CAPACITOR	0.047 16V
C924	NCB31CK-473X	CER.CAPACITOR	0.047 16V
C925	NCB31CK-473X	CER.CAPACITOR	0.047 16V
C926	NCB21AK-105X	CER.CAPACITOR	1 10V
C927	NCB31CK-473X	CER.CAPACITOR	0.047 16V
C928	NCB21AK-105X	CER.CAPACITOR	1 10V
C929	NCB10JM-335X	CER.CAPACITOR	3.3 6.3V
C930	NCB31CK-473X	CER.CAPACITOR	0.047 16V
C931	NCB31CK-473X	CER.CAPACITOR	0.047 16V
C933	NDC31HJ-220X	CER.CAPACITOR	22p 50V
C934	NDC31HJ-220X	CER.CAPACITOR	22p 50V
C935	NDC31HJ-220X	CER.CAPACITOR	22p 50V
C936	NDC31HJ-101X	CER.CAPACITOR	100p 50V
C940	NCB31CK-473X	CER.CAPACITOR	0.047 16V
C941	NBE51AM-476X	TAN.CAPACITOR	47 10V
C942	NCB31CK-473X	CER.CAPACITOR	0.047 16V
C943	NCB31CK-473X	CER.CAPACITOR	0.047 16V
C944	NCB31CK-473X	CER.CAPACITOR	0.047 16V
C945	NCB10JM-335X	CER.CAPACITOR	3.3 6.3V
C946	NCB31CK-473X	CER.CAPACITOR	0.047 16V
C949	NCB31CK-473X	CER.CAPACITOR	0.047 16V
C950	NCB31CK-473X	CER.CAPACITOR	0.047 16V
C951	NCB31CK-473X	CER.CAPACITOR	0.047 16V
C952	NCB31CK-473X	CER.CAPACITOR	0.047 16V
L101	NQL054K-470X	COIL	47uH
L201	NQL054K-1R2X	COIL	1.2uH
L202	NQL054K-1R2X	COIL	1.2uH
L405	NQL054K-120X	COIL	12uH
L406	NQL054K-120X	COIL	12uH
L701	NQL054K-3R9X	COIL	3.9uH
L702	NQL054K-3R9X	COIL	3.9uH
L703	NQL054K-101X	COIL	100uH
L704	NQL054K-101X	COIL	100uH
LC1	PGZ01972Z	LC FILTER	
LC2	PGZ01972Z	LC FILTER	
LC3	PGZ01972Z	LC FILTER	
LC4	PGZ01972Z	LC FILTER	
LC5	PGZ01972Z	LC FILTER	
LC6	PGZ01972Z	LC FILTER	
LC101	PGZ01972Z	LC FILTER	
LC102	PGZ01972Z	LC FILTER	
LC103	PGZ01972Z	LC FILTER	
LC104	PGZ01972Z	LC FILTER	
LC105	PGZ01972Z	LC FILTER	
LC201	PGZ01972Z	LC FILTER	
LC202	PGZ01972Z	LC FILTER	
LC301	PGZ01972Z	LC FILTER	
LC302	PGZ01972Z	LC FILTER	
LC303	PGZ01972Z	LC FILTER	
LC304	PGZ01972Z	LC FILTER	
LC305	PGZ01972Z	LC FILTER	
LC306	PGZ01972Z	LC FILTER	
LC307	SCV2982-001X	LC FILTER	

6.7 MT BOARD ASSEMBLY PARTS LIST 07

SCK2613-01-00A 07

[MAIN]

Symbol No.	Part No.	Part Name	Description	
LC401	PGZ01972Z	LC FILTER		
LC402	PGZ01972Z	LC FILTER		
LC404	NQR0067-001X	LC FILTER		(U)
	SCV2983-001X	LC FILTER		(E)
LC405	PGZ01972Z	LC FILTER		
LC406	PGZ01972Z	LC FILTER		
LC407	PGZ01972Z	LC FILTER		
LC408	PGZ01972Z	LC FILTER		
LC410	PGZ01972Z	LC FILTER		
LC700	SSV3036-12R3Y	LC FILTER		
LC701	PGZ01972Z	LC FILTER		
LC702	PGZ01972Z	LC FILTER		
X101	QAX0328-001X	CRYSTAL	4.9MHz	
X201	QAX0031-001	CRYSTAL	49.5MHz	
X401	PGZ02139	CRYSTAL	3.579545MHz	(U)
	PGZ02140	CRYSTAL	4.43371875MHz	(E)
X402	QAX0587-001	CRYSTAL		
TH700	NAD0001-103X	THERMISTOR	10k	
S201	NSW0022-002X	DIP SW		
CN1	QGA1201F2-06X	CONNECTOR	6PIN	
CN14	QGA1201F2-14X	CONNECTOR	14PIN	
CN32	QGF1012F1-24X	CONNECTOR	24PIN	
CN43	QGF1012F1-18X	CONNECTOR	18PIN	
CN44	QGF1012F1-14X	CONNECTOR	14PIN	
CN45	QGA1201F2-04X	CONNECTOR	4PIN	
CN46	SCV2850-040X	CONNECTOR	40PIN	
CN56	SSV2615-28	CONNECTOR	28PIN	
CN58	QGA1201F2-03X	CONNECTOR	3PIN	
CN59	QGA1201F2-03X	CONNECTOR	3PIN	
CN60	QGA1201F2-02X	CONNECTOR	2PIN	
FL301	NQR0206-001	FL FILTER		
FL302	SCV2984-001	FL FILTER		
FL303	NQR0206-001	FL FILTER		
FL304	SCV2984-001	FL FILTER		
FL305	NQR0206-001	FL FILTER		
FL306	SCV2984-001	FL FILTER		
FL401	NQR0207-001	FL FILTER		
FL402	NQR0208-001	FL FILTER		
K1	SCV2732-2HM471	FERRITE BEADS		
K2	SCV2732-2HM471	FERRITE BEADS		
K3	SCV2732-2HM471	FERRITE BEADS		
K4	PGZ00354	FERRATE BEADS		
K6	PGZ00354	FERRATE BEADS		
K8	SCV2732-2HM471	FERRITE BEADS		
K9	SCV2732-2HM471	FERRITE BEADS		
K201	SCV2732-2HM471	FERRITE BEADS		
K202	SCV2732-2HM471	FERRITE BEADS		
K203	SCV2732-2HM471	FERRITE BEADS		
K401	SCV2732-2HM471	FERRITE BEADS		
K402	SCV2732-2HM471	FERRITE BEADS		
K700	SCV2732-2HM471	FERRITE BEADS		
K701	SCV2732-2HM471	FERRITE BEADS		

Symbol No.	Part No.	Part Name	Description	
D1	MA143A-X	DIODE	MATSUSHITA	
D2	MA143A-X	DIODE	MATSUSHITA	
D3	MA143A-X	DIODE	MATSUSHITA	
D4	MA143A-X	DIODE	MATSUSHITA	
D5	MA143A-X	DIODE	MATSUSHITA	
VR1	QVQ0029-B53	VAL.RESISTOR	5k	TRACKING
CN2	QGA1201F2-10X	CONNECTOR	10PIN	
CN9	QGA1201F2-11X	CONNECTOR	11PIN	
CN11	SCV0502-001	CONNECTOR	30PIN	
CN12	QGA1201F2-07X	CONNECTOR	7PIN	
CN13	QGA1201F2-14X	CONNECTOR	14PIN	
CN14	QGA1201F2-13X	CONNECTOR	13PIN	
CN15	QGA1201F2-12X	CONNECTOR	12PIN	
CN16	QGA1201F2-15X	CONNECTOR	15PIN	
CN18	QGA2501F1-02	CONNECTOR	2PIN	
CN19	QGA2501F1-05	CONNECTOR	5PIN	
K1	SCV2662-027	FERRITE BEADS		
K2	SCV2662-027	FERRITE BEADS		
K3	SCV2662-027	FERRITE BEADS		
K4	SCV2662-027	FERRITE BEADS		
K5	SCV2662-027	FERRITE BEADS		
K6	SCV2662-027	FERRITE BEADS		
K7	SCV2662-027	FERRITE BEADS		
K8	SCV2662-027	FERRITE BEADS		

6.8 I/O JUNC BOARD ASSEMBLY PARTS LIST [0][8]

SCK2614-01-00A [0][8]□□□□□□□

Symbol No.	Part No.	Part Name	Description
D1	SB140L-6395	DIODE	SANYO
D2	RD9.1EW-T1	ZENER DIODE	NEC
R1	NRSA02J-222X	M.G.RESISTOR	2.2k 1/10W
R2	NRSA02J-100X	M.G.RESISTOR	10 1/10W
R3	NRSA02J-0R0X	M.G.RESISTOR	0 1/10W
R4	NRSA02J-0R0X	M.G.RESISTOR	0
C1	QEHA1EM-228	E.CAPACITOR	2200 25V
LC1	ZJSC-2R2-101-TA	LC FILTER	
LC2	ZJSC-2R2-101-TA	LC FILTER	
LC3	ZJSC-2R2-101-TA	LC FILTER	
LC4	ZJSC-2R2-101-TA	LC FILTER	
LC5	ZJSC-2R2-101-TA	LC FILTER	
LC6	ZJSC-2R2-101-TA	LC FILTER	
LC7	ZJSC-2R2-101-TA	LC FILTER	
LC8	ZJSC-2R2-101-TA	LC FILTER	
CN19	QGA2501C2-05Z	CONNECTOR	5PIN
CN22	QGA2501C2-03Z	CONNECTOR	3PIN
CN33	QGA1501C1-04	CONNECTOR	4PIN
CN35	QGA1501C1-05	CONNECTOR	5PIN
CN36	QGA1501C1-06	CONNECTOR	6PIN
CN41	QGA1501C1-09	CONNECTOR	9PIN
CN62	QGA1501C1-05	CONNECTOR	5PIN
CN63	QGA1501C1-05	CONNECTOR	5PIN
CN64	QGA1501C1-06	CONNECTOR	6PIN
CN301	QGA3901C1-04	CONNECTOR	4PIN
CN302	QGA3901C1-02	CONNECTOR	2PIN
CN303	QGA2001C1-02	CONNECTOR	2PIN
CN304	QGA1501C1-02	CONNECTOR	2PIN
⚠BD1	QMH0013-009	BREAKER	
K1	SCV2662-027	FERRITE BEADS	
K2	SCV2662-027	FERRITE BEADS	
K4	PGZ00354	FERRATE BEADS	
K5	PGZ00354	FERRATE BEADS	
K7	PGZ00354	FERRATE BEADS	
⚠VA1	QAF0025-220	VARISTOR	

6.9 SW1 BOARD ASSEMBLY PARTS LIST [0][9]

SCK2616-01-00A [0][9]□□□□□□□

Symbol No.	Part No.	Part Name	Description
IC1	TC74HC165AF-X	I.C.(M)	TOSHIBA
D1	MA143A-X	DIODE	MATSUSHITA
D2	MA143A-X	DIODE	MATSUSHITA
D3	MA143A-X	DIODE	MATSUSHITA
D4	MA143A-X	DIODE	MATSUSHITA
D5	MA143A-X	DIODE	MATSUSHITA
D7	MA143A-X	DIODE	MATSUSHITA
D8	MA143A-X	DIODE	MATSUSHITA
D9	MA143A-X	DIODE	MATSUSHITA
D10	MA143A-X	DIODE	MATSUSHITA
D11	MA143A-X	DIODE	MATSUSHITA
D12	MA143A-X	DIODE	MATSUSHITA
D13	MA143A-X	DIODE	MATSUSHITA
D14	HZU2BLL-X	ZENER DIODE	HITACHI
R1	NRSA63J-223X	M.G.RESISTOR	22k 1/16W
R2	NRSA63J-223X	M.G.RESISTOR	22k 1/16W
R3	NRSA63J-183X	M.G.RESISTOR	18k 1/16W
R4	NRSA63J-223X	M.G.RESISTOR	22k 1/16W
R5	NRSA63J-334X	M.G.RESISTOR	330k 1/16W
R7	NRSA63J-223X	M.G.RESISTOR	22k 1/16W
R8	NRSA63J-223X	M.G.RESISTOR	22k 1/16W
R9	NRSA63J-223X	M.G.RESISTOR	22k 1/16W
R10	NRSA63J-183X	M.G.RESISTOR	18k 1/16W
R11	NRSA63J-103X	M.G.RESISTOR	10k 1/16W
R12	NRSA63J-562X	M.G.RESISTOR	5.6k 1/16W
R13	NRSA63J-564X	M.G.RESISTOR	560k 1/16W
C1	NCB31CK-473X	CER.CAPACITOR	0.047 16V
S1	QSW0048-001	SWITCH	ZEBRA
S2	QSW0189-001Z	PUSH SWITCH	VTR TRIG
S3	QSW0052-004	SWITCH	ACCU FOCUS/WHIT
CN7	QGA1201C2-10X	CONNECTOR	10PIN
CN8	QGA1201C2-12X	CONNECTOR	12PIN
CN10	QGA1201C2-05X	CONNECTOR	5PIN
K1	SCV2662-027	FERRITE BEADS	
K2	SCV2662-027	FERRITE BEADS	
K4	SCV2662-027	FERRITE BEADS	
K5	SCV2662-027	FERRITE BEADS	
K6	SCV2662-027	FERRITE BEADS	
K7	SCV2662-027	FERRITE BEADS	
K8	SCV2662-027	FERRITE BEADS	
K9	SCV2662-027	FERRITE BEADS	
K10	SCV2662-027	FERRITE BEADS	
VA1	QAF0025-220	VARISTOR	

SECTION 7
PACKING

7.1 PACKING ASSEMBLY [M][7] for DY-90WU/WE

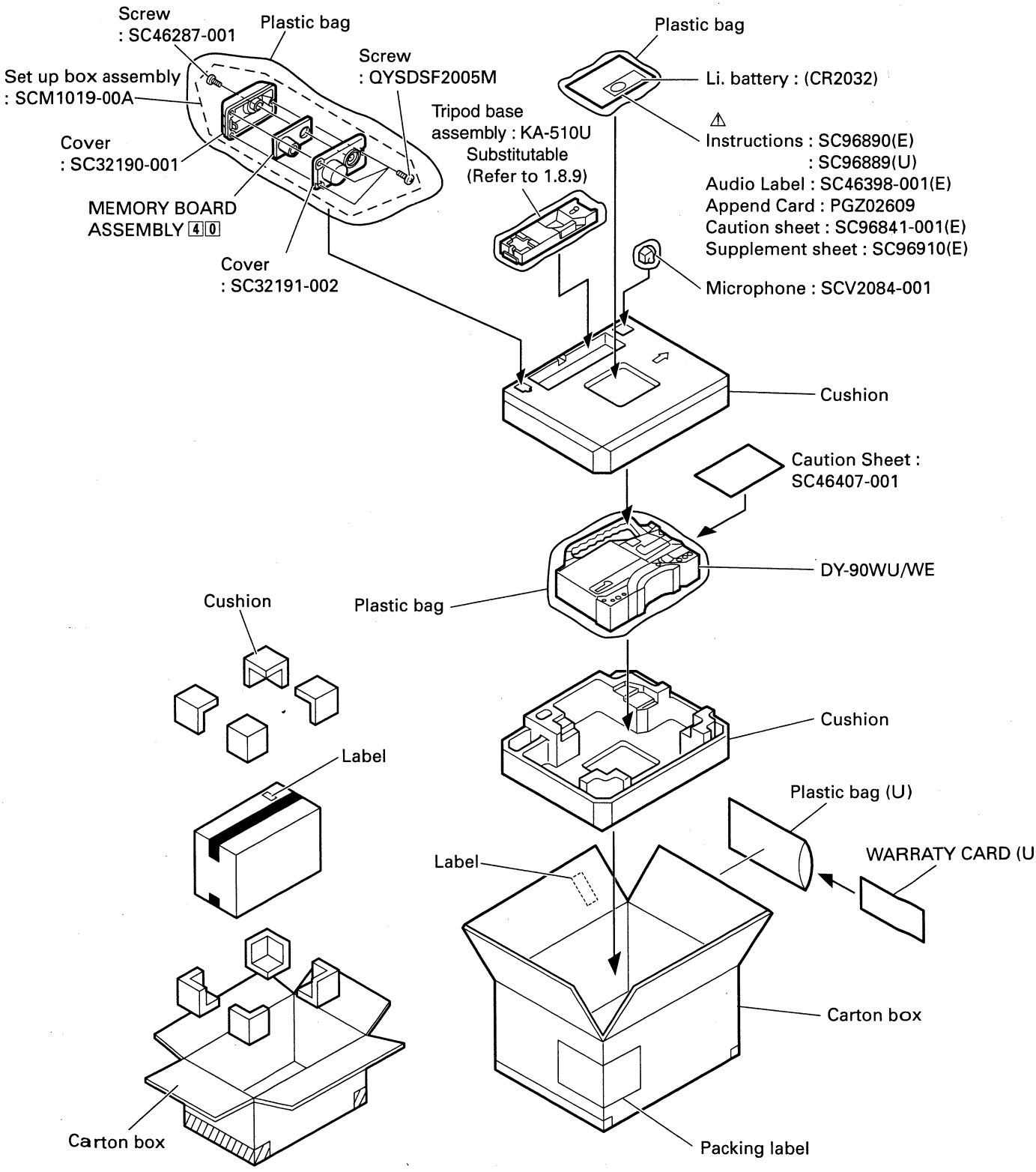

SECTION 8
TECHNICAL INFORMATION

8.1 COMPARISON WITH PREVIOUS MODEL

BASIC SPECIFICATION	DY-90W	DY-90
Pick-up Device	2/3 inch 3 IT CCD	2/3 inch 3 IT CCD
Aspect ratio	4:3/16:9 (Swithable)	4:3 (Fixed)
Number of effective pixels	980H x 494V (NTSC) 980H x 582V (PAL)	768H x 493V (NTSC) 754H x 581V (PAL)
Sensitivity	F11 at 2000 Lux	F11 at 2000 Lux
Optical Filter	3200K, 5600K, 5600K+1/4ND (E-ver.), 5600K+1/16ND, 3200K+Cross effect (U-ver.)	3200K, 5600K, 5600K+1/4ND (E-ver.), 5600K+1/16ND, 3200K+Cross effect (U-ver.)
Minimum Illumination	0.75 Lux with Lolux	0.75 Lux with Lolux
S/N	More than 52 dB (during BR-D80 reproduction with component output)	More than 52 dB (during BR-D80 reproduction with component output)
Horizontal Resolution	500 TV lines (4:3), 375 TV lines (16:9)	
Detail Enhancer	Horizontal : Dual Vertical : Dual	Horizontal : Dual Vertical : Dual
Color Bars	SMPTE type (NTSC) EBU FULL FIELD (PAL)	SMPTE type (NTSC) EBU FULL FIELD (PAL)
White Balance	Preset / AW1 / AW2 / FAW	Preset / AW1 / AW2 / FAW
Electric Shutter (NTSC)	1/60, 1/100, 1/250, 1/500,1/1000, 1/2000	1/60, 1/100, 1/250, 1/500,1/1000, 1/2000
(PAL)	1/50, 1/120, 1/250, 1/500,1/1000, 1/2000	1/50, 1/120, 1/250, 1/500,1/1000, 1/2000
Gain Boost	-3, 0, 6, 9, 12, 18dB, ALC	-3, 0, 6, 9, 12, 18dB, ALC

FUNCTION	DY-90W	DY-90
Full Auto Shooting	Provided	Provided
Variable scan	1/60.1 – 1/2067.0 (S) (NTSC) 1/50.1 – 1/2053.6 (S) (PAL)	1/60.5 – 1/1966.7 (S) (NTSC) 1/50.4 – 1/1953.1 (S) (PAL)
Lolux	Lolux : +33dB Gain	Lolux : +33dB Gain
High Resolution Mode	Normal : 380 TV lines (U), 450 (P) V.Max : 450 TV lines (U), 540 (P)	Normal : 380 TV lines (U), 450 (P) V.Plus : 420 TV lines (U), 500 (P) V.Max : 450 TV lines (U), 540 (P)
ACCU Focus	Built-in	Built-in
Smooth Trans	Built-in	Built-in
Black Stretch	Built-in	Built-in
Black Compress	Built-in	Built-in
Auto Knee	ON/OFF switchable	ON/OFF switchable
Blemish Compensate	Built-in (7 pixels)	Built-in (13 pixels)
DTL H / V Balance	Variable	Variable
DTL Frequency	LOW, MID, HIGH	LOW, MID, HIGH
Color Matrix	User adjustable	Not provided
VF Connector	20 pin	6 pin

Table 8-1-1 Comparison with Previous Model

JVC

SERVICE MANUAL

DIGITAL S CAMCORDER

DY-90U/DY-90E/ DY-90EC/DY-90EC (K)

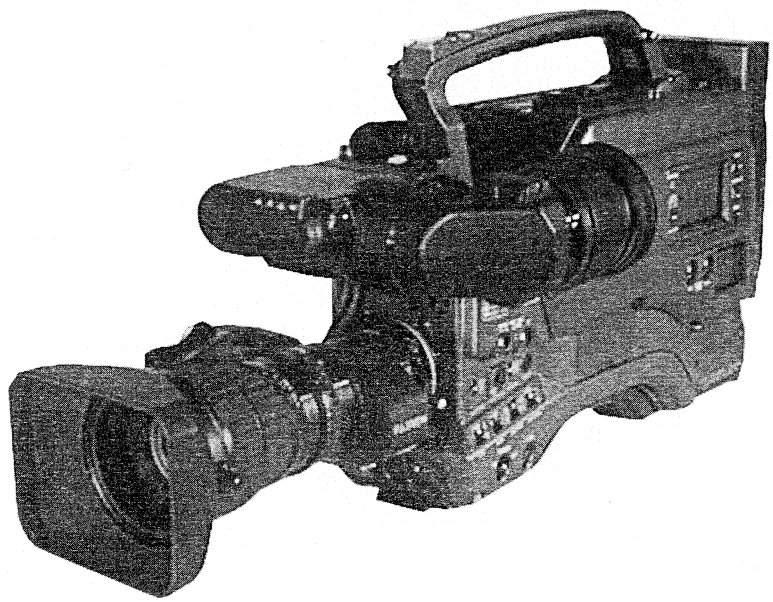

DIGITAL S

The photo shows the DY-90U camcorder with an optional lens and viewfinder.

COPYRIGHT © 1999 VICTOR COMPANY OF JAPAN, LTD.

No. 9360R
February 1999

TABLE OF CONTENTS

Section	Title	Page
1. SERVICE CAUTIONS AND DISASSEMBL		
1.1	REPLACEMENT OF FUSE	1-1
1.2	HOW TO REMOVE THE OUTER CASE	1-2
1.2.1	How to remove the cassette cover	1-2
1.2.2	How to remove the left side cover	1-2
1.2.3	How to open the right side cover	1-2
1.2.4	How to remove the bottom cover	1-2
1.3	HOW TO MAKE A DIAGNOSTICS OF THE BOARD	1-3
1.3.1	Main board layout diagram	1-3
1.4	REMOVING THE OPTICAL FILTER ASSEMBLY	1-4
1.5	DISASSEMBLY OF THE EACH BOARDS IN CAMERA PART	1-5
1.5.1	Disassembly of DR board	1-5
1.5.2	Disassembly of the CP board	1-5
1.5.3	Disassembly of the PS board	1-5
1.6	DISASSEMBLY OF THE EACH BOARDS IN THE VTR PART	1-6
1.6.1	Disassembly of an AUDIO & LCD board	1-6
1.6.2	Disassembly of the MAIN board	1-6
1.6.3	Disassembly of the SS/RFP board	1-6
1.6.4	Disassembly of PR board	1-7
1.6.5	Disassembly for diagnosis of the back side of the main deck	1-7
1.6.6	Disassembly of the I/O JUNC board	1-7
1.7	HOW TO TAKE A CASSETTE OUT IN AN EMERGENCY	1-8
1.8	FUNCTIONS OF INTERNAL SWITCHES	1-8
1.8.1	Dip switch S1 on the CP board have the functions as described below.	1-9
1.8.2	Internal switch on CP board (S14)	1-10
1.8.3	Internal switch on SS/RFP board (S601)	1-10
1.8.4	Internal switch on MAIN board (S201)	1-10
1.8.5	EEPROM	1-10
1.8.6	Displaying version numbers of the ROMs	1-10
1.8.7	SYSTEM RESET	1-10
1.8.8	Detect area of Auto Iris	1-11
1.8.9	Tripod base	1-11
1.9	DIAG MODE	1-12
1.9.1	Structure of DIAG mode	1-12
1.9.2	How To Select Items	1-14
1.9.3	How to end the DIAG mode	1-14
1.9.4	How to set the battery alarm/end detection voltage setting (Group 3)	1-14
1.9.5	How to set the setup menu (Group 4)	1-14
1.9.6	Software version display (Group 5)	1-16
1.9.7	Self-diagnosis mode (Group 6)	1-16
1.9.8	Adjustment mode (Group 7)	1-20
1.9.9	Warning history display	1-23
1.9.10	Service item menu (Group 9)	1-24
1.10	HOW TO DETECT THE ALARM	1-24
1.11	ERROR CODES	1-25
1.12	EEPROM	1-28
1.13	LITHIUM BATTERY	1-28
1.14	OPERATIONS OF SWITCHES AND SENSORS	1-29
1.15	How to adjust the color matrix setting	1-30
1.15.1	How to set the color matrix	1-30
1.15.2	Details of the individual setting items	1-30
2. MECHANISM ADJUSTMENT		
2.1	MECHANISM ADJUSTMENT FLOWCHART	2-1
2.2	REQUIRED MEASURING INSTRUMENTS FOR ADJUSTMENTS, STANDARD SETUP	2-2
2.2.1	Required measuring instruments for adjustments	2-2
2.2.2	Instruments	2-2
2.2.3	General tools for mechanism adjustments	2-2
2.2.4	Procedure to activate DIAG mode	2-2
2.3	BEFORE PROCEEDING TO ADJUSTMENT	2-3
2.3.1	Precautions	2-3
2.3.2	Test point layout for measuring and tracking VR	2-3
2.3.3	Specifications of alignment tape	2-3
2.4	MAINTENANCE AND INSPECTION OF MAIN PARTS	2-4
2.4.1	Main Parts Layout	2-4
2.4.2	Check and maintenance table	2-5
2.4.3	Cleaning	2-6
2.4.4	Oiling and greasing	2-6
2.5	PERIODICAL MAINTENANCE AT EVERY 500 HOURS	2-7
2.5.1	500-hour periodical maintenance flowchart	2-7
2.5.2	Drum assembly replacement	2-8
2.5.3	Head cleaner replacement	2-9
2.6	PERIODICAL MAINTENANCE AT EVERY 1000 HOURS	2-10
2.6.1	1000-hour periodical maintenance flowchart	2-10
2.6.2	Cassette housing assembly replacement	2-11
2.6.3	Belt replacement	2-13
2.6.4	Idler arm assembly replacement	2-13
2.6.5	Take-up tension band assembly replacement	2-14
2.6.6	Supply tension band assembly replacement	2-15
2.6.7	Sub-brake replacement	2-16
2.7	PERIODICAL MAINTENANCE AT EVERY 2000 HOURS	2-19
2.7.1	2000-hour periodical maintenance flowchart	2-19
2.7.2	1st guide roller replacement	2-20
2.7.3	Full erase head guide roller replacement	2-20
2.7.4	Supply tension arm assembly replacement	2-21
2.7.5	Supply pole base assembly and supply loading gear replacement	2-22
2.7.6	Pinch roller assembly	2-26
2.7.7	A/C head replacement	2-27
2.7.8	A/C head guide roller replacement	2-28
2.7.9	Middle guide roller replacement	2-28
2.7.10	Take-up tension arm assembly replacement	2-29
2.7.11	Take-up guide roller, draw pole base assembly and take-up loading assembly replacement	2-30
2.7.12	Timing belt replacement	2-37
2.7.13	Capstan motor replacement	2-38
2.7.14	Reel motor replacement	2-39
2.7.15	Mode motor replacement	2-40
2.7.16	Control cam, roller and pinch cam arm assembly replacement	2-41
2.7.17	Full erase head replacement	2-45
2.7.18	Rubber tire replacement	2-46
2.8	MECHANISM ASSEMBLING POSITION	2-47
2.8.1	Pinch idle gear, connect gear, cam idle gear	2-47
2.8.2	Arm gear (L), loading arms (L) (R), Geneva gear	2-47
2.8.3	Arm gear (R), arm (D)	2-48
2.8.4	Second cam, direction plate	2-48
2.8.5	Pinch roller assembly, cam bracket	2-48
2.9	TENSION AND TORQUE ADJUSTMENTS	2-49
2.10	ADJUSTMENT OF INTERCHANGEABILITY	2-51
2.10.1	Interchange ability adjustment flowchart	2-51
2.10.2	Check of tape transport system	2-52
2.10.3	Interchangeability adjustment	2-53
2.11	A/C HEAD ADJUSTMENTS	2-57
2.12	CHECK OF LINEARITY	2-60
3. ELECTRICAL ADJUSTMENT		
3.1	ELECTRICAL ADJUSTMENT FLOWCHART	3-1
3.1.1	Electrical adjustment flowchart for camera section	3-1
3.1.2	Electrical adjustment flowchart for video section	3-2
3.2	REQUIRED MEASURING INSTRUMENTS FOR ADJUSTMENT, STANDARD SETUP	3-3
3.2.1	Precautions on electrical adjustment	3-3
3.2.2	Test instruments required for adjustment	3-3
3.2.3	Special implements required for adjustment	3-3
3.2.4	Alignment tape specifications	3-4
3.2.5	Standard setup for adjustment (For Camera adjustment)	3-4
3.2.6	Simultaneous display in both viewfinder and monitor	3-5
3.2.7	Adjustment procedure in the adjustment mode	3-5
3.2.8	Service menu	3-6
3.2.9	Potentiometers and test point layout	3-6

Section	Title	Page
3.3	ADJUSTMENT OF CAMERA PART	3-8
3.3.1	SSG adjustment	3-8
3.3.2	ENCODER adjustment	3-8
3.3.3	VIDEO PROCESS adjustment	3-10
3.3.4	CCD driver adjustment	3-14
3.3.5	BLEMISH compensation	3-15
3.4	ADJUSTMENT OF SERVO CIRCUIT	3-15
3.5	ADJUSTMENT OF RF MODULATOR/DEMODULATOR CIRCUIT	3-17
3.6	ADJUSTMENT OF AUDIO CIRCUIT	3-28
3.7	ADJUSTMENT OF S/S CIRCUIT	3-28
4. CHARTS AND DIAGRAMS		
4.1	INDEX TO PAGES OF MAIN BOARDS AND CIRCUIT BOARD LOCATION	4-3
4.1.1	Circuit board location	4-3
4.2	OVERALL WIRING DIAGRAM	4-4
4.3	POWER SYSTEM BLOCK DIAGRAM	4-10
4.4	IS,DR BLOCK DIAGRAM	4-11
4.5	CP BLOCK DIAGRAM	4-12
4.6	MAIN BLOCK DIAGRAM	4-13
4.7	SS/RFP BLOCK DIAGRAM	4-16
4.8	AUDIO & LCD BLOCK DIAGRAM	4-18
4.9	PR BLOCK DIAGRAM	4-20
4.10	DR BOARD INNER PATTERN	4-21
4.11	DR BOARD SCHEMATIC DIAGRAM [01]	4-22
4.12	DR CIRCUIT BOARD	4-23
4.13	ISB/ISG/ISR BOARD SCHEMATIC DIAGRAM [02] / [03] / [04]	4-24
4.14	ISB/ISG/ISR CIRCUIT BOARDS	4-25
4.15N	CP BOARD SCHEMATIC DIAGRAM [05] (ONLY FOR DY-90U)	4-26
4.16N	CP CIRCUIT BOARD (ONLY FOR DY-90U)	4-27
4.15P	CP BOARD SCHEMATIC DIAGRAM [05] (FOR JAPANESE MODEL/PAL MODEL)	4-28
4.16P	CP CIRCUIT BOARD (FOR JAPANESE MODEL/PAL MODEL)	4-29
4.17	MAIN BOARD SCHEMATIC DIAGRAM [06]	4-30
4.18	MAIN CIRCUIT BOARD	4-40
4.19	SS/RFP BOARD SCHEMATIC DIAGRAM [07]	4-44
4.20	SS/RFP CIRCUIT BOARD	4-50
4.21	AUDIO & LCD BOARD SCHEMATIC DIAGRAM [08]	4-54
4.22A	AUDIO & LCD CIRCUIT BOARD	4-61-1
4.22B	AUDIO & LCD CIRCUIT BOARD (FOR SERIAL No.XXXX0053 AND AFTER OF DY-90U)	4-61-2
4.23	PR BOARD SCHEMATIC DIAGRAM [09]	4-63
4.24	PR CIRCUIT BOARD	4-67
4.25	MT BOARD SCHEAMTIC DIAGRAM [10]	4-68
4.26	LCD SUB SCHEMATIC DIAGRAM [11]	4-68
4.27	MT CIRCUIT BOARD	4-69
4.28	LCD SUB CIRCUIT BOARD	4-69
4.29	MIC1[13], MIC2[41], SW1[24], SW4[27], OPERATIN[14], MEMORY[40], CN[38], MEC I/F[15] BOARD SCHEMATIC DIAGRAMS	4-70
4.30	MIC1, SW1, SW4, OPERATION, MEC I/F, MEMORY, CN, LI-BATT, MIC2 CIRCUIT BOARDS	4-71
4.31	I/O JUNC, EAR, SW2, SW3, SW5, SW6, TC.IN, TC.OUT, RM, MOM.OUT, GEN.IN CIRCUIT BOARD & I/O JUNC BOARD SCHEAMTIC DIAGRAM	4-72
4.32	DRUM MDA SCHEMATIC DIAGRAM & CIRCUIT BOARD [16]	4-73
4.33	AL SENSE, TU SENSE, SP SESSE, MODE SENSE, A/C HEAD, BEGIN SENSE, END SENSE CIRCUIT BOARDS	4-73
4.34	PS REFERENCE DIAGRAM	4-74
4.35	IC BLOCK DIAGRAMS	4-75
5. EXPLODED VIEW AND ASSEMBLY LIST		
5.1	CAMERA HEAD ASSEMBLY [M1]	5-3
5.2	CABINET ASSEMBLY [M2]	5-4
5.3	CHASSIS ASSEMBLY [M3]	5-6
5.4	MECHANISM ASSEMBLY [M4]	5-8
5.5	CASSETTE HOUSING ASSEMBLY [M5]	5-11
5.6	RIGHT SIDE COVER ASSEMBLY [M6]	5-12
5.7	BATTERY HOLDER ASSEMBLY [M8] (For DY-90U/EC)	5-14
6. ELECTRICAL PARTS LIST		
6.1	DR BOARD ASSEMBLY PARTS LIST [01]	6-2
6.2	ISB BOARD ASSEMBLY PARTS LIST [02]	6-5
6.3	ISG BOARD ASSEMBLY PARTS LIST [03]	6-6
6.4	ISR BOARD ASSEMBLY PARTS LIST [04]	6-6
6.5	CP BOARD ASSEMBLY PARTS LIST [05]	6-7
6.6	MAIN BOARD ASSEMBLY PARTS LIST [06]	6-9
6.7	SS/RFP BOARD ASSEMBLY PARTS LIST [07]	6-17
6.8	AUDIO&LCD BOARD ASSEMBLY PARTS LIST [08]	6-23
6.9	PR BOARD ASSEMBLY PARTS LIST [09]	6-32
6.10	MT BOARD ASSEMBLY PARTS LIST [10]	6-34
6.11	LCD SUB BOARD ASSEMBLY PARTS LIST [11]	6-34
6.12	I/O JUNC BOARD ASSEMBLY PARTS LIST [12]	6-34
6.13	MIC1 BOARD ASSEMBLY PARTS LIST [13]	6-35
6.14	OPERATION BOARD ASSEMBLY PARTS LIST [14]	6-35
6.15	MEC I/F BOARD ASSEMBLY PARTS LIST [15]	6-35
6.16	MDA BOARD ASSEMBLY PARTS LIST [16]	6-36
6.17	A/C BOARD ASSEMBLY PARTS LIST [17]	6-36
6.18	M.SENS BOARD ASSEMBLY PARTS LIST [18]	6-36
6.19	AL BOARD ASSEMBLY PARTS LIST [19]	6-36
6.20	T.FG BOARD ASSEMBLY PARTS LIST [20]	6-36
6.21	S.FG BOARD ASSEMBLY PARTS LIST [21]	6-36
6.22	B.SENS BOARD ASSEMBLY PARTS LIST [22]	6-36
6.23	E.SENS BOARD ASSEMBLY PARTS LIST [23]	6-37
6.24	SW1 BOARD ASSEMBLY PARTS LIST [24]	6-37
6.25	SW2 BOARD ASSEMBLY PARTS LIST [25]	6-37
6.26	SW3 BOARD ASSEMBLY PARTS LIST [26]	6-37
6.27	SW4 BOARD ASSEMBLY PARTS LIST [27]	6-37
6.28	SW5 BOARD ASSEMBLY PARTS LIST [28]	6-38
6.29	SW6 BOARD ASSEMBLY PARTS LIST [29]	6-38
6.30	TC.IN BOARD ASSEMBLY PARTS LIST [30]	6-38
6.31	TC.OUT BOARD ASSEMBLY PARTS LIST [31]	6-38
6.32	EAR BOARD ASSEMBLY PARTS LIST [32]	6-38
6.33	LI.BATT BOARD ASSEMBLY PARTS LIST [33]	6-38
6.34	GEN.IN BOARD ASSEMBLY PARTS LIST [35]	6-39
6.35	MON.OUT BOARD ASSEMBLY PARTS LIST [36]	6-39
6.36	RM BOARD ASSEMBLY PARTS LIST [37]	6-39
6.37	CN BOARD ASSEMBLY PARTS LIST [38]	6-39
6.38	MEMORY BOARD ASSEMBLY PARTS LIST [40]	6-39
6.39	MIC2 BOARD ASSEMBLY PARTS LIST [41]	6-39
7. PACKING		
7.1	PACKING ASSEMBLY M7 for DY-90U/E	7-1
7.2	PACKING ASSEMBLY M7 for DY-90EC/EC (K)	7-2
7.3	SW & VR SETTING	7-3
7.3.1	SW & VR setting for DY-90E/EC/EC (K)	7-3
7.3.2	SW & VR setting for DY-90U	7-4
8. TECHNICAL INFORMATION		
8.1	COMPARISON WITH PREVIOUS MODEL	8-1
8.1.1	Camera Section	8-1
8.1.2	VCR Section	8-2
8.1.3	Circuit Layout	8-2
8.2	DESCRIPTION OF NEW CIRCUITRY (CAMERA SECTION)	8-3
8.2.1	Video Processor Circuit in the Camera Section	8-3
8.2.2	Signal Processing in DSPIC (MAIN board IC311)	8-8
8.3	VIDEO SYSTEM	8-10
8.3.1	Video Circuit	8-10
8.3.2	Audio Circuit	8-17
8.3.3	System Control & Servo System Circuit	8-20
8.4	DY-90 Function Comparison List Classified by Destination	8-24
8.5	COMPATIBILITY CHART (for SERVICE)	8-25

JVC®

INTRODUCTION

CONTROLS, INDICATORS AND CONNECTORS

BASIC SYSTEM CONNECTIONS AND ADJUSTMENTS

POWER SUPPLY

PREPARATIONS

SETTING AND ADJUSTMENTS BEFORE SHOOTING

SHOOTING OPERATION

PLAYBACK MODE

TIME CODE OPERATION

SETUP MENU

FEATURES OF THE CAMERA SECTION

OTHERS

DIGITAL S CAMCORDER

DY-90

INSTRUCTIONS

DIGITAL S

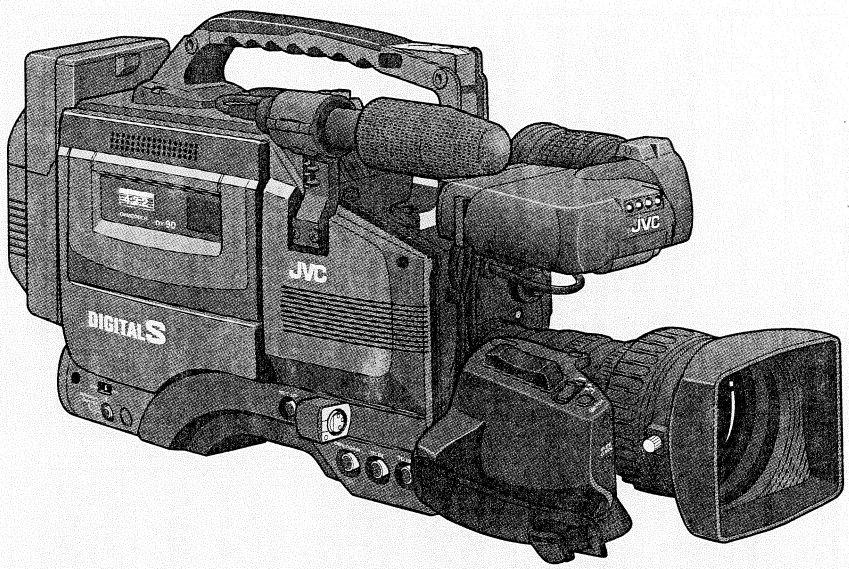

Illust shows the DY-90 camcorder with an optional lens, microphone, mic holder and viewfinder.

This instruction manual was revised in correspondence with service manual of DY-90.

To maintain picture and sound quality, use the exclusive head cleaning cassette after every 20 hours of operation.
For details on head cleaning, refer to page 7.

SC96822 : U-ver.
SC96823 : E-ver.

SAFETY PRECAUTIONS

FOR USA AND CANADA

CAUTION
RISK OF ELECTRIC SHOCK DO NOT OPEN

CAUTION : TO REDUCE THE RISK OF ELECTRIC SHOCK, DO NOT REMOVE COVER (OR BACK). NO USER SERVICEABLE PARTS INSIDE. REFER SERVICING TO QUALIFIED SERVICE PERSONNEL.

The lightning flash with arrowhead symbol, within an equilateral triangle is intended to alert the user to the presence of uninsulated "dangerous voltage" within the product's enclosure that may be of sufficient magnitude to constitute a risk of electric shock to persons.

The exclamation point within an equilateral triangle is intended to alert the user to the presence of important operating and maintenance (servicing) instructions in the literature accompanying the appliance.

INFORMATION FOR USA

INFORMATION

This equipment has been tested and found to comply with the limits for a Class B digital device, pursuant to Part 15 of the FCC Rules. These limits are designed to provide reasonable protection against harmful interference in a residential installation. This equipment generates, uses, and can radiate radio frequency energy and, if not installed and used in accordance with the instructions, may cause harmfull interfrence to radio communications. However, there is no guarantee that interference will not occur in a particular installation. If this equipment does cause harmfu! interference to radio or television reception, which can be determined by turning the equipment off and on, the user is encouraged to try to correct the interference by one or more of the following measures:

- Reorient or relocate the receiving antenna.
- Increase the separation between the equipment and receiver.
- Connect the equipment into an outlet on a circuit different from that to which the receiver is connected.
- Consult the dealer or an experienced radio/TV technician for help.

CAUTION

CHANGES OR MODIFICATIONS NOT APPROVED BY JVC COULD VOID USER'S AUTHORITY TO OPERATE THE EQUIPMENT.

THIS DEVICE COMPLIES WITH PART 15 OF THE FCC RULES. OPERATION IS SUBJECT TO THE FOLLOWING TWO CONDITIONS : (1) THIS DEVICE MAY NOT CAUSE HARMFUL INTERFERENCE, AND (2) THIS DEVICE MUST ACCEPT ANY INTERFERENCE RECEIVED, INCLUDING INTERFERENCE THAT MAY CAUSE UNDESIRED OPERATION

INFORMATION (FOR CANADA)
RENSEIGNEMENT (POUR CANADA)

This Class B digital apparatus meets all requirements of the canadian Interference-Causing Equipment Regulations.

Cet appareil numérique de la classe B respecte toutes les exigences du Réglement sur le matériel brouilleur du Canada.

WARNING:
TO REDUCE THE RISK OF FIRE OR ELECTRIC SHOCK, DO NOT EXPOSE THIS APPLIANCE TO RAIN OR MOISTURE.
This unit should be used with 12V DC only.
CAUTION:
To prevent electric shocks and fire hazards, do NOT use any other power source.

NOTE:
The rating plate (serial number plate) is on the top frame.

CAUTION
To prevent electric shock, do not open the cabinet. No user serviceable parts inside. Refer servicing to qualified service personnel.

AVERTISSEMENT :
POUR EVITER LES RISQUES D'INCENDIE OU D'ELECTROCUTION, NE PAS EXPOSER L'APPAREIL A L'HUMIDITE OU A LA PLUIE.
Ce magnétoscope ne doit être utilisé que sur du courant direct en 12V.
ATTENTION :
Afin d'eviter tout resque d'incendie ou d'électrocution, ne pas utiliser d'autres sources d'alimentation électrique.

REMARQUE :
La plaque d'identification (numéro de série) se trouve sur le panneau arrière de l'appareil.

WARNING ON LITHIUM BATTERY
The battery used in this device may present a fire or chemical burn hazard if mistreated. Do not recharge, disassemble, heat avobe 100°C (212°F) or incinerate.
Replace battery with Matsushita Electric CR2032, use of another battery may present a risk of fire or explosion.
- Dispose of used battery promptly.
- Keep away from children.
- Do not disassemble and do not dispose of in fire.

For Sweden

VARNING
Explosionsfara vid felaktigt batteribyte.
Använd samma batterityp eller en ekvivalent typ som rekommenderas av apparattillverkaren.
Kassera använt batteri enligt fabrikantens instruktion.

For Norway

ADVARSEL
Lithiumbatteri–Eksplosjonsfare.
Ved utskifting benyttes kun batteri som anbefalt av apparatfabrikantetn.
Brukt batteri returneres apparatieverandøren.

For Denmark

ADVARSELI
Lithiumbatteri–Eksplosionsfare ved fejlagtig håndtering.
Udskiftning må kun ske med batteri af samme fabrikat og type.
Lever det brugte batteri tilbage til leverandøren.

For Finland

VAROITUS
Paristo voi räjähtää, jos se ön virheellisesti asennettu.
Vaihda paristo ainoastaan laltevalmistajan suoaittelemaan tyyppiin.
Hävitä käytetty paristo valmistajan ohjeiden mukaisesti.

Thank you for purchasing the DY-90 DIGITAL S CAMCORDER.
(These instructions are for DY-90U)

DIGITAL S

This unit is a DIGITAL S format camcorder. Video cassette tapes which are not marked DIGITAL S cannot be used with this unit.

Precautions for 4 channel audio internal editing

Use a 4 channel audio compatible Digital S editing unit (BR-D92, etc.) when performing audio insertion editing of a 4 channel audio recorded tape.
When performing audio insertion editing with a Digital S editing unit which is not 4 channel audio compatible (BR-D80, BR-D85 and BR-D750), the recorded audio signals on the DA3 and DA4 channels are erased.

MAIN FEATURES

- Compact, lightweight, low-power consumption design.
- High picture quality thanks to the DIGITAL S format.
  The 4:2:2 component digital processing of the format ensures recording and playback with high picture quality.
- High sound quality thanks to the 4-channel PCM audio.
  High-quality digital audio with 16-bit, 48 kHz sampling is provided for 4 channels.
- Concentrated LCD display (with back light)
  The concentrated LCD panel shows the time code and CTL count, tape remaining time, remaining battery power, audio levels, VCR's setup menus, hour meter data and a variety of warning indications. It is back-lighted to facilitate viewing under low light conditions.
- Time code reader/generator
  The built-in time code reader/generator can be used to record SMPTE; U-ver/EBU; E-ver time code and user's bits.
- Time code input/output connectors for slave lock capability
  This unit can be slave-locked to an external time code generator which is connected to the time code input.
  The data in the built-in time code generator is output from the time code output terminal.
- 4-line audio input connectors
  Four lines of audio input are available including camera microphone, interview microphone and line input. Highly reliable balanced XLR connectors are provided for microphone and line input, for ensuring improved signal-to-noise ratio and enhanced sound quality.
- AEF (Automatic Edit Function) enables neat switching between scenes.
- Date/time data recording
  Apart from the SMPTE; U-ver/EBU; E-ver time code area, another time code area is provided for the recording of data on the date and time of the day.
- Built-in loudspeaker for audio checking
  The input audio can be monitored in record or EE mode and the reproduced audio can be monitored in play mode.
  The loudspeaker also outputs an alarm tone in case an abnormal condition occurs with the unit.
- Rec check function for quick recording review
- Scene change cueing function
  Enables searching of the end of the recorded section for the next recording when the recorded tape is loaded.
- LOLUX captures scenes never before possible because of low lighting conditions.
  In this mode the CCD chip is maximized for low light sensitivity. This Super Sensitivity is ideal for special shooting conditions with almost no lighting. Good color balance is maintained even down to 0.75 lx illumination.
- Multi-Zone Auto Iris Detection Circuit
  Multi-zone iris detection circuit ensures optimum iris position even in backlit conditions or when a bright subject moves in a frame. Over-under level switchable.
- Safety Zone indication
  In addition to center mark on/off capability, safety zone indication for the 16:9 screen format is available.
- Zebra pattern video level indication
  Indicated area can be selected with 70 - 80%, 85 - 95%, OVER 95% or OVER 100%.
- Full Auto Shooting (FAS) function
  The FAS function provides a wide range of compatibility with shooting conditions which varies as you move between indoors and outdoors or between bright and dark locations. It is not necessary to change the switch and filter positions every time you move.
- Color temperature conversion filters for "3200 K", "5600 K", "5600 K + 1/16 ND" and "3200 K + Efect (cross)".
- Colour temperature conversion filters for "3200 K", "5600 K", "5600 K + 1/4 ND" and "5600 K + 1/16 ND"
- Variable scan.
  Flicker bars in the display image of computer monitors are caused by the differing scan rate of the computer monitors. The Variable Scan function can minimize this effect by tuning the camera shutter speed to the precise scan rate of the display screen. The small increments range from 60.5 Hz to 1966.7 Hz (U-ver.) from 50.4 Hz to 1953.1 Hz (E-ver.).
- Set up box provided
  Data for the recording condition set with the menu switches on the camera section can be registered on the set up box. The data registered on the set up box can be recalled and loaded on the main unit for a quick setup.

The following symptoms will appear when the tapes recorded on other units (including DY-90) are recorded or played back on this machine.

- The transient section between scenes recorded on other units may appear disturbed.
- Digital noise appears during playback because of tracking errors.

- Not to record important materials contents for two or three minutes in the beginning of tape.
- We cannot assume the liabilities which may derive from the impossibilities of normal recording or playback in case of failure with this unit or the video cassette in use.

CONTENTS

INTRODUCTION

SAFETY PRECAUTIONS 2
MAIN FEATURES 3

1. INTRODUCTION

1-1 System Configuration 6
1-2 Precautions for Proper Use 6
1-3 Routine and Periodical Maintenance 7
1-4 Video Cassette to be Used 8
1-5 Battery Pack to be Used 8
1-6 Condensation 8
1-7 Camera and Lens 9

2. CONTROLS, INDICATORS AND CONNECTORS

2-1 Front Section 10
2-2 Left Side Section (Cassette side) 11
2-3 Right Side Section 12
2-4 Top Section 19
2-5 Rear Section 20
2-6 Counter Display Contents 22
2-7 Lens (optional) 23
2-8 1.5-Inch Viewfinder VF-P116(optional) 24
2-9 Viewfinder Display 25
• Warning Indicators Inside the Viewfinder 25
• Viewfinder Screen Display 25

PREPARATIONS

3. BASIC SYSTEM CONNECTIONS AND ADJUSTMENTS

3-1 Basic System 30
3-2 Attaching the Zoom Lens (optional) 31
3-3 Attaching the Viewfinder (optional) 31
3-4 Attaching the Microphone 32
3-5 Attaching the Tripod Base 32
3-6 Attaching the Optional Microphone 33
3-7 How to Replace Backup Lithium Batteries 34

4. POWER SUPPLY

4-1 AC Operation 35
4-2 Battery Pack Operation 35
• Using JVC's NB-G1U or Flat Shape Type Battery Pack .. 36
• Using an Anton-Bauer Battery Pack 37
• Remaining Battery Power Display/Precautions for the Battery Pack 38

BASIC OPERATIONS

5. PREPARATIONS

5-1 Turning the Power ON 39
5-2 Cassette Loading and Unloading 40

6. SETTING AND ADJUSTMENTS BEFORE SHOOTING

6-1 Camera Control Settings for Adjustment 41
6-2 Viewfinder Adjustment 42
6-3 External Monitor Adjustment 42
6-4 Back Focus Adjustment 43
6-5 White Balance Adjustment 44
• White Balance Adjustment 44
• Full-Time Auto White Balance (FAW) 44
6-6 Switch Settings of the VCR Section 45
6-7 PCM audio recording channels for audio input signals .. 46
6-8 Audio Input Signal Selection 46
6-9 Recording Level Adjustment 47
6-10 Monitoring Audio During Recording 48

7. SHOOTING OPERATION

7-1 Basic Recording Operation 49
7-2 Save Mode 51
7-3 If Unit is Left In Record-Pause (Standby) Mode 51
7-4 Checking Recorded Contents in Record-Pause Mode (Recording Check Function) 52
7-5 Cueing the Scene Change Point 52

8. PLAYBACK MODE

8-1 Playback Procedure 53
8-2 Fast-Forward, Rewind 54
8-3 Search 54

APPLICATION

9. TIME CODE OPERATION

9-1 Displaying Time Code 55
9-2 Presetting and Recording of Time Code 56
• Time Code Presetting Procedure 56
• Presetting User's Bit Data 57
9-3 Recording Time Codes Continuously From Time Codes Recorded on Tape 57
9-4 Recording Time Codes by Slave-Locking the Built-in Time Code Generator with the External TCG 58
9-5 Reproducing Time Codes 59
9-6 Sub-Time Code (Date, Time) 60
• Displaying Sub-Time Code 60
• Setting the Date and Time 61
• Reproducing the Date and Time 61

CONTENTS

10. SETUP MENU

10-1 VCR Setup Menu 62
• VCR Setup Menu Configuration 62
• Displaying and Setting VCR Setup Menus 63
• Setup Menu Contents 64
10-2 Camera Section Setup Menu 65
10-3 Camera Section MAIN MENU Screen 66
10-4 Camera Section ADVANCED MENU Screen 68
• Operation Screen 69
• Process Screen 70
10-5 Resetting Setup Data 71

11. FEATURES OF THE CAMERA SECTION

11-1 Full-Time Auto White Balance (FAW) 73
11-2 IRIS (Brightness) Adjustment 74
• Lens Iris Adjustment 74
• Zebra Pattern Display During Manual Adjustment 74
11-3 Shooting the Screen Image on the Computer Monitor ... 75
11-4 Gain (Sensitivity) Adjustment 76
• Gain Switching 76
• Gain Boost Under Lolux Condition 76
11-5 Switch Setup According to Illumination and Object 77
• Switch Functions 77
• Full Auto Shooting (FAS) Function 77
11-6 Set Up Box Operation 78

OTHERS

12. OTHERS

12-1 Connection with a Switcher 80
12-2 Trouble Shooting 81
• Alarm Indications 81
• Warning message on viewfinder 83
• Troubles with Error Code Outputs 84
• Troubles without Error Code Outputs 86
12-3 Hour Meter Display 87
12-4 Index 88
12-5 Specifications 90
• Optional Accessories 91
• External Dimensions 91

1. INTRODUCTION

1-1 System Configuration

The standard configuration of the DY-90 is as shown below.

STANDARD CONFIGURATION

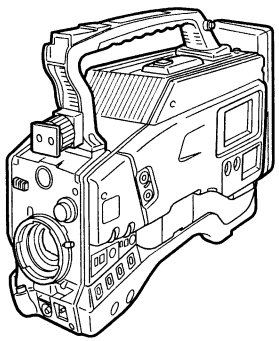

Camcorder (DY-90)

Lithium battery

Since it has broad directivity, this microphone may pick up surrounding noise such as that of the lens operation, etc. In this case, use an MV-P616 or MV-P612 microphone for the 6 pin microphone connector.

Microphone (Monaural)

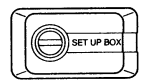

Set up Box

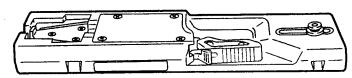

Tripod base

1-2 Precautions for Proper Use

- Supply voltage
  Make sure that the power is between 11 V and 15 V DC. If the power voltage is too low, abnormal color and increased noise may occur. Do not exceed 15 V DC in any case, or the unit could be damaged.
- Where there are strong electromagnetic waves or magnetism, for example near a radio or TV transmitter, transformer, motor, etc., the picture may contain noise and the colors may be incorrect.
- When a wireless microphone or wireless microphone tuner is used near the camera, the tuner could pick up noise. In such a case, select another channel.
- Avoid using or placing the unit in places;
  - subject to extreme heat or cold;
  - with excessive dirt or dust;
  - with high humidity or moisture;
  - subject to smoke or vapor such as near a cooking stove;
  - subject to strong vibrations or on an unstable surface.
  - also do not leave the unit for long hours in a parked car under direct sunlight or near room heating equipment.
- Protect the unit from being splashed with water (especially when shooting in the rain).
- Protect the unit against penetration of dust when using it in a place subject to sandy dust.
- Use the unit in an upright position. If placed on its side, heat release efficiency will deteriorate, adversely affecting the tape transport.
- Do not drop or hit it against a hard object.
  (Special care is required to avoid shocks during transportation.)
- Remove the video cassette before transporting the unit.
- Do not insert an object other than a video cassette in the cassette insertion slot. Be sure to close the cassette cover when the unit is not to be used for a long period
- To avoid condensation inside the unit, do not transport it between places with a large difference in temperature.
- Do not set the POWER switch to OFF or remove the power cable during recording or playback. Otherwise the tape may be damaged.
- When the unit is not in use, be sure to set the POWER switch to OFF in order to save power consumption.
- Cleaning the body: Wipe body with a dry, soft cloth (such as cheesecloth). When it is extremely dirty, soak the cloth in a solution of neutral detergent, wring it out and then wipe.
  To prevent deformation of the body, etc. and to avoid operation hazards, do not allow volatile liquids such as benzine and thinner to touch the body, and do not wipe it with a cloth soaked in such a liquid.
  If the equipment is soiled with water, oil, solvent, etc., wipe over with soft cloth or cotton first, then clean with gauze, etc. soaked in denatured alcohol.
- The camera may be unstable in the period immediately after the power is turned on, but this is not a malfunction.
- Do not playback an PAL for U-ver, NTSC for E-ver recorded tape, as this may cause noise to the audio and video signals even when the unit enters the stop mode. If this happens, remove the cassette tape so that the unit returns to its normal state.
- Setup level (U-ver. only)
  The MONITOR OUTPUT connector of this unit outputs the video signal with setup at the factory. When the video signal without setup is requested , consult your nearest JVC authorized agent.
  Only the video signal without setup is recorded on the tape.

See page 1-9 "1.8.1 Dip switch S1 on the CP board have the functions as described below".

1-3 Routine and Periodical Maintenance

This unit incorporates precision mechanical parts, which will collect dirt, wear out and deteriorate as the unit is used. On the other hand, when the unit has been used for a long period, the heads, drums and tape transport mechanisms also collect dirt deposited on them. Also, dust which penetrates the inside of the VCR section especially during outdoor use will promote the wear and deterioration of mechanical parts by causing poor contact between tape and heads or failing to maintain the video and audio quality at high levels. To prevent wear and deterioration, clean the mechanical parts using a head cleaning tape as routine maintenance. But cleaning with a head cleaning tape alone is not enough for cleaning the entire tape transport mechanism. it is also recommended to apply periodical maintenance (inspection) to prevent troubles which may be caused by the sudden occurrence of failure.
As the replacement, adjustment and servicing of parts require advanced skill and equipment, please consult the person in charge of professional video equipment at your nearest JVC-authorized service agent.

Head Cleaning

- To maintain high video and audio quality, clean the heads by using the special head cleaning tape about every 20 hours.
  If head cleaning is not performed periodically, a type of mosaic noise called block noise may appear in the picture or sound may be interrupted.

Block Noise

- Use the optional DCL-5 as the head cleaning tape.
- Do not use head cleaning tapes other than specified. Read the instructions of the head cleaning tape for its operating procedure and precautions.
- When dust is deposited on the video head of the VCR section, the RF indicator lights up on the display during the back-space operation in record-pause mode. At this time, the warning message "VTR WARNING (HEAD)" is displayed on the viewfinder. During recording, this indicator does not light up and the warning message on the viewfinder is not displayed.

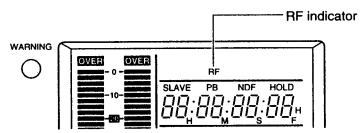

Periodical Maintenance

Contents : Check or replace the following mechanical parts according to the running time.

Running Time	500H	1000 H	1500H	2000H
Drum ass'y (including heads)	●	●	●	●
Head cleaner	●	●	●	●
Tape guides & rollers	○	○	○	●
Fixed heads	○	○	☆	●
Belts & pinch rollers	○	●	○	●
Drive parts	○	○	☆	●

- The drum assembly (including heads) and the head cleaner should be replaced every 500 hours.
  ○: Clean, check and adjust.
  ☆: Clean and check. Replace as required.
  ●: Replace.
- The maintenance contents may be variable depending on the operating environment and method. Therefore, the above data should be considered as a reference.

Time management

The running time of the VCR section can be confirmed with the hour meter display (which shows the drum running time). For details, see "HOUR METER DISPLAY" on page 87.

For consultations related to the maintenance programming or cost, please contact the person in charge of professional video equipment at your nearest JVC-authorized service agent.

See page 2-4 "MAINTENANCE AND INSPECTION OF MAIN PARTS".

1-4 Video Cassette to be Used

- Only cassette bearing the " S-VHS " logo can be used with this unit.
- Video cassettes marked with S-VHS or VHS cannot be used with this unit. If you insert an S-VHS or a VHS cassette in the VCR, it will be ejected automatically.
- Video cassettes cannot be used upside down.
- Avoid storing a video cassette with unevenly wound tape, as this may damage the tape. Rewind it to the beginning before placing a cassette into storage.
- After a video cassette tape has been used repeatedly, it becomes unable to maintain full performance due to an increase in noise caused by dropouts, etc. Do not continue to use a dirty or damaged tape, as this will reduce the rotary head life.
- The video cassette tape marked S-VHS is provided with a REC switch for use in preventing accidental erasure.
  - Slide the REC switch to OFF to protect the required recording in the tape from being overwritten.
  - To record on the tape, slide the REC switch to ON.

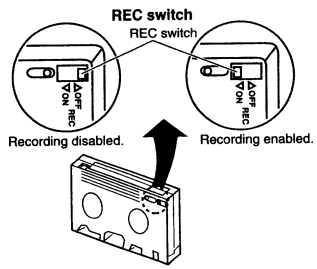

1-5 Battery Pack to be Used

This unit can use any of the following battery packs.

- JVC battery pack : NB-G1U
- Flat Shape Type bettery pack
- Anton-Bauer battery pack : Trimpack 13/14 Series, Magnum 13/14 Series, Compack 13/14 Series. Propack 13/14 Series.

To display the remaining battery power accurately, set "BATT. TYPE SELECT" in setup menu Group 4 according to the type of the battery pack in use. (See page 64)

- An Anton-Bauer battery pack cannot be attached to this unit directly.

An additional battery holder is required.

- Battery holder: Anton-Bauer model QRQ27.

See page 37 for battery holder attaching method.

1-6 Condensation

- When the unit which has been cooled down completely in a cold place is carried to a warm place, the moisture contained in the warm air may attach to the head drum or tape guides and be cooled into water droplets. This phenomenon is referred to as condensation (dewing). When this occurs in a DY-90, the head drum and tape guides are covered with droplets allowing the tape to be stuck to them, leading to tape damage.
- Condensation occurs in the following cases:
  - When the unit is suddenly moved from a cold place to a warm place.
  - When the room heater has just started or when the unit is exposed directly to cold air from the air conditioner.
  - When the unit is placed in a very humid place.

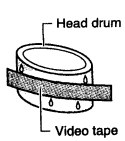

- When condensation occurs with this unit, the DEW on the display lights up, the error code "Err 02:1" appears on the counter display (see page 85).

A warning message "VTR WARNING (DEW)" is displayed on the viewfinder screen.

To assist this, leave the unit with the power ON and wait until the error code "Err 02:1" and the DEW indicator disappear from the display.

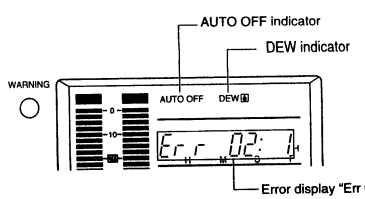

1-7 Camera and Lens

CAMERA

CCD Smear and Blooming

- Due to the physical structure of the CCD in this unit it is possible to induce vertical streaking or smear when shooting an extremely bright light source.
- Another effect is the expansion of light around a bright light or object called Blooming.

Just as you protect your image against lens flare (internal lens reflections): please be careful when shooting a bright light source.

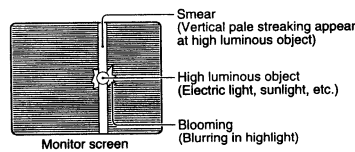

Gain, Noise

- Higher levels of output gain result in a decrease in the signal to noise ratio, possibly resulting in a noisy picture.

Moire or Aliasing

- Shooting stripes or fine patterns may cause a jagged effect or a banding in fine mesh patterns.

Try repositioning the lens zoom to change the frequency of the detail information and eliminate the distortions.

High Temperatures

- High temperatures can cause CCD sensor pixels to malfunction with the effect of white dots in the image. This condition could damage the CCD, and certainly raises the "fixed pattern" noise level which CCDs have, thus giving a noisy picture.

LENS

- The camera lens should be protected externally with a Clear or UV filter against accidental scratching, touching or dirt. The external lens cap should be used whenever possible.
- When the lens is changed, take special care to avoid contaminating the inner lens surface and camera gate/optical block area with moisture or dust.
- Do not expose the lens or viewfinder to strong sunlight or place in a strong light source.
  - Exposure of the lens or viewfinder to strong sunlight or other strong light sources will cause eye injuries.
  - Continued exposure of the lens or viewfinder to sunlight will damage the internal condensing lens, resulting in malfunction and possible fire.

2. CONTROLS, INDICATORS AND CONNECTORS

2-1 Front Section (U ver.)

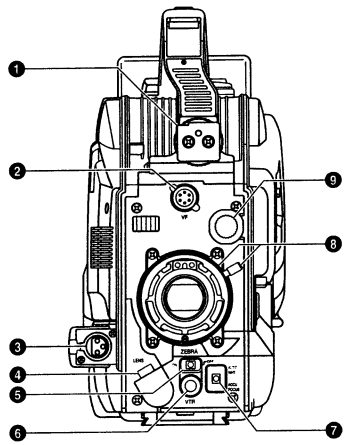

❶ Viewfinder mount base, sliding securing ring
Mount the VF-P116 or VF P115 viewfinder (optional) on the base and secure it using the sliding securing ring.
See "Attaching the Viewfinder" on page 31.

❷ [VF] Viewfinder connector
Connect to the cable from viewfinder.

❸ [DA2 IN (MIC IN + 48 V)] DA2 (Microphone) input connector
This balanced XLR three connector is for microphone level only.
A 48 V DC is supplied as the power supply for the microphone (Use only phantom microphone). Connect the JVC MV-P615 or other microphone.
The audio signal from this connector is recorded on DA2 of the PCM audio channel. It is also recorded on the linear track of the tape for audio search.
When using a microphone other than a Phantom microphone, consult a JVC authorized service agent.

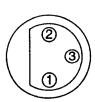

Pin No.	Function
1	GND
2	HOT
3	COLD

See "Attaching the Optional Microphone" on page 33.

❹ [LENS] Lens control connector
Connect 12-pin lens control cable from lens.
Lens connector function

Pin No.	Function	Pin No.	Function
1	RET switch	7	IRIS position
2	VCR trigger	8	IRIS A/R INPUT
3	GND	9	EXTENDER position
4	Lens AUTO/MANU control	10	ZOOM position
5	IRIS control	11	—
6	+12V DC	12	—

❺ [ZEBRA] Switch
When this switch is ON, a zebra pattern is displayed with a brightness corresponding to 70% to 80% video levels on the viewfinder screen. This pattern can be used as a reference for manual adjustment of the lens iris.
When adjusting the iris manually, adjust it so that the zebra patterns are displayed in the section which you want to stress in the object.
- The default value is 70% - 80%. The luminance level can be changed with the ZEBRA setting in the Advanced Menu screen.
See "ZEBRA item" on page 70.

❻ [VTR] VTR trigger button (record start/stop button)
With the VCR set in record pause mode, record start/stop can be effected with this button.
(It is interlocked with the lens and the VTR trigger button on the side panel.)

❼ [AUTO WHT./ACCU FOCUS] switch
AUTO WHITE :
First position a white object to occupy 80% of the center of the image.
Setting this switch to the upper position ("AUTO WHT.") will provide automatic adjustment for white balance.
It is not activated in preset, full auto shooting, full-time auto white blance and color bar modes.
See "White Balance Adjustment" on page 44.
ACCU-FOCUS :
When this switch is set to "ACCU FOCUS" in the lower position, the lens iris will be forced to open for approximately ten seconds.
The object depth can be reduced and the lens focusing can be adjusted more accurately.

> **CAUTION :**
> As the automatic shutter is activated here, flicker may appear on the screen depending on the lighting conditions (such as a fluorescent lamp, etc.)
> Operation is not possible in the LoLux mode.

❽ Lens mounting ring/Lens lock lever
Hold the lens and use the knob to twist the ring anticlockwise to release lens.
To mount lens make sure the lens guide pin fits well, and then twist the ring clockwise until firm.
See "Attaching the Zoom Lens (Optional)" on page 31

❾ [FILTER] Color temperature conversion filter control knob
This knob changes the internal filter of color temperature.
See "Filter" on page 41.

→ See page 3-6 "3.2.8 Service menu".

2. CONTROLS, INDICATORS AND CONNECTORS

2-1 Front Section (E-ver.)

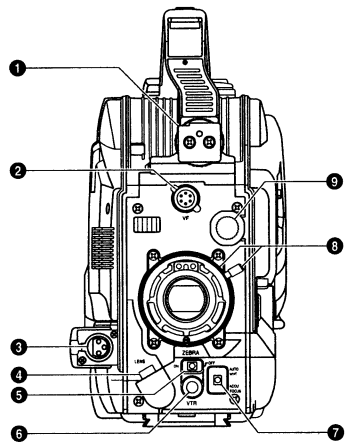

❶ Viewfinder mount base, sliding securing ring
Mount the VF-P116 or VF P115 viewfinder (optional) on the base and secure it using the sliding securing ring.
See "Attaching the Viewfinder" on page 31.

❷ [VF] Viewfinder connector
Connect to the cable from viewfinder.

❸ [MIC 2 IN + 48 V] Microphone 2 input connector
This balanced XLR three connector is for microphone level only.
A 48 V DC is supplied as the power supply for the microphone (Use only phantom microphone). Connect the JVC MV-P615 or other microphone.
When using a microphone with this connector, refer to ❺ [MIC1/MIC2] SELECT switch on page 15 and set the switch to MIC2.

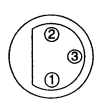

Pin No.	Function
1	GND
2	HOT
3	COLD

See "Attaching the Optional Microphone" on page 33.

❹ [LENS] Lens control connector
Connect 12-pin lens control cable from lens.
Lens connector function

Pin No.	Function	Pin No.	Function
1	RET switch	7	IRIS position
2	VCR trigger	8	IRIS A/R INPUT
3	GND	9	EXTENDER position
4	Lens AUTO/MANU control	10	ZOOM position
5	IRIS control	11	—
6	+12V DC	12	—

❺ [ZEBRA] Switch
When this switch is ON, a zebra pattern is displayed with a brightness corresponding to 70% to 80% video levels on the viewfinder screen. This pattern can be used as a reference for manual adjustment of the lens iris.
When adjusting the iris manually, adjust it so that the zebra patterns are displayed in the section which you want to stress in the object.
- The default value is 70% - 80%. The luminance level can be changed with the ZEBRA setting in the Advanced Menu screen.
See "ZEBRA item" on page 70.

❻ [VTR] VTR trigger button (record start/stop button)
With the VCR set in record pause mode, record start/stop can be effected with this button.
(It is interlocked with the lens and the VTR trigger button on the side panel.)

❼ [AUTO WHT./ACCU FOCUS] switch
AUTO WHITE :
First position a white object to occupy 80% of the center of the image.
Setting this switch to the upper position ("AUTO WHT.") will provide automatic adjustment for white balance.
It is not activated in preset, full auto shooting, full-time auto white blance and colour bar modes.
See "White Balance Adjustment" on page 43.
ACCU-FOCUS :
When this switch is set to "ACCU FOCUS" in the lower position, the lens iris will be forced to open for approximately ten seconds.
The object depth can be reduced and the lens focusing can be adjusted more accurately.

> **CAUTION :**
> As the automatic shutter is activated here, flicker may appear on the screen depending on the lighting conditions (such as a fluorescent lamp, etc.)
> Operation is not possible in the LoLux mode.

❽ Lens mounting ring/Lens lock lever
Hold the lens and use the knob to twist the ring anticlockwise to release lens.
To mount lens make sure the lens guide pin fits well, and then twist the ring clockwise until firm.
See "Attaching the Zoom Lens (Optional)" on page 31

❾ [FILTER] Colour temperature conversion filter control knob
This knob changes the internal filter of colour temperature.
See "Filter" on page 40.

2-2 Left Side Section (Cassette Side) (U-ver.)

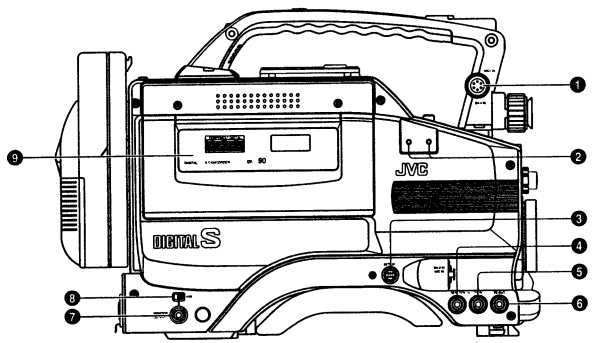

❶ [DA4 IN (MIC 1 IN)] DA4 (Microphone 1) input connector (6-pin)

Connect the provided microphone.
With the mic holder (optional), the following microphone models can be used.
- MV-P616 (mono)
- MV-P612 (stereo/mono)
- The audio signal from this connector is recorded on DA4 of the PCM audio channel.
  * It is not recorded on the linear track of the tape for audio search.
  * When using a stereo microphone, the audio signal is only recorded on the L channel.

Pin No.	Function	Pin No.	Function
A	—	D	L (Hot)
B	9 V DC	E	L (GND)
C	GND	F	—

❷ Mic holder mounting screw holes

The mic holder KA-A90 (Optional) can be mounted here.

❸ [SET UP] connector

Connect the provided set up box to this connector.
The camera's menu data set with the ❷ FILE switch A, B or OFF on page 14 can be read out onto the set up box.
Also the camera's menu data stored in the set up box can be recalled and written onto the FILE switch A, B or OFF.
- For readout from and writing on the set up box, see page 78.

❹ [GEN LOCK IN] connector (BNC)

External reference composite video or black burst video input.
This unit cannot be genlocked with the VCR playback signal.
See "Connection with a switcher" on page 80.

Note :

When the power is switched ON while external sync signal is input, the screen moves in a vertical direction for a few seconds. This is not a malfunction.

❺ [TC IN] connector (BNC)

Input connector for the SMPTE-standard LTC signal. The built-in time code generator can be slave-locked with the input time codes.
For the slave lock of time code, see page 58.

❻ [TC OUT] connector (BNC)

Output connector for the LTC signal from the built-in time code generator.
The time code recorded on the tape is not output in play mode.

❼ [MONITOR OUTPUT] connector (BNC)

- Composite video signal output connector.
  Outputs the video signal selected by the ❽ [CAM/VTR] switch.
- The signal with setup will be output.
- * Setup menu items for camera section, VCR section, time code or date/time data are not output.

❽ [CAM/VTR] Monitor output CAM/VTR switch

This selects the video signal to output to the MONITOR OUTPUT connector or viewfinder.
CAM : Regardless of which mode, the EE image from the camera video signal is output.
VTR : Playback image is output during the playback mode. An EE image is output during other modes than the Play Mode.
* The backspace function during the Record-Pause Mode and the recording check function are also carried out on the playback mode.

Regardless of the switch setting, playback sound is output during the playback mode and EE sound is output during other modes.

❾ Cassette cover

When the DY-90 is in POWER ON mode, pressing the EJECT button on the top of the VCR section opens this cover so that a cassette tape can be inserted or removed from the unit. The cover can be locked automatically by pushing and closing it.

To prevent penetration of foreign objects in the unit, do not leave the unit with the cassette cover open.

2-2 Left Side Section (Cassette Side) (E-ver.)

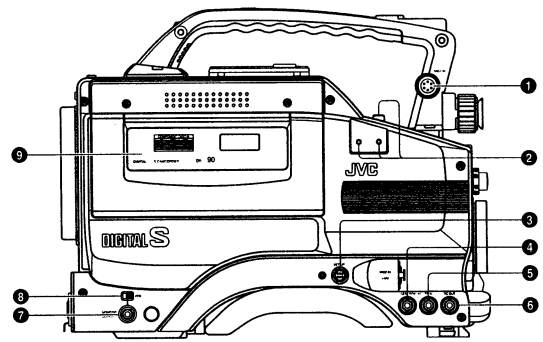

❶ [MIC 1 IN] Microphone 1 input connector (6-pin)

Connect the provided microphone.
With the mic holder (optional), the following microphone models can be used.
- MV-P616 (mono)
- MV-P612 (stereo)
- When using a microphone with this connector, refer to ❺[MIC1/MIC2] SELECT switch and set the switch to MIC1. See page 15.
- Set the [FRONT MIC1 SELECT] on the SETUP MENU according to the microphone type (monaural or stereo) to be connected. See page 64.

Pin No.	Function	Pin No.	Function
A	R (Hot)	D	L (Hot)
B	9 V DC	E	L (GND)
C	GND	F	R (GND)

To find out to which channel of the tape the audio signal from MIC1 or MIC2 connectors is recorded, see page 64.

❷ Mic holder mounting screw holes

The mic holder KA-A90 (Optional) can be mounted here.

❸ [SET UP] connector

Connect the provided set up box to this connector.
The camera's menu data set with the ❷ FILE switch A or B on page 14 can be read out onto the set up box.
Also the camera's menu data stored in the set up box can be recalled and written onto the FILE switch A or B.
- For readout from and writing on the set up box, see page 78.

❹ [GEN LOCK IN] connector (BNC)

External reference composite video or black burst video input.
This unit cannot be genlocked with the VCR playback signal.
See "Connection with a switcher" on page 80.

Note :

When the power is switched ON while external sync signal is input, the screen moves in a vertical direction for a few seconds. This is not a malfunction.

❺ [TC IN] connector (BNC)

Input connector for the EBU-standard LTC signal. The built-in time code generator can be slave-locked with the input time codes.
For the slave lock of time code, see page 58.

❻ [TC OUT] connector (BNC)

Output connector for the LTC signal from the built-in time code generator.
The time code recorded on the tape is not output in play mode.

❼ [MONITOR OUTPUT] connector (BNC)

- Composite video signal output connector.
  Outputs the video signal selected by the ❽ [CAM/VTR] switch.
- * Setup menu items for camera section, VCR section, time code or date/time data are not output.

Note :

Make sure that the monitor is terminated with 75 Ω before connecting the MONITOR OUTPUT connector. If it is not terminated with 75 Ω the video signal will not output when the power is on because of the power saving features equipped with this unit.

❽ [CAM/VTR] Monitor output CAM/VTR switch

This selects the video signal to output to the MONITOR OUTPUT connector or viewfinder.
CAM : Regardless of which mode, the EE image from the camera video signal is output.
VTR : Playback image is output during the playback mode. An EE image is output during other modes than the Play Mode.
* The backspace function during the Record-Pause Mode and the recording check function are also carried out on the playback mode.

Regardless of the switch setting, playback sound is output during the playback mode and EE sound is output during other modes.

❾ Cassette cover

When the DY-90 is in POWER ON mode, pressing the EJECT button on the top of the VCR section opens this cover so that a cassette tape can be inserted or removed from the unit. The cover can be locked automatically by pushing and closing it.

To prevent penetration of foreign objects in the unit, do not leave the unit with the cassette cover open.

2-3 Right Side Section (U-ver.)

[Camera Setting Section]

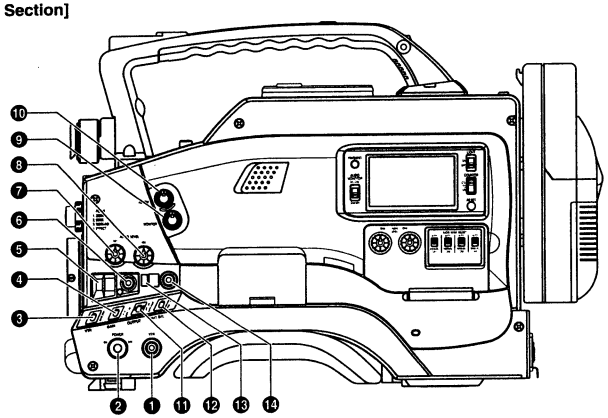

❶ [VTR] VTR trigger button (Recording Start/Stop)
With the VCR set in record pause mode, record start/stop can be effected with this button.
(It is interlocked with the lens and the VTR trigger button on the front sections.)

❷ [POWER] switch
Turn the power ON and OFF with this switch.
- With this switch set to ON, the DY-90 status differs depending on the setting of the ❸ VTR (SAVE/STBY) switch.

❸ [VTR] switch
Select the DY-90 status when the power is turned ON with this switch.
SAVE : Drum rotation stops and the DY-90 enters the tape protection mode. When a recordable cassette tape is loaded, pressing the [VTR] button enters the record mode. However in this case, recording will start after a short interval.
STBY : When a recordable cassette tape is loaded, the DY-90 enters the record-pause mode and the drum continues to rotate. In this mode, when the [VTR] button is pressed, the DY-90 immediately enters the record mode.
- The mode selected by this switch is displayed on the status screen in the viewfinder.

❹ [GAIN] switch
Electronically boosts the light sensitivity when there is insufficient illumination on the subject. The boosting level differs depending on the switch position as follows:
H : 18 dB (boosted to approximately 8 times the original)
M : 9 dB (boosted to approximately 3 times the original)
L : 0 dB (no boosting is applied)
- The boosting level for each switch position can be changed with the advanced menu screen. (See page 69.)
The more the boosting level is increased, the more the resulting image will be noisy.

❺ [AUTO IRIS] Auto iris level switch
This switch selects the automatic iris adjustment reference value according to the condition in which the camera is used.
BACK. L : Under back light (Open the iris about 1 step from the standard level.)
NORMAL : Normal condition
SPOT. L : Under spotlight (Close the iris about 1 step from the standard level.)
See page 77.

❻ [FULL AUTO] Full auto shooting ON/OFF button and indicator
- This momentary switch turns this function on and off, with a indicator light.
- Full auto shooting combines the auto iris, auto level control and full auto white (FAW) to automatically adjust the video signal level and the white balance to their optimum levels.
- The iris is placed in automatic even if the iris mode switch of the lens is in manual.
- The gain will vary continuously to the maximum of +18 dB. The shutter speed will vary continuously to the minimum of 1/200 of a second.
See [Full Auto Shooting (FAS) function] on page 77.

2-3 Right Side Section (Cont'd) (U-ver.)

❼ [DA1 AUDIO LEVEL] Control
Adjusts the audio recording level of the [DA1 IN] connector on the rear panel.
This adjustment is available only when the ❺ [DA1 AUDIO MODE SELECT] switch on page 15 is set to MANUAL.

❽ [DA2 AUDIO LEVEL] Control
Adjusts the audio recording level of the ❻ [DA2 IN (MIC IN)] connector on the front panel.
This adjustment is available only when the [DA2 AUDIO MODE SELECT] switch on page 15 is set to MANUAL.

❾ [MONITOR] Audio monitor control
Adjusts the volume of the monitoring loudspeaker and earphone. The audio is muted when this control is set to the minimum position.

❿ [ALARM] control
Turn to control the volume of the alarm tone which is output from the monitoring loudspeaker or earphone in case of a warning or other abnormal condition occurring with the DY-90.
Turn this control anticlockwise to reduce the volume.
Setting this control to the minimum position mutes the alarm tone.

⓫ [OUTPUT] Color bar/Camera/Auto knee switch
This switch is used to select the output signal. When the video signal from the shooting camera is selected, the auto knee function is available.
BARS : Outputs the color bar signal. In this mode, the auto knee function is not available. Set to this position when adjusting the video monitor or when recording the color bar signal.
CAM. AUTO KNEE OFF :
Outputs the video signal from the shooting camera. In this mode, the auto knee function is not available.
CAM. AUTO KNEE ON :
Outputs the video signal from the shooting camera. In this mode, the auto knee function is available.
AUTO KNEE function
When shooting a foreground object with a high-brightness background, if the brightness level is set for a foreground human being, etc., the background image will be blurred with white. In such a case, when the auto knee function is used, a clearer background is obtained.
It is effective especially in the following cases:
- When shooting a human being in the shade on a fine day
- When shooting a high-contrast scene

Note :
If a fast moving high-brightness section like a car in sunlight is shot, the auto knee function may change the brightness of the entire image along with the motion of the object. In this case, set the auto knee function to OFF.

⓬ [WHT.BAL] White balance switch
There are three white balance modes possible with this switch.
A : If white balance is performed with the switch in this position it will be memorised into A.
B : If white balance is performed with the switch in this position it will be memorised into B.
PRST (PRESET) : A non-erasable white balance setting to 3200K. An emergency setting for outdoors with a 5600K or 5600K+ND filter turret setting.
- FAW (Full-time Auto White) mode can be set to A, B or PRESET with the ADVANCED MENU (see page 69).
In the FAW mode, video color temperatures are constantly sampled for automatic adjustment to a proper white balance.

⓭ [BLACK] Black stretch/black compression switch
Switches the gain for the dark section of the image.
Set to an appropriate position depending on the video signal to be shot.
BLACK STRETCH :
By stretching the signal only for the dark section, contrast in the dark portion of the image is enhanced.
NORMAL :
Standard mode.
BLACK COMPRESS :
When an entire image is relatively light and the contrast is low, the gain of the dark section is compressed to increase the contrast.

⓮ [LOLUX] LOLUX on/off button
This button toggles the LOLUX mode on and off.
- LOLUX gain gives extremely low light level sensitivity for special applications. This will result in an increase of 33 dB in the LOLUX mode.
- LOLUX operation takes priority over normal gain operation. If the unit is placed in the LOLUX mode when it is in full auto shooting mode, the auto level control (ALC) (one of the full auto shooting functions) will be made inactive, so that the LOLUX mode is given preference (FAW still remains active).

2-3 Right Side Section (E-ver.)

[Camera Setting Section]

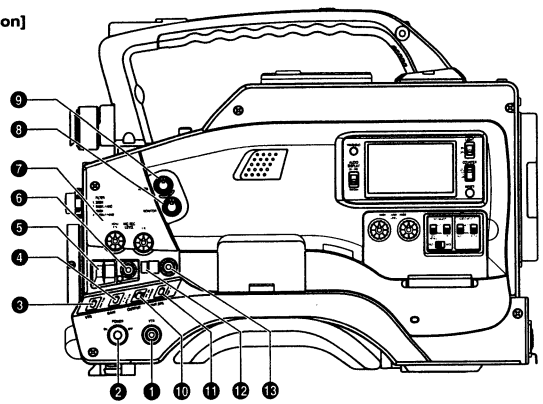

❶ [VTR] VTR trigger button (Recording Start/Stop)
With the VCR set in record pause mode, record start/stop can be effected with this button.
(It is interlocked with the lens and the VTR trigger button on the front sections.)

❷ [POWER] switch
Turn the power ON and OFF with this switch.
- With this switch set to ON, the DY-90 status differs depending on the setting of the ❸ VTR (SAVE/STBY) switch.

❸ [VTR] switch
Select the DY-90 status when the power is turned ON with this switch.
SAVE : Drum rotation stops and the DY-90 enters the tape protection mode. When a recordable cassette tape is loaded, pressing the [VTR] button enters the record mode. However in this case, recording will start after a short interval.
STBY : When a recordable cassette tape is loaded, the DY-90 enters the record-pause mode and the drum continues to rotate. In this mode, when the [VTR] button is pressed, the DY-90 immediately enters the record mode.
- The mode selected by this switch is displayed on the status screen in the viewfinder.

❹ [GAIN] switch
Electronically boosts the light sensitivity when there is insufficient illumination on the subject. The boosting level differs depending on the switch position as follows:
H : 18 dB (boosted to approximately 8 times the original)
M : 9 dB (boosted to approximately 3 times the original)
L : 0 dB (no boosting is applied)
- The boosting level for each switch position can be changed with the advanced menu screen. (See page 69.)
The more the boosting level is increased, the more the resulting image will be noisy.

❺ [AUTO IRIS] Auto iris level switch
This switch selects the automatic iris adjustment reference value according to the condition in which the camera is used.
BACK. L : Under back light (Open the iris about 1 step from the standard level.)
NORMAL : Normal condition
SPOT. L : Under spotlight (Close the iris about 1 step from the standard level.)
See page 77.

❻ [FULL AUTO] Full auto shooting ON/OFF button and indicator
- This momentary switch turns this function on and off, with a indicator light.
- Full auto shooting combines the auto iris, auto level control and full auto white (FAW) to automatically adjust the video signal level and the white balance to their optimum levels.
- The iris is placed in automatic even if the iris mode switch of the lens is in manual.
- The gain will vary continuously to the maximum of +18 dB. The shutter speed will vary continuously to the minimum of 1/200 of a second.
See [Full Auto Shooting (FAS) function] on page 77.

2-3 Right Side Section (Cont'd) (E-ver.)

❼ [MIC REC LEVEL] control
Adjust the recording level of the camera's microphone (MIC1 and MIC2) with this control.
This control is valid only when the [MIC SELECT] switch is set to "MANUAL".
- (Mono) 2/1L control
Adjusts the recording level of the microphones:
  - Microphone of MIC 2 connector.
  - Monaural microphone of MIC 1 connector
  - Stereo microphone L channel of MIC 1 connector.
- 1R control
Adjusts the recording level of stereo microphone R channel of MIC1.

❽ [MONITOR] Audio monitor control
Adjusts the volume of the monitoring loudspeaker and earphone. The audio is muted when this control is set to the minimum position.

❾ [ALARM] control
Turn to control the volume of the alarm tone which is output from the monitoring loudspeaker or earphone in case of a warning or other abnormal condition occurring with the DY-90. Turn this control anticlockwise to reduce the volume.
Setting this control to the minimum position mutes the alarm tone.

❿ [OUTPUT] Colour bar/Camera/Auto knee switch
This switch is used to select the output signal. When the video signal from the shooting camera is selected, the auto knee function is available.
BARS : Outputs the colour bar signal. In this mode, the auto knee function is not available. Set to this position when adjusting the video monitor or when recording the colour bar signal.
CAM. AUTO KNEE OFF :
Outputs the video signal from the shooting camera. In this mode, the auto knee function is not available.
CAM. AUTO KNEE ON :
Outputs the video signal from the shooting camera. In this mode, the auto knee function is available.
AUTO KNEE function
When shooting a foreground object with a high-brightness background, if the brightness level is set for a foreground human being, etc., the background image will be blurred with white. In such a case, when the auto knee function is used, a clearer background is obtained.
It is effective especially in the following cases:
- When shooting a human being in the shade on a fine day
- When shooting a high-contrast scene

Note :
If a fast moving high-brightness section like a car in sunlight is shot, the auto knee function may change the brightness of the entire image along with the motion of the object. In this case, set the auto knee function to OFF.

⓫ [WHT.BAL] White balance switch
There are three white balance modes possible with this switch.
A : If white balance is performed with the switch in this position it will be memorised into A.
B : If white balance is performed with the switch in this position it will be memorised into B.
PRST (PRESET) : A non-erasable white balance setting to 3200K. An emergency setting for outdoors with a 5600K or 5600K+ND filter turret setting.
- FAW (Full-time Auto White) mode can be set to A, B or PRESET with the ADVANCED MENU (see page 69).
In the FAW mode, video colour temperatures are constantly sampled for automatic adjustment to a proper white balance.

⓬ [BLACK] Black stretch/black compression switch
Switches the gain for the dark section of the image.
Set to an appropriate position depending on the video signal to be shot.
BLACK STRETCH :
By stretching the signal only for the dark section, contrast in the dark portion of the image is enhanced.
NORMAL :
Standard mode.
BLACK COMPRESS :
When an entire image is relatively light and the contrast is low, the gain of the dark section is compressed to increase the contrast.

⓭ [LOLUX] LOLUX on/off button
This button toggles the LOLUX mode on and off.
- LOLUX gain gives extremely low light level sensitivity for special applications. This will result in an increase of 33 dB in the LOLUX mode.
- LOLUX operation takes priority over normal gain operation. If the unit is placed in the LOLUX mode when it is in full auto shooting mode, the auto level control (ALC) (one of the full auto shooting functions) will be made inactive, so that the LOLUX mode is given preference (FAW still remains active).

2-3 Right Side Section (Cont'd)

[Setup/Mode Setting Section]

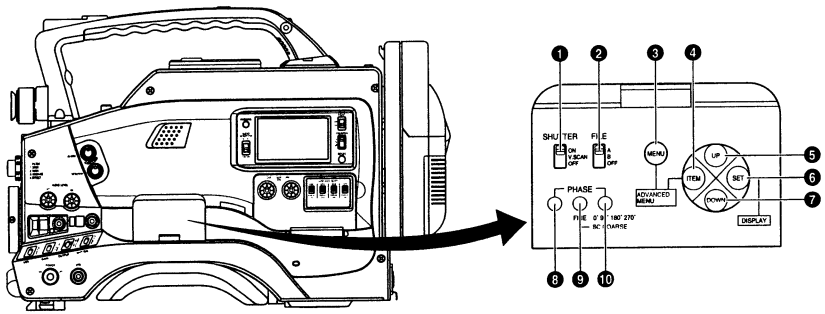

❶ [SHUTTER] Shutter switch

ON : This mode allows setting of different shutter speeds.
To change shutter speed push the UP ❺ or DOWN ❼ buttons.

V.SCAN : This mode helps adjust the shutter speed to match the scan rate of computer monitor.
Place the switch down in the V.SCAN position and then use the UP or DOWN buttons to adjust the speed.

OFF : This mode corresponds to the standard 1/60.

- The shutter speed is displayed in the viewfinder. (See page 29.)

■ WHEN TO USE

A shutter speed of 1/50th second is too slow to prevent blurring from normal actions when a subject is moving.
This gives a smooth and natural effect when watching motion normally, but in certain applications the video is to be displayed in slow motion or as a freeze. The blurring in this case reduces the possible sharpness of the image.
As one increases the shutter speed the amount of light collected is less and less, so consideration should be given to the effects of openning the iris and increasing gain.
Opening the iris reduces depth of field and causes foreground and background objects to go out of focus. This is a useful artistic technique.

❷ [FILE] File switch

This switch registers the set values at the MENU screen for camera section and reads the registered FILE.

A : Register to the FILE A. (in registration)
Shooting can be carried out with the set values registered to the FILE A. (in reading)

B : Register to the FILE B. (in registration)
Shooting can be carried out with the set values registered to the FILE B. (in reading)

OFF : Register to the FILE OFF. (in registration)
Shooting can be carried out with the set values registered to the FILE OFF. (in reading)

The items in the ADVANCED MENU require the registration operation. (Switch position: During A or B)
See page 68.

❸ [MENU] button

❹ [ITEM] button

❺ [UP] button

❻ [SET/DISPLAY] button

When this button is pressed in the normal mode screen, the viewfinder display mode is changed. Each time this button is pressed, the viewfinder display is changed in the order Status 0, Status 1, Status 2 and then returned to Status 0.
For details on "Status Screen", see page 25.

❼ [DOWN] button

> The above buttons ❸ to ❼ are used when setting the Setup Menu items for the camera section.
> The menu screen is displayed in the viewfinder.
> See page 65.

❽ [PHASE H] Horizontal phase control

Use this control to adjust the H sync phase while the genlock signal is input.

❾ [PHASE SC FINE] Color sub-carrier phase control

Use this control to fine-adjust the SC phase while the genlock signal is input.

❿ [PHASE SC COARSE] Color sub-carrier phase coarse adjustment control

Use this control to coarse-adjust the SC phase while the genlock signal is input.
The SC phase will toggle between 0°, 90°, 180° and 270°.
See "Connection with a switcher" on page 80 for ❽ through ❿.

2-3 Right Side Section (Cont'd) (U-ver.)

[Audio Setting Section]

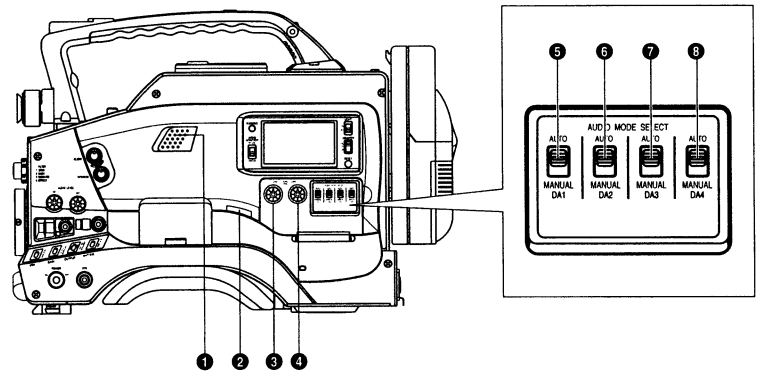

❶ Monitoring loudspeaker

- Enables EE monitoring of the input audio signal during recording, in the record-pause mode or in the stop mode.
- Outputs the playback sound in the playback mode.
- The PCM audio channels to be output can be selected using the ❷ AUDIO MONITOR switch on page 16.
- The loudspeaker volume can be adjusted with the AUDIO MONITOR control.
  The audio from the loudspeaker is defeated when an earphone is plugged into the EARPHONE jack. The warning alarm tones are also output through this loudspeaker.
  For details, see pages 81 and 82.

❷ Lithium Battery Installation Case

Installs a lithium battery in this case. The battery is used for the backup of the time code and the date/time data. The DY-90 is delivered without the battery installed. Install the lithium battery provided (CR2032). See page 34 for information about how to install it.

❸ [DA3 AUDIO LEVEL] control

Adjusts the audio recording level of the [DA3 IN] connector on the rear panel.
The volume can be controlled when ❼ [DA3 AUDIO MODE SELECT] switch is set to MANUAL.

❹ [DA4 AUDIO LEVEL] control

Adjusts the audio recording level of the [DA4 (MIC1 IN)] connector on the left side section.
The volume can be controlled when ❽ [DA4 AUDIO MODE SELECT] switch is set to MANUAL.

❺ [DA1 AUDIO MODE SELECT] switch

Selects the audio recording level adjusting method for the [DA1 IN] connector on the rear panel.

AUTO : The audio recording level is held at the reference level even when sounds greater than the reference input level are input.
The recording level does not increase when the input level is low.

MANUAL : The recording level can be adjusted with ❼ DA1 AUDIO LEVEL control on page 13.

❻ [DA2 AUDIO MODE SELECT] switch

Selects the audio recording level adjusting method for the [DA2 IN (MIC IN)] connector on the front section.

AUTO : The audio recording level is held at the reference level even when sounds greater than the reference input level are input.
The recording level does not increase when the input level is low.

MANUAL : The recording level can be adjusted with ❽ DA2 AUDIO LEVEL control on page 13.

❼ [DA3 AUDIO MODE SELECT] switch

Selects the audio recording level adjusting method for the [DA3 IN] connector on the rear panel.

AUTO : The audio recording level is held at the reference level even when sounds greater than the reference input level are input.
The recording level does not increase when the input level is low.

MANUAL : The recording level can be adjusted with ❸ DA3 AUDIO LEVEL control.

❽ [DA4 AUDIO MODE SELECT] Switch

Selects the audio recording level adjusting method for the [DA4 IN (MIC1 IN)] connector on the front section.

AUTO : The audio recording level is held at the reference level even when sounds greater than the reference input level are input.
The recording level does not increase when the input level is low.

MANUAL : The recording level can be adjusted with ❹ DA4 AUDIO LEVEL control.

2-3 Right Side Section (Cont'd) (E-ver.)

[Audio Setting Section]

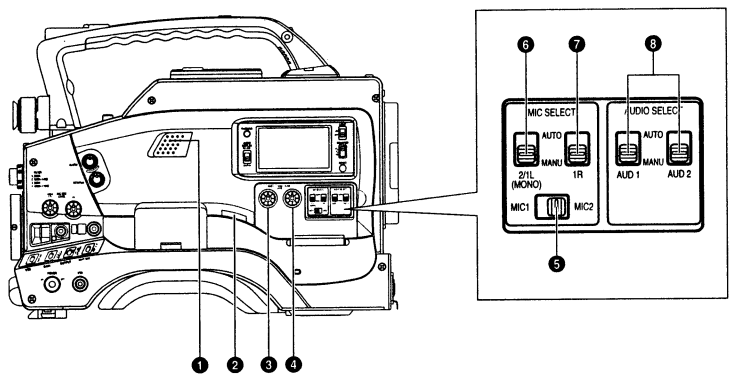

❶ Monitoring loudspeaker
- Enables EE monitoring of the input audio signal during recording, in the record-pause mode or in the stop mode.
- Outputs the playback sound in the playback mode.
- The PCM audio channels to be output can be selected using the ❷ AUDIO DISPLAY switch on page 16.
- The loudspeaker volume can be adjusted with the AUDIO MONITOR control.
  The audio from the loudspeaker is defeated when an earphone is plugged into the EARPHONE jack. The warning alarm tones are also output through this loudspeaker.
  For details, see pages 81 and 82.

❷ Lithium Battery Installation Case
Installs a lithium battery in this case. The battery is used for the backup of the time code and the date/time data. The DY-90 is delivered without the battery installed. Install the lithium battery provided (CR2032). See page 34 for information about how to install it.

❸ [AUD1 LEVEL] control
Adjusts the recording level of the audio signal input to the [AUD 1 IN] terminal on the rear panel. This control is effective when ❽ AUDIO 1 SELECT switch is set to the "AUTO" position.

❹ [AUD2 LEVEL] control
Adjusts the recording level of the audio signal input to the [AUD 2 IN] terminal on the rear panel. This control is effective when ❽ AUDIO 2 SELECT switch is set to the "AUTO" position.

❺ [MIC1/MIC2] select switch
Select the camera's microphone mode with this switch.
MIC1 : Records the audio signal of the microphone connected to the [MIC1] connector.
MIC2 : Records the audio signal of the microphone connected to the [MIC2] connector.

❻ [MIC2/1L (MONO)] auto/manual select switch
Selects the recording level adjusting method for the camera microphones:
- Microphone of MIC 2 connector.
- Monaural microphone of MIC 1 connector
- Stereo microphone L channel of MIC 1 connector
- MIC 1 or MIC 2 can be selected with the ❺[MIC1/MIC2] SELECT switch.

AUTO : The audio recording level is held at the reference level even when sounds greater than the reference input level are input.
The recording level does not increase when the input level is low.
MANU : The recording level can be adjusted with ❼ (MONO) 2/1L REC LEVEL control on page 13.

❼ [MIC1R] auto/manual select switch
This switch selects the recording level adjusting method for the R-channel of the stereo microphone connected to the [MIC1] connector.
AUTO : The audio recording level is held at the reference level even when sounds greater than the reference input level are input.
The recording level does not increase when the input level is low.
MANU : The recording level can be adjusted with ❼ 1R REC LEVEL control on page 13.

❽ [AUD1•2] auto/manual select switch
Selects the recording level adjusting method for the audio signals input to the AUDIO INPUT connectors on the rear panel. Selection is made for each signal input to AUD 1 IN and AUD 2 IN connectors separately.
AUTO : The audio recording level is held at the reference level even when sounds greater than the reference input level are input.
The recording level does not increase when the input level is low.
MANU : The recording level can be adjusted with ❸ or ❹ AUDIO REC LEVEL control.

2-3 Right Side Section (Cont'd)

[VCR Display]

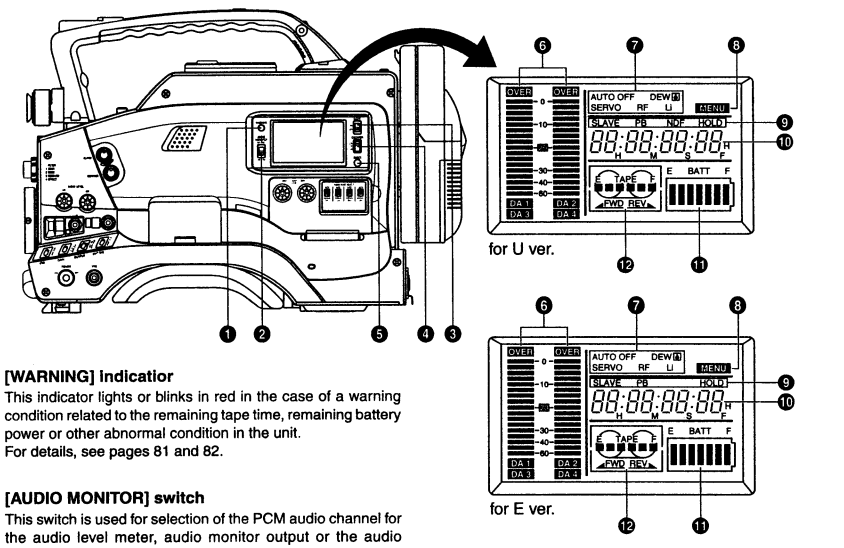

❶ [WARNING] indicator
This indicator lights or blinks in red in the case of a warning condition related to the remaining tape time, remaining battery power or other abnormal condition in the unit.
For details, see pages 81 and 82.

❷ [AUDIO MONITOR] switch
This switch is used for selection of the PCM audio channel for the audio level meter, audio monitor output or the audio playback output.
DA1/DA2 : Audio signals from the PCM audio DA1 and DA2 channels are output.
DA3/DA4 : Audio signals from the PCM audio DA3 and DA4 channels are output.

Note:
Regardless of this switch the DA1/DA2 channel audio signal is in playback the during Search Mode.

❸ [LIGHT] switch
Turns the display back light ON or OFF.
ON : The display is back-lighted.
OFF : The display is not back-lighted.
(Keep this switch to OFF during battery operation of the DY-90 or when it is required to reduce the power consumption for a certain reason.)

❹ [COUNTER] switch
Selects the contents displayed on the LCD counter.
CTL : Set to this position to display the CTL counter.
TC : Set to this position to display time codes or when presetting the time code.
UB : Set to this position to display the user's bits of time codes or presetting the user's bit.

- Time codes or user's bits can be displayed provided that the TC DISP switch in the time code/setup menu setting block is set to TC. If it is set to SUB TC, the date and time data is displayed in its place.

❺ [RESET] button
- Press to reset the CTL counter value.
- Pressing the button during time code or user's bit presetting operation resets the time code or user's bit data to "00:00:00:00".

❻ Audio level meters
- Shows the audio input level of the DA1 and DA2 channels in the record mode or EE mode.
  For selection of the audio channels to be displayed, use the ❷ AUDIO MONITOR switch.
- The peak output level is held for approximately 2 seconds.

Note:
The level meter activated immediately after the power is switched ON. This is not a malfunction.

2-3 Right Side Section (Cont'd)

❼ Warning indicators

■ AUTO OFF indicator
Lights when a non-recoverable error (e.g. tape winding error, drum stopped, etc.) occurs with the VCR. This indicator also lights if condensation occurs.
For details, see "TROUBLES WITH ERROR CODE OUTPUTS" on page 84.

■ DEW indicator
Lights when condensation (dewing) occurs on the drum or other mechanism in the unit.
The unit rejects all operations while this indicator is lit.
When the condensation has disappeared, the indicator turns off and the unit accepts operations again.

■ SERVO indicator
Lights when the drum servo is troubled during recording to indicate that normal recording is not being made.

■ RF indicator
Lights when the video head is clogged.
The head clog is detected during back-space between different scenes. Note that it is not detected during recording.

- Should this indicator light up, clean the head using the special head cleaning tape.
  See the manual for the head cleaning tape (DCL-5) which is specifically made for this unit.

■ Li indicator
This is the lithium battery indicator which lights when the lithium battery which backs up data of the built-in time code generator is nearly exhausted and indicate the necessity of replacement.
See page 34 for information about How to Replace Backup Lithium Batteries.

❽ MENU indicator

This indicator lights when the setup menu mode is engaged by pressing ❶ MENU button on page 18.

❾ Time code-related indicators

■ SLAVE indicator
This is the slave lock indicator which lights when the built-in time code generator is slave-locked (synchronized) with the LTC time code signal input at the TC IN connector.
For the slave lock of the time code, see page 58.

■ PB indicator
This is the time code playback indicator which lights when the time code is in playback mode.

■ NDF indicator (U-ver. only)
This is non-drop frame indicator which lights when the framing mode of the built-in time code generator or the reproduced time code in play mode is in the non-drop frame mode.
This indicator does not light in drop frame mode.
• If lights permanently when the CTL counter is in use.

■ HOLD indicator
Lights when the time code generator display is held by pressing the HOLD button in the time code setting block.
The time code or user's bit can be preset while this indicator is lit.

❿ Counter display

- Usually, this section shows the data of the CTL counter, time code or user's bit. The display mode can be selected with the ❹ COUNTER switch.

* With the COUNTER switch set to "TC" or "UB", when ❽ TC DISP switch on page 18 is set to the "SUB TC" position, time and date are displayed.

- Displays the setup menu data when the DY-90 is in the setup menu mode by pressing ❶ MENU button on page 18. The setup menu includes the hour meter (drum operating time).

- This section shows an error code when an abnormal condition occurs with the VCR.
  For details on the counter display, see page 22.

⓫ Remaining battery power indicator

Shows the remaining battery power with a 7-dot segment bar display.
- To display the remaining battery power accurately, set the setup menu item "BATT. TYPE SELECT" according to the type of the battery pack in use.
  For details on the remaining battery power display, see page 22.

⓬ Cassette/tape direction/remaining tape time indicators

- Cassette tape : Lights when the unit is loaded with a cassette tape. Blinks during ejection or tape loading.

- Tape direction : One of the indicators lights according to the tape transport direction.

◀FWD REV▶

- Remaining tape : The remaining tape situation is shown with a 6-dot segment bar display.

E TAPE F

For details on the remaining tape display, see page 22.

2-3 Right Side Section (Cont'd)

[VCR Setup Block]

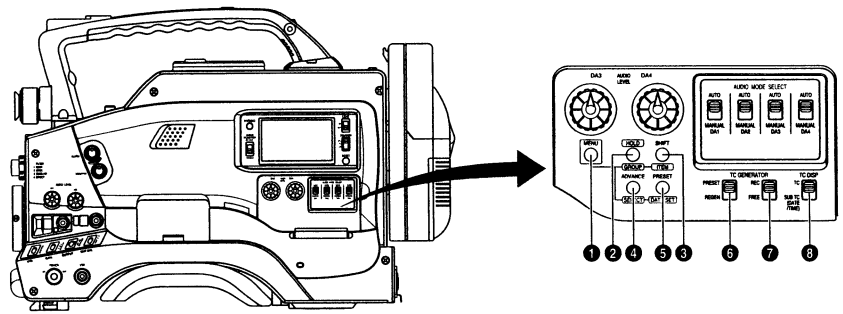

❶ [MENU] button

Press this button to enter the setup menu mode.
When the setup menu mode is engaged, the "MENU" indicator in the LCD display lights and the counter display is changed to the menu indication.
In the setup menu mode, pressing this button resumes the normal mode.

❷ [HOLD/GROUP] button

- Press when presetting the time code or user's bit. The presently displayed data is held (the HOLD indicator lights on the display) and the leftmost digit of the counter blinks. Pressing this button during time code or user's bit presetting cancels the operation and recalls the previous display contents.
- In setup menu mode, this button is used to select the menu group.

❸ [SHIFT/ITEM] button

- During time code or user's bit presetting, press to select the digit to be set. Each press of the button shifts the digit to be set (which blinks) to the right.
- In setup menu mode, this button is used to select the menu item.

❹ [ADVANCE/SELECT] button

- During time code or user's bit presetting, press to select the value of the digit to be set. Each press of the button increases the number by 1.
- In setup menu mode, this button is used to select the value of a menu item.

❺ [PRESET/DATA SET] button

- During time code or user's bit presetting, press to save the set value in the preset memory. The set time code or user's bit will be preset in the time code generator.
- In setup menu mode, this button is used to save the menu item setting the data in the memory.

- For details of the time code or user's bit presetting, see page 56.
- For details on the setup menus, see page 62.
- The buttons from ❷ to ❺ above are also used in setting the date and time of SUB TC data. For the date and time setting, see page 61.

Time code generator setting switches

❻ [PRESET/REGEN] switch

Selects the time code generator mode between PRESET and REGEN.

PRESET : Preset mode. Set to this position when newly presetting and recording the time code. Also use this position when the unit is to be slave-locked to an external time code generator connected to the TC IN connector.

REGEN : Regeneration mode, in which the unit reads existing time codes on the tape and records time codes by succeeding them. Set to this position when you want to connect additional time codes to a tape in which time codes have already been recorded as far as the middle.

❼ [REC/FREE] run switch

Selects the time code running mode while the time code generator is in preset mode. This switch is not effective in the REGEN mode.

REC : The time code runs only during recording. This position allows you to record continual time codes when recording scenes one after another.

FREE: The time code runs permanently. Set to this position when the unit is slave-locked with an external time code generator.
- If this position is used when recording scenes one after another, the time codes become discontinuous at the change points between scenes.

❽ [TC DISP] switch

When the ❹ COUNTER switch on page 16 is set to TC or UB, it selects the type of time code to be displayed on the counter display.

TC : Ordinary time codes or user's bits are displayed.

SUB TC : Data in another time code area (sub-time code area) is displayed. This unit records the date and time data in this area.
For details, see "SUB-TIME CODE" on page 60.

2-4 Top Section

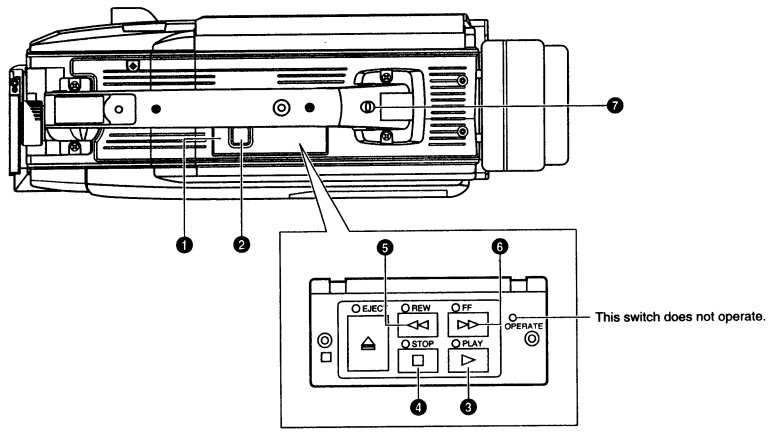

❶ Operation cover
Open this cover when operating the playback mode. Otherwise keep this cover closed.

❷ [EJECT] button
Press to eject the cassette tape. It can be pressed even when the operation cover is closed. The LED indicator above the EJECT button lights up during the ejection operation.

❸ [PLAY] button
Press to start playback. In play mode, the unit outputs the video and audio signals of normal playback and the LED indicator above the PLAY button lights.
* If the auto tracking is active at the moment the play mode starts, the playback video will be interfered with digital noise. The audio output during this period is the linear track audio. The same audio signals as the PCM audio DA1/DA2 channels are recorded on the linear tracks of the tape. The PCM audio DA3 and DA4 channels are not recorded on the linear tracks.

❹ [STOP] button
Press to enter stop mode. The drum keeps rotating in stop mode. However, when stop mode has continued for about 30 minutes, the VCR section enters tape protect mode, in which the drum stops rotation and the tape tensioner is released. It takes more time than usual to enter the record or play mode from the tape protect mode. The LED indicator above the STOP button lights in stop and tape protect modes.
- The time until tape protect mode is initiated can be set to 1, 5 or 30 minutes with setup menu item "LONG PAUSE TIME SELECT".

❺ [REW] button
Press to rewind tape.
- Pressing the button in stop or fast forward mode initiates rewind mode. The LED indicator above the REW button lights in this mode.
- Pressing the button during playback or forward search initiates reverse search at about 6 times the normal play speed. The LED indicators above the PLAY and REW buttons light during reverse search.
  The search audio recorded in the linear track is reproduced during reverse search.

❻ [FF] button
Press to fast forward tape.
- Pressing the button in stop or rewind mode initiates fast forward mode. The LED indicator above the FF button lights in this mode.
- Pressing the button during playback or reverse search initiates forward search at about 6 times the normal play speed. The LED indicators above the PLAY and FF buttons light during forward search.
  The search audio recorded in the linear track is reproduced during forward search.

❼ Back tally lamp
This lamp lights up when this unit enters the record mode. It blinks during the transition to the record mode. It also blinks when an error occurs on the DY-90.
- This lamp does not light up when the "BACK TALLY" item in the camera's main menu screen is set to OFF. (See page 67.)

Note:
The buttons ❷ ~ ❻ are not effective during recording.

2-5 Rear Section

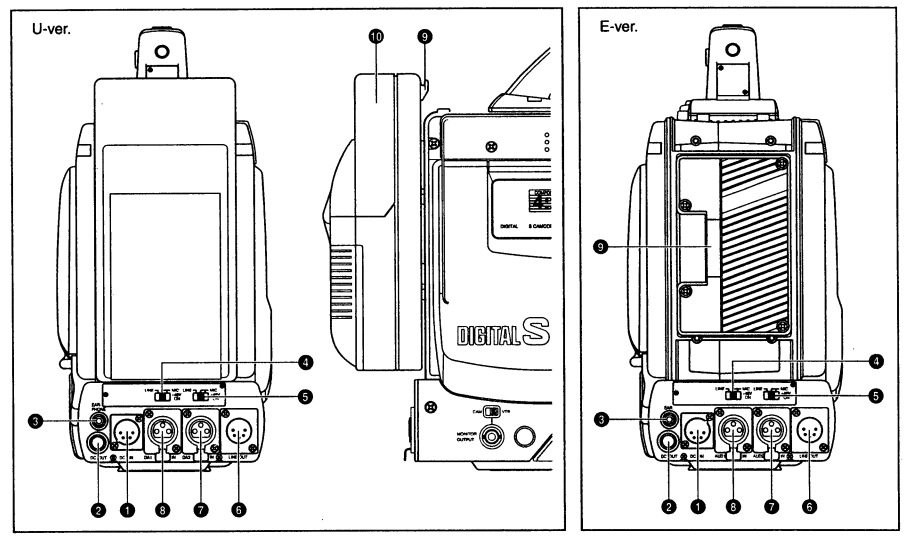

❶ [DC IN] connector (XLR 4-pin)
Power input connector for 12 V DC. Connect with the optional AA-G10 or AA-P250 battery charger.
When a cable is connected here, the power supply from the battery pack is interrupted and the source is switched to the power supplied through this connector.

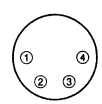

NO.	Signal
①	GND
②	—
③	—
④	DC12V

❷ [DC OUT] connector
Power output connector to a wireless microphone transmitter, etc. The supply voltage is identical to the voltage supplied to the unit (DC 12V max. 0.1 A).

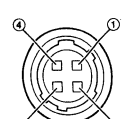
(Surface profile)

NO.	Signal
①	GND
②	—
③	—
④	DC12V (Power through)

❸ [EARPHONE] earphone jack
This is a stereo mini-jack for use in connecting an audio monitoring earphone. Plug in a 3.5 mm dia. earphone or headphone plug.
The earphone can also be used to monitor alarm tones depending on situations.
The sound from the monitoring loudspeaker is interrupted when an earphone is connected here.

❹ [DA1 IN LINE/MIC] select switch (U-ver.)
Select the audio signal input to the ❽ DA1 IN connector.
LINE : Set to this position when connected to the audio equipment, etc. The reference input level is +4 dBs.
MIC : Set to this position when the microphone is connected. The reference input level is -60 dBs.
MIC +48V ON : Set to this position when the microphone requiring +48 V power supply (JVC MV-P615, etc.) is connected.
A +48 V DC is supplied from this connector.

❹ [AUD1 IN LINE/MIC] select switch (E-ver.)
Select the audio signal input to the ❽ AUD1 IN connector.
LINE : Set to this position when connected to the audio equipment, etc. The reference input level is +4 dBs.
MIC : Set to this position when the microphone is connected. The reference input level is -60 dBs.
MIC +48V ON : Set to this position when the microphone requiring +48 V power supply (JVC MV-P615, etc.) is connected.
A +48 V DC is supplied from this connector.

2-5 Rear Section (Cont'd)

❺ [DA3 IN LINE/MIC] select switch (U-ver.)

Select the audio signal input to the ❼ DA3 IN connector.

LINE : Set to this position when connected to the audio equipment, etc. The reference input level is +4 dBs.

MIC : Set to this position when the microphone is connected. The reference input level is -60 dBs.

MIC : Set to this position when the microphone requiring

+48V ON +48 V power supply (JVC MV-P615, etc.) is connected.
A +48 V DC is supplied from this connector.

❺ [AUD2 IN LINE/MIC] select switch (E-ver.)

Select the audio signal input to the ❼ AUD2 IN connector.

LINE : Set to this position when connected to the audio equipment, etc. The reference input level is +4 dBs.

MIC : Set to this position when the microphone is connected. The reference input level is -60 dBs.

MIC : Set to this position when the microphone requiring

+48V ON +48 V power supply (JVC MV-P615, etc.) is connected.
A +48 V DC is supplied from this connector.

❻ [LINE OUT] connector (XLR 5-pin)

Outputs the PCM audio DA1/DA2 or DA3/DA4 channel signals in analog audio.
The audio channels to be output can be selected by the ❷ AUDIO MONITOR switch on page 16.

- Outputs the input audio signal in the record, record-pause and stop modes.
- Outputs the playback audio signal in the playback mode.
- Alarm sound is not output.

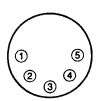

NO.	Signal
1	GND
2	DA1/3 (H)
3	DA1/3 (C)
4	DA2/4 (H)
5	DA2/4 (C)

❼ [DA3 IN] DA3 input connector (XLR 3-pin) (U-ver.)

Connect the external audio equipment or microphone to this connector. Set the ❺ DA3 IN LINE/MIC select switch according to the connected equipment.
The audio signal from this connector is recorded on the DA3 of the PCM audio channel.
* It is not recorded on the linear track of the tape for audio search.

❼ [AUD2 IN] Audio 2 input connector (XLR 3-pin) (E-ver.)

Connect the external audio equipment or microphone to this connector. Set the ❺ AUD 2 IN LINE/MIC select switch according to the connected equipment.

❽ [DA1 IN] DA1 input connector (XLR 3-pin) (U-ver.)

Connect the external audio equipment or microphone to this connector. Set the ❹ DA1 IN LINE/MIC select switch according to the connected equipment.
The audio signal from this connector is recorded on the DA1 of the PCM audio channel.
It is recorded on the linear track of the tape for audio search.

(AUDIO IN connector)

NO.	Signal
1	GND
2	HOT
3	COLD

❽ [AUD1 IN] Audio 1 input connector (XLR 3-pin) (E-ver.)

Connect the external audio equipment or microphone to this connector. Set the ❹ AUD 1 IN LINE/MIC select switch according to the connected equipment.

For information about which channel of the tape the audio signal from the audio input connectors ❼, ❽ is recorded, see page 64.

(AUDIO IN connector)

NO.	Signal
1	GND
2	HOT
3	COLD

❾ Battery case release button

Push to unlock the battery case cover. The battery case cover should be opened while pushing this button.

❾ Battery holder

Mount the Anton-Bauer battery pack here.
For battery information and the attaching/detaching method of the battery, see page 35.

❿ Battery case

Load a Flat Shape Type battery pack or the JVC NB-G1U battery pack.
For details, see "USING JVC'S NB-G1 OR FLAT SHAPE TYPE BATTERY PACK" on page 36.

2-6 Counter Display Contents (U-ver.)

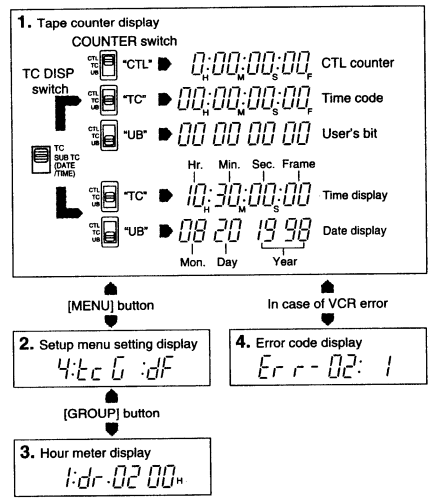

The counter display shows the following 4 types of information.

1. Tape counter display

The counter display usually functions as a tape counter (hour, minute, second, frame). It can be switched to a CTL counter, time code or user's bit display by using the COUNTER switch. (Provided that the TC DISP switch is set to TC)

- CTL counter : Time between –9 hr. 59 min. 59 sec. 29 frames and 9 hr. 59 min. 59 sec. 29 frames can be displayed.
- Time code : Time between 0 hour and 23 hr. 59 min. 59 sec. 29 frames can be displayed.
- User's bit : Hexadecimal number from 0 to F is displayed in 8 digits.

By setting the TC DISP switch under a cover on the right side panel to SUB TC, the time and date data can be displayed here.

- When the COUNTER switch is set to
  TC : The time (hour, minute, second, frame) is displayed.
  UB : The date : (month, day, year) is displayed.

- Press the MENU button to switch to the VCR setup menu setting display.

2. Setup menu setting display

This display is used when setting the setup menus.
After having set the setup menus, press the MENU button to return to the tape counter display.
For details, see "VCR SETUP MENUS" on page 63.

3. Hour meter display

The hour meter is displayed in the setup menu Group 1.
The hour meter data refers to the head drum running time.

4. Error code display

The error code is displayed automatically in case an abnormal condition occurs with the VCR section.
For details of error codes, see "TROUBLES WITH ERROR CODE OUTPUTS" on page 84.

Remaining Tape Time Display

The 6-dot segment bar display shows the remaining tape time in record and play modes. The lighted segment bars decrease as the remaining tape decreases.
The reference tape time is as shown below.
(■ : Lighted. ⁘ : blinked.

E TAPE F ■■■■■■	Near the beginning of tape
E TAPE ■■■■■■	More than 25 minutes of remaining tape. ("F" extinguished.)
E TAPE ■■■□□□	10 to 15 minutes of remaining tape. (This display represents the begining of the tape in the case of DS-10 tape.)
E TAPE ■□□□□□	2 to 5 minutes of remaining tape.
E TAPE ■□□□□□	Less than 2 minutes of remaining tape. (The last dot and "TAPE" blink.)
E TAPE □□□□□□	End of tape. ("TAPE" and "E" blink.)

- When the tape has ended completely, a warning is provided by an alarm tone, etc.
- The remaining tape information is not displayed when no cassette tape is loaded or during the remaining tape calculation which takes place immediately after a cassette tape is inserted.

Remaining Battery Power Display

The 7-dot segment bar display shows the remaining battery power. The lighted segment bars decrease as the remaining battery power decreases.

- To display the remaining battery power accurately, set the setup menu item "BATT. TYPE SELECT" according to the type of the battery pack in use.

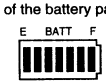

All segment bars light when a fully-charged battery pack is attached.

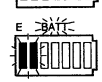

The last 2 segment bars and "BATT" start to blink when the battery is nearly exhausted. Replace with a fully-charged battery pack.

When the battery capacity has run out, "E" and "BATT" blink and the unit stops operation automatically.

2-6 Counter Display Contents (E-ver.)

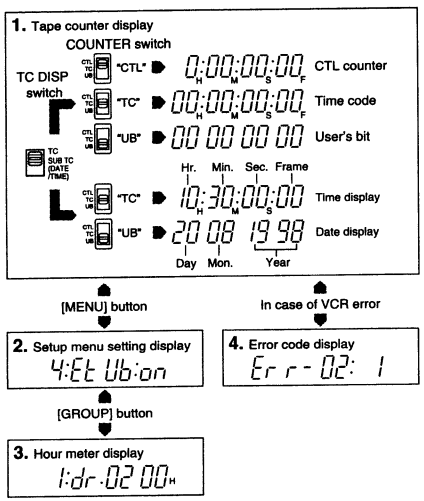

The counter display shows the following 4 types of information.

1. Tape counter display
The counter display usually functions as a tape counter (hour, minute, second, frame). It can be switched to a CTL counter, time code or user's bit display by using the COUNTER switch. (Provided that the TC DISP switch is set to TC)
- CTL counter : Time between –9 hr. 59 min. 59 sec. 24 frames and 9 hr. 59 min. 59 sec. 24 frames can be displayed.
- Time code : Time between 0 hour and 23 hr. 59 min. 59 sec. 24 frames can be displayed.
- User's bit : Hexadecimal number from 0 to F is displayed in 8 digits.

By setting the TC DISP switch under a cover on the side panel to SUB TC, the time and date data can be displayed here.
- When the COUNTER switch is set to
  TC : The time (hour, minute, second, frame) is displayed.
  UB : The date : (day, month, year) is displayed.

- Press the MENU button to switch to the VCR setup menu setting display.

2. Setup menu setting display
This display is used when setting the setup menus.
After having set the setup menus, press the MENU button to return to the tape counter display.
For details, see "VCR SETUP MENUS" on page 63.

3. Hour meter display
The hour meter is displayed in the setup menu Group 1.
The hour meter data refers to the head drum running time.

4. Error code display
The error code is displayed automatically in case an abnormal condition occurs with the VCR section.
For details of error codes, see "TROUBLES WITH ERROR CODE OUTPUTS" on page 84.

Remaining Tape Time Display

The 6-dot segment bar display shows the remaining tape time in record and play modes. The lighted segment bars decrease as the remaining tape decreases.
The reference tape time is as shown below.
(■ : Lighted. ⁘ : blinked.

E TAPE F ■■■■■■	Near the beginning of tape
E TAPE ■■■■■■	More than 25 minutes of remaining tape. ("F" extinguished.)
E TAPE ■■■□□□	10 to 15 minutes of remaining tape.
E TAPE ■□□□□□	2 to 5 minutes of remaining tape.
E TAPE ■□□□□□	Less than 2 minutes of remaining tape. (The last dot and "TAPE" blink.)
E TAPE □□□□□□	End of tape. ("TAPE" and "E" blink.)

- When the tape has ended completely, a warning is provided by an alarm tone, etc.
- The remaining tape information is not displayed when no cassette tape is loaded or during the remaining tape calculation which takes place immediately after a cassette tape is inserted.

Remaining Battery Power Display

The 7-dot segment bar display shows the remaining battery power. The lighted segment bars decrease as the remaining battery power decreases.
- To display the remaining battery power accurately, set the setup menu item "BATT.TYPE SELECT" according to the type of the battery pack in use.

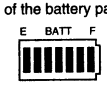

All segment bars light when a fully-charged battery pack is attached.

The last 2 segment bars and "BATT" start to blink when the battery is nearly exhausted. Replace with a fully-charged battery pack.

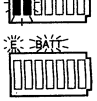

When the battery capacity has run out, "E" and "BATT" blink and the unit stops operation automatically.

2-7 Lens (optional)

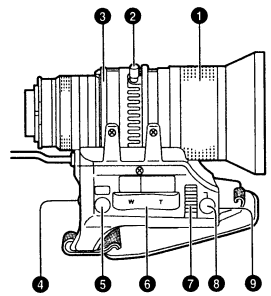

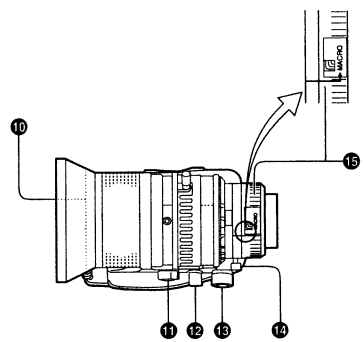

❶ FOCUS ring
Manual focus ring.

❷ ZOOM lever/ring
This is the manual zoom ring equipped with a zoom lever. To activate the zoom feature on, turn the zoom mode knob ⓫ to position "M".

❸ IRIS ring
Manual Irisi ring. To activate the auto iris feature, set the Iris Mode switch ❼ to A.

❹ [VTR] Trigger button
To start shooting push once.
To stop shooting push again.

❺ [RET] return video button
The return video signal from the VCR section can be monitored on the viewfinder only while pushing this button.
- The Viewfinder Status display is not available during this operation.

❻ ZOOM servo control lever
Pushing this lever in the W direction makes the lens move wider.
Pushing this lever in the T direction makes the lens move tighter.
Pushing harder changes the speed of the Zoom. To operate the servo zoom feature with this lever, set the ZOOM knob ⓫ to S.

❼ IRIS mode switch
A : Activates the auto iris feature.
M : Allows manual iris control.

❽ Momentary auto iris button
When the IRIS MODE switch is at M, pushing this button activates the Auto Iris Function while it is held down only.

❾ IRIS speed adjusting control
Adjusts the iris operation speed.

❿ FILTER screw
Protect the lens with a Clear or UV filter by screwing on to the front inside of the lens hood.
Other filters can be used for various effects.

⓫ ZOOM mode knob
S : Servo Zoom mode. Allows operation by the Zoom Servo Control lever ❻.
M : Manual Zoom mode. Allows zoom control by the Zoom lever/ring ❷.

⓬ REMOTE FOCUS control connector
To connect with an optional focus servo unit.

⓭ ZOOM servo connector
Connect with an optional zoom servo unit.

⓮ BACK FOCUS ring/fixing screw
For Set-up Back Focus adjustment only.
Secure with the Screw knob after adjustment.

⓯ Macro focusing ring (for close-up shooting)
By rotating this ring in the direction of the arrow, the lens becomes capable of close-up shooting of very small objects.
Normal focus adjustment and zooming are not available in the macro mode.
To shoot images in the macro mode, set the focus ring to the infinite position and the zoom ring to the widest angle position.
To adjust the focus of the macro image, rotate this ring in the direction of arrow until the object is focused.

CAUTION :
The back-focus knob is located close to the macro ring, be careful not to mistake the back-focus knob for the macro ring. After the required operation, be sure to return the macro ring to the normal position.

2-8 1.5-Inch Viewfinder VF-P116 (optional)

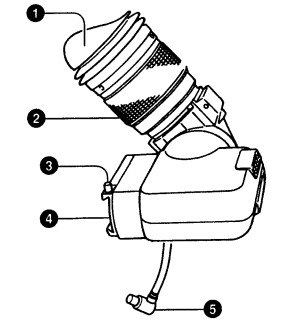

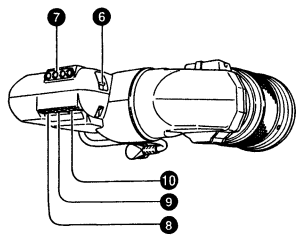

❶ Eyepiece
Blocks light to viewfinder screen and holds eye optics.
The Eyepiece can be opened to view the screen directly.

❷ Eyepiece focusing ring
Rotate this ring to adjust the viewing angle.
Be sure to adjust this ring because the viewing angle affects the lens focus adjustment.
To perform more reliable focus adjustment, it is recommended to turn on the contour with the PEAKING control ❽.

❸ Stopper screw
This stopper screw prevents the viewfinder from coming off the camera.

❹ Viewfinder shoe
Attaches to the Viewfinder Mount base on camera.

❺ Cable
Connect to camera viewfinder connector.

❻ Tally switch
Set this switch to off if you do not want to inform the subjects by the Tally light that they are being recorded.
ON : Lights the Tally lamp ❼ during recording.
OFF : Does not light the Tally lamp ❼ .
However, the REC lamp at the eyepiece will not turn off.

❼ Tally light
Lights when recording is in progress.
The light does not come on when the Tally Switch ❻ is at "OFF".

❽ [PEAKING] peaking (contour) control
Rotate to adjust the contour of the viewfinder screen image.

❾ [CONT] contrast
Controls the level of Viewfinder contrast.

❿ [BRIGHT] brightness
Controls the level of Viewfinder brightness.

2-9 Viewfinder Display

WARNING INDICATORS INSIDE THE VIEWFINDER

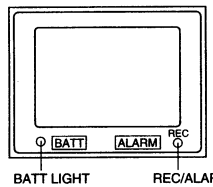

The viewfinder has two LED indicators below the screen. These LEDs light or blink to indicate the present status of the camera or the VCR's camera control unit.

- **[BATT] BATTERY LIGHT**
  This blinks red when battery voltage becomes too low for the camera to operate.
  This lights when the battery has run out.
- **REC/ALARM LIGHT**
  This lights green for these conditions.
  Solid Green : While recording.
  Blinks Green : • While the VCR prerolls before recording.
  • If the Tape is finishing.
  • If the VCR Malfunctions

VIEWFINDER SCREEN DISPLAY

The viewfinder screen displays the following information, however, these are not displayed during VCR playback.

- Status screens (screens for use in checking the current camera setup)
- Alarm message display
- Safety zone display
- Setting screen (screen for use in the camera setup)
- Auto white balance display
- Shutter speed display

■ Status Screens

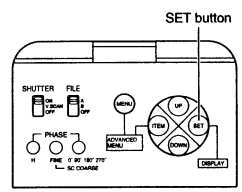

Press the SET button during normal screen to display one of the status screens on the viewfinder. One of the three status screens will be displayed every time the button is pressed.

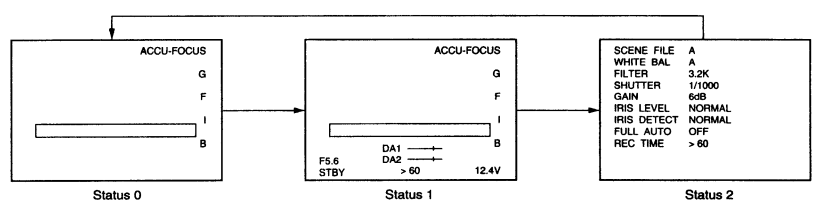

2-9 Viewfinder Display (Cont'd)

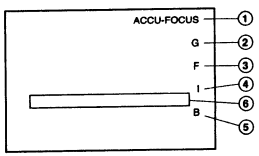

Status 0

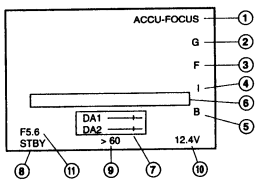

Status 1 (U-ver.)

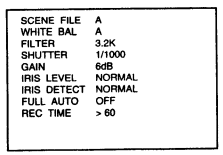

Status 2

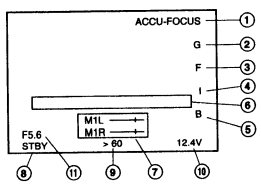

Status 1 (E-ver.)

● Status 0

Display Position	Display	Function
①	ACCU-FOCUS	Blinking or displayed during the ACCU-FOCUS operation.
	S	Displayed when the Shutter or V. Scan is ON.
	FAS	Displayed when the Full Auto Shooting is ON.
	ALC	Indicator which appears when the individual ALC is ON.
②	G	Displayed in other modes than 0 dB, LOLUX and ALC.
	L	Displayed during LOLUX operation.
③	F	Displayed when the FAW is ON.
④	I	Displayed when the Auto iris level is set to the back light or spotlight operation.
⑤	B	Displayed during the black stretch or black compression switch operation.
⑥	Event display	See the table below.

⑥ Event display

Event is displayed for only about 2 seconds on the viewfinder screen when any of the following switches is operated.

Switch	Event Display Contents	
ZEBRA	ZEBRA	ON, OFF
BLACK STRETCH/ BLACK COMPRESS	BLACK	STRETCH, NORMAL, COMPRESS
GAIN	GAIN	–3 dB, 0 dB, 6 dB, 9 dB, 12 dB, 18 dB, ALC
WHT. BAL	WHITE BAL	A, B, PRESET, FAW
FULL AUTO	FULL AUTO	ON, OFF
IRIS	IRIS	BACK.L, NORMAL, SPOT.L
LOLUX	LOLUX	ON, OFF
FILTER control	FILTER	3.2K, 5.6K, 5.6K+ND, EFECT
FILE	SCENE FILE	A, B, OFF
VTR	VTR	STBY, SAVE
AUTO KNEE	AUTO KNEE	ON, OFF

2-9 Viewfinder Display (Cont'd)

● Status 1

In addition to the information on the status 0 screen, this screen displays information on the audio indicator, accumulated recording time, voltage and lens F number.

Display position	Display	Function
⑦ (U-ver.)	DA1- - - + - - DA2- - - + - - (example)	Shows the audio input channel and input level. Input channel indication is changed depending on the setting of the AUDIO MONITOR switch. Display ON/OFF can be selected by the menu screen. For details on "AUDIO DISPLAY", see page 67.
⑦ (E ver.)	M1L- - - + - - M1R- - - + - - (example)	Shows the audio input channel and input level. Input channel indication is changed depending on the setting of the AUDIO DISPLAY switch. Display ON/OFF can be selected by the menu screen. For details on "AUDIO DISPLAY", see page 67.
⑧	STBY SAVE STOP REC FF REW EJECT	VCR in standby mode VCR in save mode VCR in stop mode VCR in record mode VCR in fast-forward mode VCR in rewind mode VCR in eject mode
⑨	> 60 (Example) $12_H\ 34_M\ 56_S\ 20_F$	Remaining tape indication (displayed in 1-minute steps) Time code display Time code display is available when the "REC TIME" item on the advanced menu screen is set to TIME CODE. For details on "REC TIME", see page 69.
⑩	12.4 V (example) 50 % (example)	Voltage indication (displayed in 0.1 V steps) When an Anton-Bauer battery is connected and if the remaining battery power is detected, it shows the remaining battery power displayed as a percentage (%) figure. (In this case, the voltage indication is not displayed.)
⑪	OPEN, F2, F2.8, F4, F5.6, F8, F11, F16, CLOSE	Shows the F number of the connected lens. It is not displayed when the lens is removed. Also for some lenses, no display appears. Display ON/OFF can be selected in the menu screen. For details on "F NO DISPLAY", see page 67.

Note:
The level meter activated immediately after the power is switched ON. This is not a malfunction.

● Status 2

This screen displays the camera setup.
Event display is not available while this screen is displayed.

Display	Display Contents
SCENE FILE	A, B, OFF
WHITE BAL	A, B, PRESET, FAW
FILTER	3.2K, 5.6K, 5.6K+1/16ND, EFECT (U ver.) 3.2K, 5.6K, 5.6K+1/4ND, 5.6K+1/16ND (E ver.)
SHUTTER	OFF, 1/100 (U-ver.) / 1/120 (E ver.), 1/250, 1/500, 1/1000, 1/2000, V.SCAN(1/60.5 to 1/1966.7) ; U-ver/(1/50.4 to 1/1953.1) ; E-ver, EEI (in ALC mode)
GAIN	–3 dB, 0 dB, 6 dB, 9 dB, 12 dB, 18 dB, LOLUX, ALC
IRIS LEVEL	BACK.L, NORMAL, SPOT L
IRIS DETECT	NORMAL, PEAK, AVG
FULL AUTO	ON, OFF
REC TIME	Tape remaining time or time code

2-9 Viewfinder Display (Cont'd)

■ Alarm Message Display

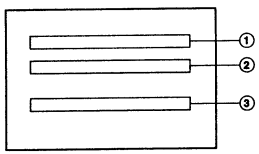

The following alarm messages are displayed on the status 0 and status 1 screens.

Display position	Display	Contents
①	LOW BATTERY	The battery capacity is nearly exhausted.
②	VTR WARNING [HEAD]	Head clog
	VTR WARNING [SERVO]	Servo error
	VTR WARNING [DEW]	Condensation
	VTR WARNING [HARD]	Hardware error
③	TAPE NEAR END	Tape remaining time is less than approx. 3 minutes in the record mode
	TAPE END	Tape end reached
	REC INHIBIT	VTR trigger is pressed with a non-recordable cassette (REC switch on the back of the cassette is set to OFF) loaded
	NO TAPE	VTR trigger is pressed with no tape

2-9 Viewfinder Display (Cont'd)

■ Safety Zone

Three types of safety zone can be displayed in the viewfinder. Select the required one with the SAFETY ZONE item on the main menu screen.

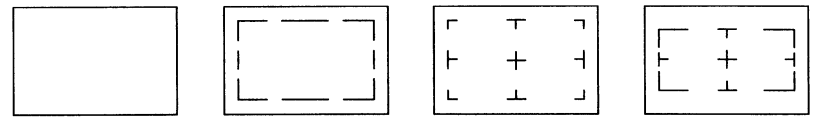

OFF ZONE 1 ZONE 2 ZONE 3

■ Setting the Screen Display

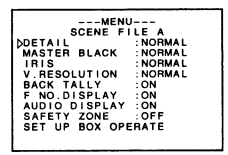

Screen for use in the date setting and other camera setups.
See the flow of MENU screen on page 65.

■ Auto White Balance Display

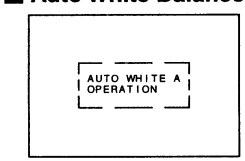

This screen appears during the auto white balance adjustment operation to display various data.
See "White Balance Adjustment" on page 44.

■ Shutter Speed Display

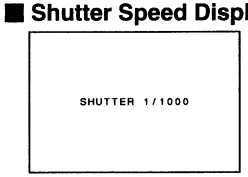

When the SHUTTER is on, a shutter speed is displayed. (for approx. 5 sec.)
Also, whenever the shutter speed is altered by using the UP/DOWN button, the shutter speed is displayed.
While this is displayed, other displays disappear.
See [SHUTTER] on page 14.

3. BASIC SYSTEM CONNECTIONS AND ADJUSTMENTS

3-1 Basic System (U-ver.)

- For information on connection with the individual attatchments, refer to the page describing the method for their respective connection.

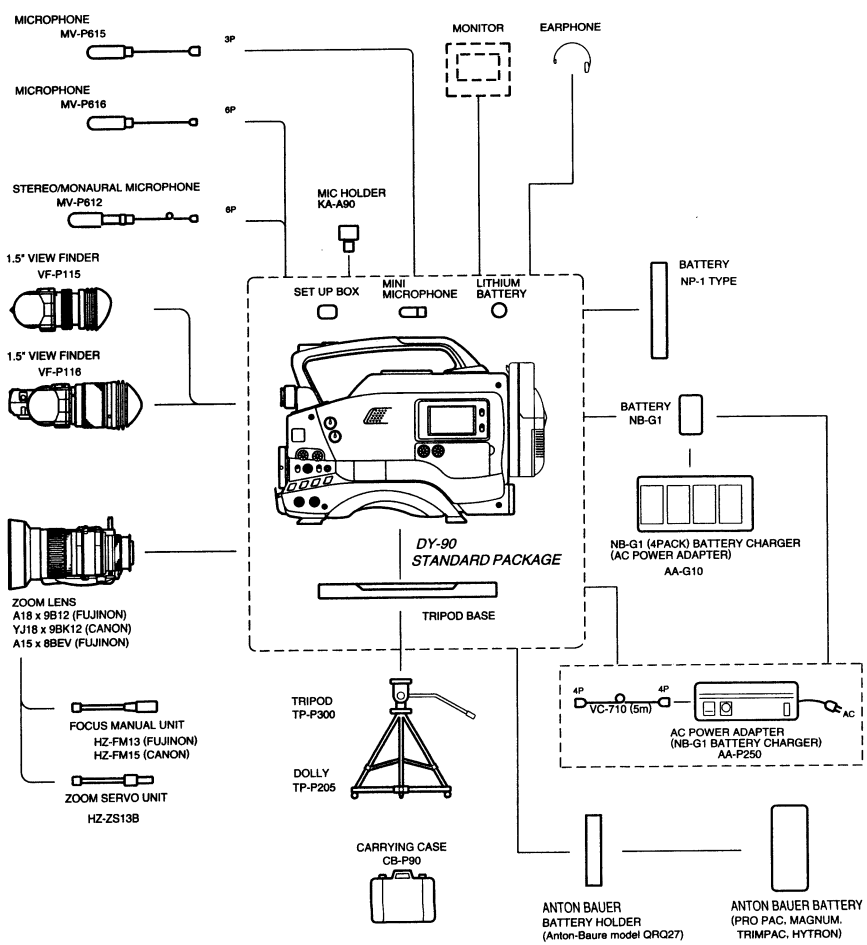

3. BASIC SYSTEM CONNECTIONS AND ADJUSTMENTS

3-1 Basic System (E-ver.)

- For information on connection with the individual attatchments, refer to the page describing the method for their respective connection.

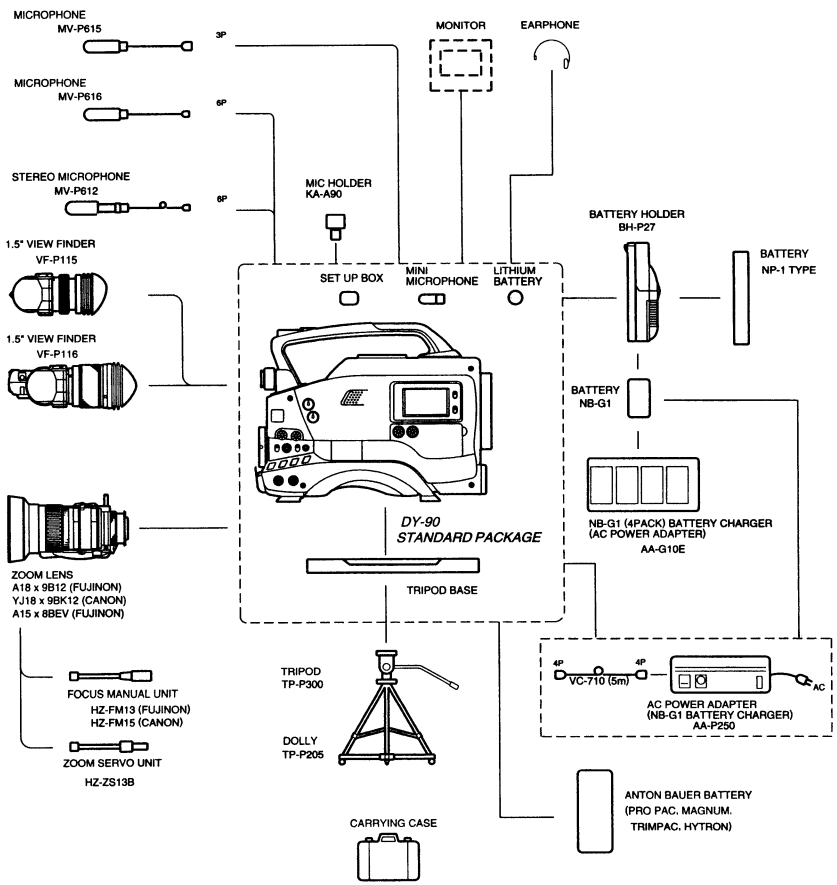

3-2 Attaching the Zoom Lens (optional)

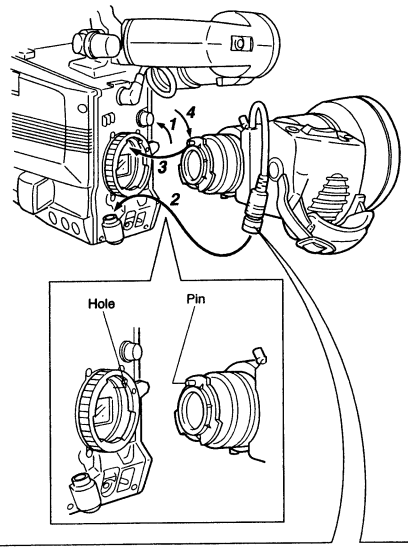

When unplugging the cable, grasp this portion and pull up.
If you have any difficulty, it may be better to remove the lens itself first. In this case, be careful not to drop the lens.

1. Loosen the mount ring.

2. Connect the cable.

3. Attach the lens with its pin aligned with the hole in the mount.

4. Tighten the mount ring.

3-3 Attaching the Viewfinder (optional)

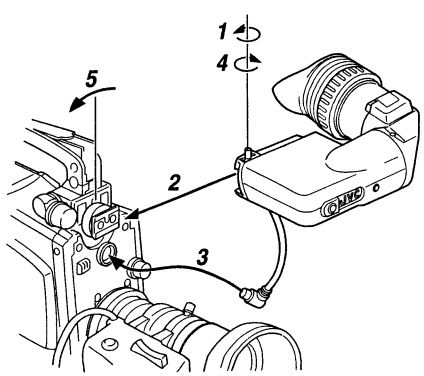

1. Loosen the stopper screw.

2. Attach the viewfinder with its guide aligned with the shoe.

3. Connect the cable.

4. Tighten the stopper screw.

5. Tighten the ring.

3-4 Attaching the Microphone

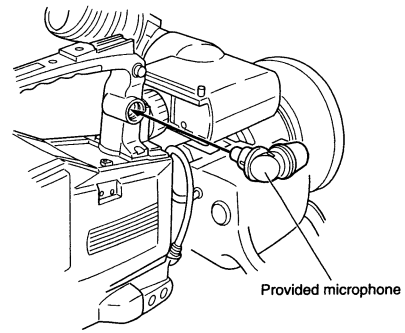

Connecting the provided microphone

Connect the provided microphone to the DA4(MIC1) connector (6-pin).

3-5 Attaching the Tripod Base

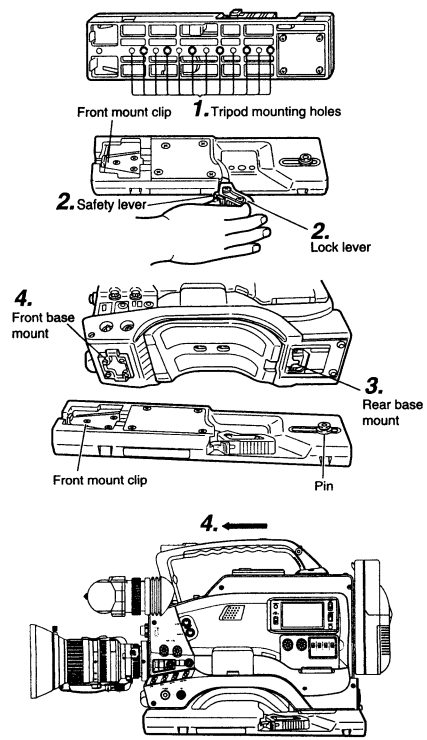

1. Attach the tripod base on the tripod by using the hole which balances the unit most optimally.

2. While pushing the safety lever, pull the lock lever toward the front until the front mount clip clicks into place.

3. Place the unit on the tripod base by aligning the rear base mount of the unit with the pin on the tripod base.

4. Push the unit from the upward direction and slide it toward the front so that the front base mount of the unit is locked by the front mount clip of the tripod base as it clicks into place.

CAUTION :

- The front base mount may be locked while the pin of the tripod base is not inserted into the hole on the rear base mount of the unit. Therefore, after mounting, make sure that these parts are engaged properly.
- When moving the unit which is mounted on a tripod, any impact or vibration should be avoided as this may cause the unit to become detached and to drop from the tripod. Be sure to remove the unit from the tripod before moving it.

3-6 Attaching the Optional Microphone (U-ver.)

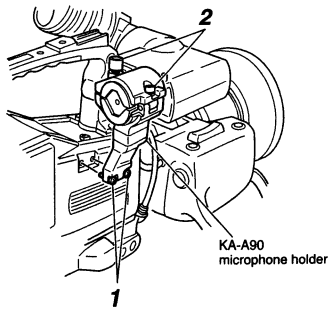

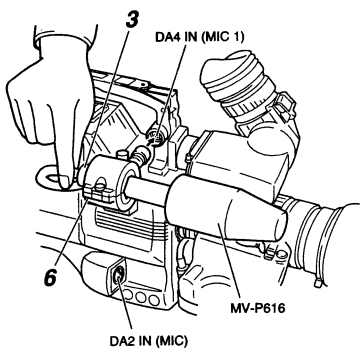

With the optional KA-A90 mic holder, the optional MV-P615/616 (mono) and MV-P612 (stereo/mono), microphones can be used.

* When using the MV-P612 microphone, set the DA4(MIC1) mode switch on the MV-P612 to "mono" (monaural).

1. Secure the mic holder with 2 screws.

2. Turn the small knob located on the outer side of the mic holder anticlockwise to loosen it, and loosen the large knob located on the inner side in the same way.
Rotate the large knob fully anticlockwise to open the holder.

3. Attach the microphone to the mic holder so that the microphone does not interfere with the cassette holder. With a stereo microphone, make sure that the left/right-sides are correct.

4. Set the mic holder so that the height is level, and tighten the inside and outside knobs to secure the microphone.

5. Connect the microphone cable to the mic input connector.
- When the MV-P616/MV-P612 is used, connect the microphone's 6-pin connector to the DA4 input connector of this unit.
- When the MV-P615 is used, connect the microphone's XLR 3-pin connector to the DA2 input connector of this unit. (Use only phantom microphone)
  When the microphone is connected to DA1 or DA3 input connector on the rear panel, set the MIC +48 V ON switch according to the microphone used.

6. Secure the microphone cable using the cable clamp located on the side of the mic holder.

Note:
- When the light mounted on the camera is used at the same time, if the microphone in use has a long sound collecting section (ultra-directional type, etc.), the microphone's shadow may influence the image.
- When using a KA-A70 mic holder, noise may interfere with the audio signal. In this case, use a KA-A90 mic holder instead.
- When using the MV-P612 in the stereo mode, or the broad-directional microphone, noise of this unit may be picked up.

3-6 Attaching the Optional Microphone (E-ver.)

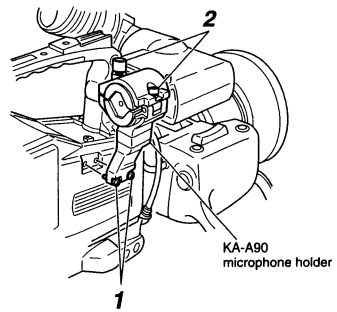

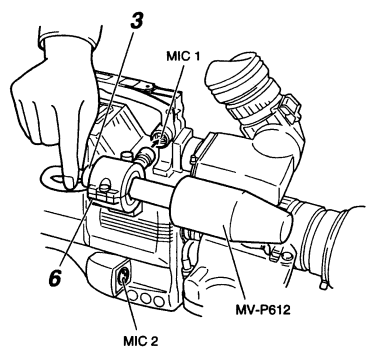

With the optional KA-A90 mic holder, the optional MV-P615/616 (mono) and MV-P612 (stereo), microphones can be used.

1. Secure the mic holder with 2 screws.

2. Turn the small knob located on the outer side of the mic holder anticlockwise to loosen it, and loosen the large knob located on the inner side in the same way.
Rotate the large knob fully anticlockwise to open the holder.

3. Attach the microphone to the mic holder so that the microphone does not interfere with the cassette holder. With a stereo microphone, make sure that the left/right-sides are correct.

4. Set the mic holder so that the height is level, and tighten the inside and outside knobs to secure the microphone.

5. Connect the microphone cable to the mic input connector.
- When the MV-P616/MV-P612 is used, connect the microphone's 6-pin connector to the MIC1 connector of this unit.
- When the MV-P615 is used, connect the microphone's XLR 3-pin connector to the MIC2 connector of this unit. (Use only phantom microphone)
  When the microphone is connected to AUD1 or AUD2 connector on the rear panel, set the MIC +48 V ON switch according to the microphone used.

6. Secure the microphone cable using the cable clamp located on the side of the mic holder.

Note:
When the light mounted on the camera is used at the same time, if the microphone in use has a long sound collecting section (ultra-directional type, etc.), the microphone's shadow may influence the image.

Note:
When using a KA-A70 mic holder, noise may interfere with the audio signal. In this case, use a KA-A90 mic holder instead.

3-7 How to Replace Backup Lithium Batteries

This unit uses a lithium battery to backup the time code and date/time data.
Install the provided lithium battery before actually using the unit. (Lithium battery : CR2032)

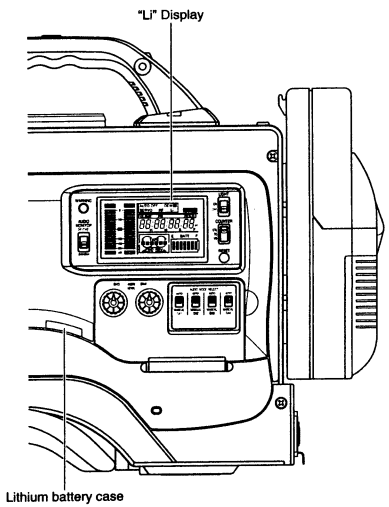

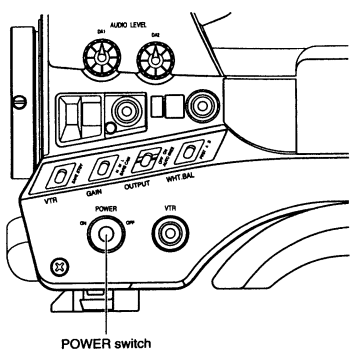

CAUTION

If the unit is not used for a lengthy period of time, remove the lithium battery. If the voltage of the lithium battery is low, the set may malfunction.

When the lithium battery is not in place or the battery is running down and requires a replacement, the "Li" in the LCD display will light up.

- Replace lithium batteries with the POWER switch set to ON. Doing it with the POWER switch set to OFF will cause the loss of backup data.

How to Install the Lithium Battery

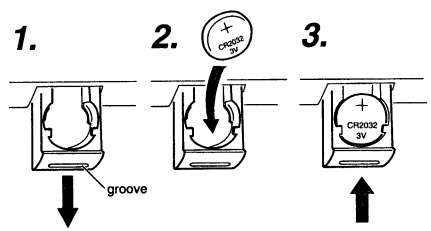

1. Place a flat-blade screwdriver in the groove of the lithium battery case and lower it.

2. Slide the battery into place with its + marked surface facing upward.

3. Push the lithium battery case back into the unit.

How to Remove Lithium Batteries

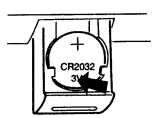

■ If you press the lithium battery at the shown place, it will easily be removed.

4. POWER SUPPLY (for U-ver.)

This unit is operable with the AC power supply or battery pack.

4-1 AC Operation

Note:
Do not remove or connect the DC cable while recording is being performed.

Use the JVC AA-G10 battery charger (max. rated output 4 A, 12 V DC) or AA-P250 battery charger (max. rated output 3.5A, 12.5 V DC) as the AC power supply.

- Do not use any power source with large fluctuations in the power source voltage as with ripples or other noise.

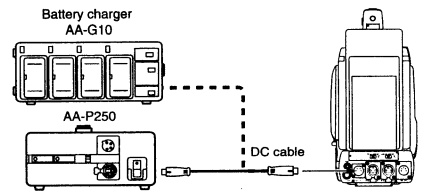

1. After making sure that the power switches of the DY-90 and of the AA-G10 or AA-P250 are set to OFF, connect the DC cable from the AA-G10 or AA-P250 to the DC INPUT connector of the DY-90 as shown in the illustration.

2.
- When the AA-P250 is used, set the CHARGE/CAMERA switch of the AA-P250 to CAMERA.
- When the AA-G10 is used, press the VTR button of the AA-G10.

3. Press the POWER switch of the unit to ON.
Now power is supplied to the unit.
- For details, read the instruction manual of the AA-G10 or AA-P250.

4-2 Battery Pack Operation

This unit can be operated with the following battery packs.

■JVC battery pack : NB-G1

■Flat shape type battery pack

■Anton-Bauer battery pack
- Propack 13/14 Series
- Trimpack 13/14 Series
- Magnum 13/14 Series
- Compack 13/14 Series

- An Anton-Bauer battery pack cannot be attached to this unit directly.
  An additional battery holder is required.
- Battery holder: Anton-Bauer model QRQ27
  See page 37 for the battery holder attaching method.

- When the DC cable is connected to the DC INPUT connector, the power supply from the battery pack is interrupted and the power starts to be supplied through the DC INPUT connector.
- The connection and disconnection of the DC cable should be performed quickly and correctly when operating with a battery pack.
  The following symptoms may occur when connecting and disconnecting the DC cable too slowly when operating with a battery pack.
  - The power is cut off for a moment when the DC cable is disconnected.
  - Noise to the video and audio signals occurs. Audio signal becomes mute.
- When operation is carried out with a new battery DC input after the previously battery capacity has run out, switch OFF the power once then switch ON after the DC voltage is applied.

4-2 Battery Pack Operation (Cont'd)

USING JVC'S NB-G1 OR FLAT SHAPE TYPE BATTERY PACK

Attaching the NB-G1 Battery Pack

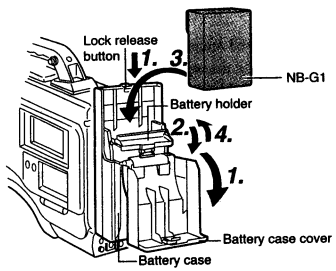

1. Open the battery case cover while pushing the lock release button.
2. Tilt the battery holder in the arrow-indicated direction.
3. Insert the battery pack into the battery case with its electrodes facing the unit.
4. Close the battery holder in the arrow-indicated direction and close the battery case cover.

Note:
Switch the power to OFF when replacing the battery pack.

Attaching a Flat Shape Type Battery Pack

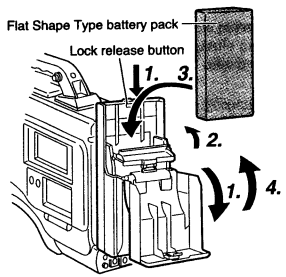

1. Open the battery case cover while pushing the lock release button.
2. Tilt the battery holder in the arrow-indicated direction.
3. Insert the battery pack into the battery case with its electrodes facing the unit.
4. Close the battery case cover.

4-2 Battery Pack Operation (Cont'd)

ATTACHING AN ANTON-BAUER BATTERY PACK

When an Anton-Bauer battery pack (Propack 13/14, Trimpack 13/14, Magnum 13/14, Compack 13/14 Series) is used, it is required to remove the battery case from this unit and attach the Anton-Bauer battery holder in place. Use the battery holder model described below.

- Battery holder : Anton-Bauer model QRQ27

Removing the Battery case from this unit and Attaching Anton-Bauer Battery Holder In Place

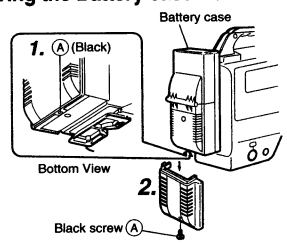

1. Remove the black screw Ⓐ from the bottom of the battery case.
2. Remove the lower half of the battery case cover in the downward direction.

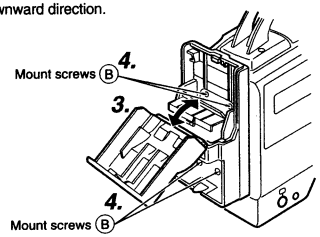

3. Open the battery cover and battery holder.
4. Remove the 4 mount screws Ⓑ, disconnect the connectors between this unit and the battery cover, and separate the battery case from this unit.

Attaching the Anton-Bauer battery holder

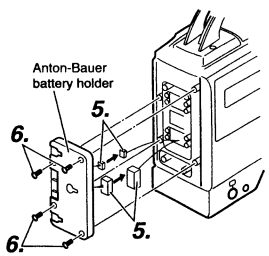

5. Connect the connectors from this unit and those of the battery holder (connect 2 pairs of connectors including the large and small ones).
6. Secure the battery holder onto this unit using the 4 mount screws supplied with the battery holder.

- Be careful not to pinch the connector wires; otherwise a malfunction may result.

USING AN ANTON-BAUER BATTERY PACK

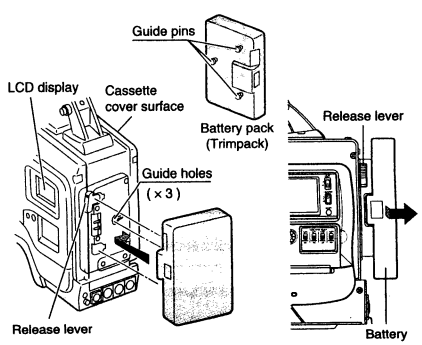

Attaching the Battery Pack

1. Align the 3 guide pins of the battery pack with the guide holes on the battery holder, and push straight to insert the battery pack. The battery cannot be attached properly if the guide pins are not inserted straight.
2. Slide the battery pack toward the side panel where the cassette cover is located until it clicks.
   → Now the battery pack has been attached.

Detaching the Battery Pack

■While pushing and holding the release lever, slide the battery pack toward the side panel where the LCD display is located, then pull the battery pack outward to remove.

4-2 Battery Pack Operation (Cont'd)

REMAINING BATTERY POWER DISPLAY

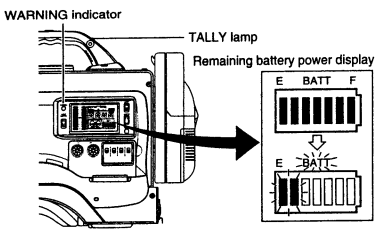

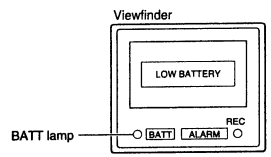

When an Anton-Bauer intelligent battery pack is used, the input voltage indicator section in the Status 1 mode of the viewfinder displays the remaining battery power in percentage (%) figures.

• To display the remaining battery power accurately, set the Setup Menu item "BATT. TYPE SELECT" according to the type of the battery pack in use. For details see page 64.

The status of the remaining battery power can be checked by the remaining battery power display. For details, see page 64.

■When the remaining battery power is nearly exhausted, the following warning message will appear. In this case, replace it with a fully-charged battery as soon as possible.
- Remaining battery power display :
  Segment bar and BATT indicator starts to blink
- WARNING indicator and TALLY lamp blink
- Viewfinder :
  BATT lamp blinks
  "LOW BATTERY" character indication (Status 0 or Status 1 mode)
- Alarm sound beeps

After the remaining battery power warning appears, if the battery power operation is still continued, this unit automatically stops operation.

Operating Time with Battery Pack

When the VF-P116 is used as the viewfinder and a fully charged battery pack is attached, the continuous operating time is as follows:

Battery Pack	Continuous Operating Time (at 25 °C)
NB-G1	40 Minutes
NP-1B	40 Minutes
Magnum 14	80 Minutes
Trimpack 14	50 Minutes

- Battery operating time may differ depending on the number of charging times of the battery, charging conditions and the operating environment, etc. Use the values in the table on the left for approximate reference times.
- Operating time is reduced in areas with a cold environment.
- Operating time is reduced when the powered zoom lens is used frequently.

PRECAUTIONS FOR THE BATTERY PACK

- When the battery pack is not in use, it must be stored in a cool, dry place.
  Do not leave the battery pack in a place where it might be subject to a high temperature (under direct sunlight in a car, etc.), this could cause leakage of the fluid or shorten service life.
- When the terminal section of the battery pack gets dirty, the operating time will be shortened.
- If the operating time becomes greatly reduced even immediately after recharging, the battery pack has nearly finished its service life. Purchase a new battery pack.

Recharging
- Recharge the battery pack after completely discharging. If recharging is repeated with incomplete discharging, this could cause lowering of the battery capacity.
- If the battery capacity is lowered by repeating incomplete recharging and discharging, once discharge the battery pack completely , then recharge it to regain the battery capacity.
- If the battery pack is recharged with its internal temperature raised immediately after use, recharging may not be performed completely.

4. POWER SUPPLY (for E-ver.)

This unit is operable with the AC power supply or battery pack.

4-1 AC Operation

Note:
Do not remove or connect the DC cable while recording is being performed.

Use the JVC AA-G10 battery charger (max. rated output 4 A, 12 V DC) or AA-P250 battery charger (max. rated output 3.5A, 12.5 V DC) as the AC power supply.

• Do not use any power source with large fluctuations in the power source voltage as with ripples or other noise.

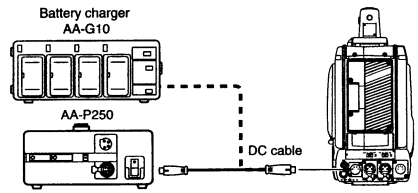

1. After making sure that the power switches of the DY-90 and of the AA-G10 or AA-P250 are set to OFF, connect the DC cable from the AA-G10 or AA-P250 to the DC INPUT connector of the DY-90 as shown in the illustration.
2. • When the AA-P250 is used, set the CHARGE/CAMERA switch to CAMERA.
   • When the AA-G10 is used, press the VTR button.
3. Press the POWER switch of the unit to ON.
   Now power is supplied to the unit.
   • For details, read the instruction manual of the AA-G10 or AA-P250.

4-2 Battery Pack Operation

This unit can be operated with the following battery packs.

■Anton-Bauer battery pack ..... Directly connect to the battery holder.
- Propack 13/14 Series
- Trimpack 13/14 Series
- Magnum 13/14 Series
- Compack 13/14 Series

■JVC battery pack : NB-G1
■Flat shape type battery pack

When the NB-G1 or a flat type battery pack is used, the optional battery case BH-P27 must be mounted to this unit. For details see page 36.

- When the DC cable is connected to the DC INPUT connector, the power supply from the battery pack is interrupted and the power starts to be supplied through the DC INPUT connector.
- The connection and disconnection of the DC cable should be performed quickly and correctly when operating with a battery pack.
  The following symptoms may occur when connecting and disconnecting the DC cable too slowly when operating with a battery pack.
  - The power is cut off for a moment when the DC cable is disconnected.
  - Noise to the video and audio signals occurs. Audio signal becomes mute.
- When operation is carried out with a new battery DC input after the previously battery capacity has run out, switch OFF the power once then switch ON after the DC voltage is applied.

USING AN ANTON-BAUER BATTERY PACK

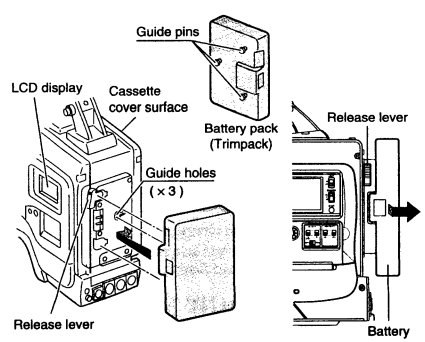

Attaching the Battery Pack

1. Align the 3 guide pins of the battery pack with the guide holes on the battery holder, and push straight to insert the battery pack. The battery cannot be attached properly if the guide pins are not inserted straight.
2. Slide the battery pack toward the side panel where the cassette cover is located until it clicks.
   → Now the battery pack has been attached.

Detaching the Battery Pack

■While pushing and holding the release lever, slide the battery pack toward the side panel where the LCD display is located, then pull the battery pack outward to remove.

4-2 Battery Pack Operation (Cont'd)

USING JVC's NB-G1 OR FLAT TYPE BATTERY PACK

When JVC's NB-G1 battery pack or flat type battery pack is used, it is required to remove the battery holder of the DY-90 and the optional battery case (BH-P27) must be mounted.

Removing the Battery Holder and Attaching the BH-P27 Battery Case (optional)

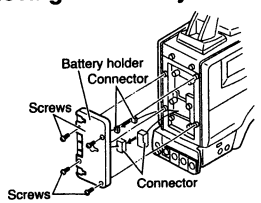

1. Remove the four screws fixing the battery holder and the two connectors (large, small) retaining the battery holder to this unit to remove the battery holder.

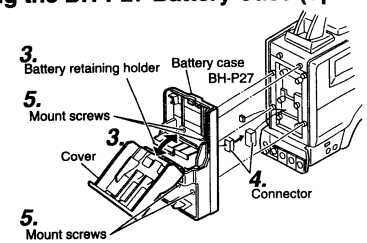

3. Open the battery case cover and the battery retaining holder.

4. Connect the battery case connector to the large connector of this unit.

5. Using the four fixing screws provided with the battery case, mount the battery case to this unit.

6. Secure the lower cover removed in step 2. using the black screw Ⓐ.

Attaching the BH-P27 battery case

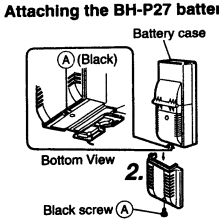

2. Remove the black screw Ⓐ on the bottom of the battery case, and remove the lower half of the battery case cover in the downward direction.

Attaching the NB-G1 Battery Pack

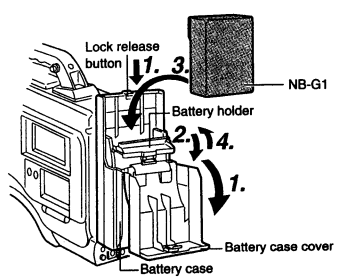

1. Open the battery case cover while pushing the lock release button.

2. Tilt the battery holder in the arrow-indicated direction.

3. Insert the battery pack into the battery case with its electrodes facing the unit.

4. Close the battery holder in the arrow-indicated direction and *close the battery case cover.*

Attaching a Flat Shape Type Battery Pack

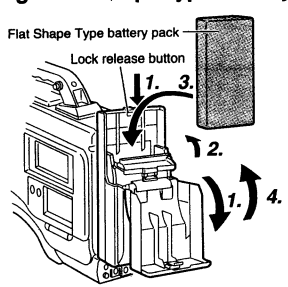

1. Open the battery case cover while pushing the lock release button.

2. Tilt the battery holder in the arrow-indicated direction.

3. Insert the battery pack into the battery case with its electrodes facing the unit.

4. Close the battery case cover.

4-2 Battery Pack Operation (Cont'd)

REMAINING BATTERY POWER DISPLAY

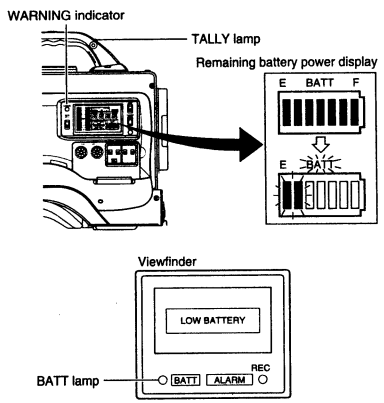

When an Anton-Bauer intelligent battery pack is used, the input voltage indicator section in the Status 1 mode of the viewfinder displays the remaining battery power in percentage (%) figures.

• To display the remaining battery power accurately, set the Setup Menu item "BATT. TYPE SELECT" according to the type of the battery pack in use. For details see page 64.

The status of the remaining battery power can be checked by the remaining battery power display. For details, see page 64.

■When the remaining battery power is nearly exhausted, the following warning message will appear. In this case, replace it with a fully-charged battery as soon as possible.

- Remaining battery power display :
  Segment bar and BATT indicator starts to blink
- WARNING indicator and TALLY lamp blink
- Viewfinder :
  BATT lamp blinks
  "LOW BATTERY" character indication (Status 0 or Status 1 mode)
- Alarm sound beeps

After the remaining battery power warning appears, if the battery power operation is still continued, this unit automatically stops operation.

Operating Time with Battery Pack

When the VF-P116 is used as the viewfinder and a fully charged battery pack is attached, the continuous operating time is as follows:

Battery Pack	Continuous Operating Time (at 25 °C)
Magnum 14	80 Minutes
Trimpack 14	50 Minutes
NB-G1	40 Minutes
NP-1B	40 Minutes

- Battery operating time may differ depending on the number of charging times of the battery, charging conditions and the operating environment, etc. Use the values in the table on the left for approximate reference times.
- Operating time is reduced in areas with a cold environment.
- Operating time is reduced when the powered zoom lens is used frequently.

PRECAUTIONS FOR THE BATTERY PACK

- When the battery pack is not in use, it must be stored in a cool, dry place.
  Do not leave the battery pack in a place where it might be subject to a high temperature (under direct sunlight in a car, etc.), this could cause leakage of the fluid or shorten service life.
- When the terminal section of the battery pack gets dirty, the operating time will be shortened.
- If the operating time becomes greatly reduced even immediately after recharging, the battery pack has nearly finished its service life. Purchase a new battery pack.

Recharging

- Recharge the battery pack after completely discharging. If recharging is repeated with incomplete discharging, this could cause lowering of the battery capacity.
- If the battery capacity is lowered by repeating incomplete recharging and discharging, once discharge the battery pack completely , then recharge it to regain the battery capacity.
- If the battery pack is recharged with its internal temperature raised immediately after use, recharging may not be performed completely.

5. PREPARATIONS

5-1 Turning the Power ON

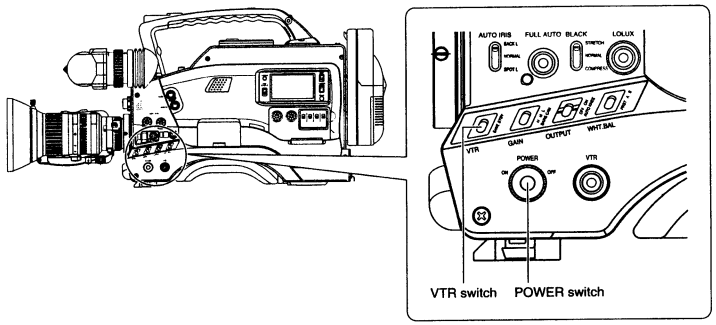

1. Turn the POWER switch to ON.
→The power is then supplied to the unit.
- Video image is output to the viewfinder.
- The display of the VCR section is turned on.

2. Select the DY-90 operation mode with the VTR switch.
- The DY-90 operation mode may differ when the power is turned ON or when the cassette is loaded depending on the setting of the VTR switch as follows:

VTR switch setting	DY-90 operation mode
SAVE	DY-90 enters the SAVE mode (tape protect mode) and stops the drum motor. "SAVE" is displayed in the VCR operation display section in the Status 1 mode of the viewfinder. In this mode, the tape is effectively protected. In this condition, press the VTR trigger button to start recording. However, the time required for this operation takes more than for that of the STBY mode.
STBY	When a recordable cassette tape is loaded, the DY-90 enters the record-pause mode automatically. (the Drum motor is still rotating.) "STBY" is displayed on the Status 1 screen on the viewfinder. In this condition, pressing the VTR trigger button immediately starts recording.

5-2 Cassette Loading and Unloading

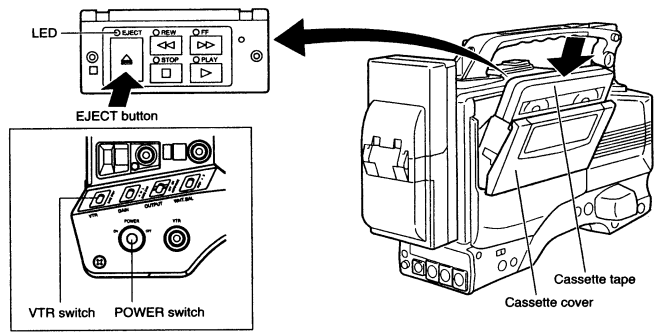

- A cassette cannot be loaded in or unloaded from the unit while it is in POWER OFF mode.
- Use a video cassette tape marked DIGITAL S.
- A S-VHS or VHS video cassette tape cannot be used with this unit. If you insert a S-VHS or VHS cassette in the unit, it will be ejected automatically

Loading the Cassette

1. Turn the POWER switch to ON.

2. Press the EJECT button to open the cassette cover.
The LED indicator above the EJECT button lights and the cassette cover opens.

3. Insert a cassette tape after removing the tape slack.

4. Slowly close the cassette cover by pushing it in all the way.
The tape is loaded automatically when the cassette cover is closed.

The cassette indicator on the display blinks during tape loading and lights steadily after the loading has been completed.

- The condition at the completion of loading is variable depending on the VTR switch and the REC switch on the back side of the cassette tape as shown below.

VTR switch	REC switch of Cassette Tape	
	ON	OFF
VTR STBY	Enters record-pause mode after back-spacing.	The unit enters stop mode.
SAVE	In the record-pause mode the drum rotation is stopped.	

- After the cassette cover is closed, it takes about 8 seconds before the unit can start recording or enter the stop mode.

CAUTION

When closing the cassette cover, be sure to push it in all the way. When the cassette cover is not closed completely, it is left in a half-locked state, in which the VCR section accepts no operation. In this case, push the cover again all the way to get it locked firmly. When the cassette is in place and the cassette cover is only half-locked, the cassette indicator in the LCD display will not appear. When the cassette cover is properly locked, the indicator is displayed.

Unloading the Cassette

1. Turn the POWER switch to ON.

2. Press the EJECT button.
→The LED indicator above the EJECT button lights and tape ejection starts.

The cassette indicator on the display blinks during tape ejection and turns off after the ejection has been completed.

- It takes a few seconds before the cassette cover opens after the EJECT button is pressed.
- The cassette tape cannot be ejected during recording. Allow the unit to enter the record-pause mode first before pressing the EJECT button.

3. Take out the cassette tape.

4. Close the cassette cover.

CAUTION

Do not leave the unit for a long period with the cassette cover open.
Otherwise dirt or other foreign objects may enter the VCR section, and cause malfunction.

6. SETTING AND ADJUSTMENTS BEFORE SHOOTING

6-1 Camera Control Settings for Adjustment

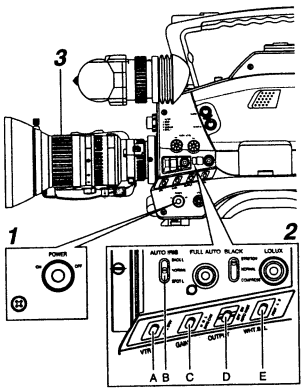

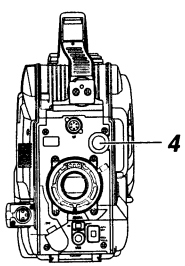

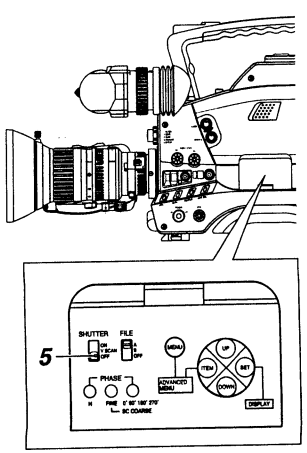

1. POWER ON

1. First place a charged battery in the battery holder or connect DC power to the DC input.
2. Turn the AC power adapter on.
3. Set the POWER switch on the unit to ON.

2. Side SWITCH positions

A. Turn the VTR switch to the SAVE.
B. AUTO IRIS switch; set to NORMAL.
C. GAIN switch; set to L. The L position is always 0 dB.
D. OUTPUT (CAM/BARS) switch; set to CAM•AUTO KNEE OFF.
E. WHT. BAL (Auto White Balance) switch; set to A or B.

3. AUTO IRIS ON

Initially set the lens iris to Automatic. (A mode)
Later take advantage of the Momentary Iris control to activate the camera's exposure system when needed.

4. FILTER turret

Choose the proper Filter selection for the lighting conditions.
•U-ver.

	FILTER	Suitable Location
1	3200K	Indoor, dark outdoors
2	5600K	Outdoors
3	5600K+ND	Outdoor under fine weather
4	EFFECT	The cross effect filter makes the highlight sections shine like crosses and reduces the contrast. The corresponding color temperature is 3200K.

•E-ver.

	FILTER	Suitable Location
1	3200K	Indoor, dark outdoors
2	5600K+1/4ND	Outdoors under fine weather
3	5600K	Outdoors
4	5600K+1/16ND	Outdoor under fine weather

5. SHUTTER positions

Set to OFF position.

6-2 Viewfinder Adjustment

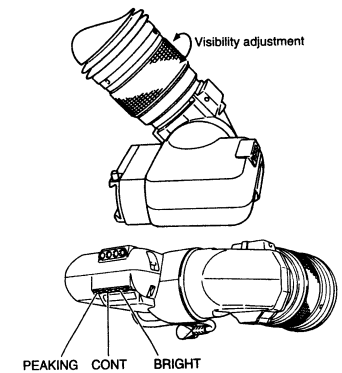

■ Visibility adjustment

Rotate the eyepiece focusing ring so that the viewfinder screen image is clearly visible.

■ Brightness and contrast adjustment

When the ambient brightness changes, the brightness and contrast of the viewfinder screen can be adjusted with the CONT and BRIGHT controls.

■ Peaking adjustment

Turning the PEAKING (contour adjustment) control makes the picture look sharper, making focus adjustment easier.

6-3 External Monitor Adjustment (U-ver.)

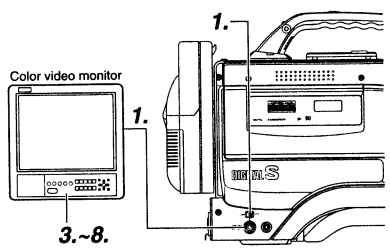

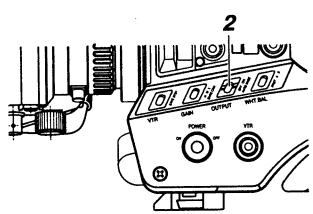

■ SMPTE type color bars

White ①	Yellow ②	Cyan ③	Green ④	Magenta ⑤	Red ⑥	Blue ⑦
Blue ⑧	Black ⑨	Magenta ⑩	Black ⑪	Cyan ⑫	Black ⑬	White ⑭
Blue ⑮	Blue ⑯	Blue ⑰			⑱ ⑲ ⑳	Blue ㉑

The color bar screen has a configuration as shown above.
The description hereinafter refers to the positions in the color bar screen using the numbers.

Display the color bar signal built in the camera head and adjust the colors, contrast and brightness.

1. Connect a color video monitor to the MONITOR OUTPUT connector of the camera head. Set the switch to the CAM side of the [CAM/VTR] switch of this unit.

2. Set the OUTPUT switch to BARS to output the color bar signal (SMPTE type color bars).

3. Set the monitor so that the screen turns entirely blue.

4. Adjust the chroma control of the monitor so that there is no difference in brightness between ① and ⑧ or between ⑦ and ⑭ of the color bars.

5. Adjust the phase control of the monitor so that there is no difference in brightness between ③ and ⑩ or between ⑤ and ⑫ of the color bars.

6. If the phase control adjustment above causes a difference in brightness between ① and ⑧ or between ⑦ and ⑭, restart from the chroma control adjustment in step *4*.

7. Switch the monitor back to the standard screen (All of R, G and B will appear).

8. Adjust the brightness by using the Brightness Adjusting control so that the color bar ⑱ and ⑲ disappear, and color bar ⑳ becomes visible.

6-2 Viewfinder Adjustment

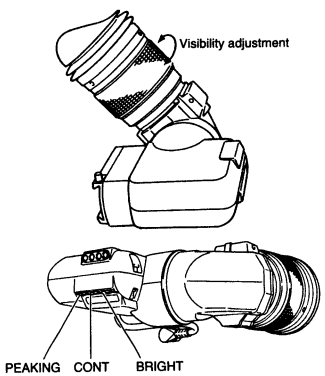

■ Visibility adjustment

Rotate the eyepiece focusing ring so that the viewfinder screen image is clearly visible.

■ Brightness and contrast adjustment

When the ambient brightness changes, the brightness and contrast of the viewfinder screen can be adjusted with the CONT and BRIGHT controls.

■ Peaking adjustment

Turning the PEAKING (contour adjustment) control makes the picture look sharper, making focus adjustment easier.

6-3 External Monitor Adjustment (E-ver.)

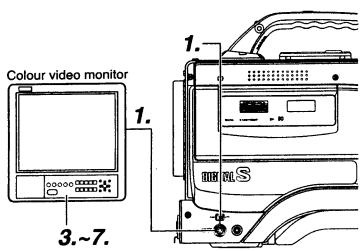

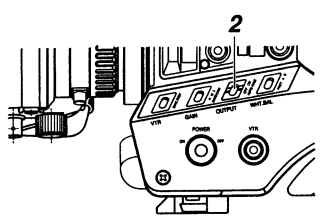

■ EBU type colour bars

White	Yellow	Cyan	Green	Magenta	Red	Blue	Black
①	②	③	④	⑤	⑥	⑦	⑧

The colour bar screen has a configuration as shown above.
The description hereinafter refers to the positions in the colour bar screen using the numbers.

Display the colour bar signal built in the camera head and adjust the colours, contrast and brightness.

1. Connect a colour video monitor to the MONITOR OUTPUT connector of the camera head. Set the switch to the CAM side of the [CAM/VTR] switch of this unit.

> **Note :**
> Make sure that the monitor is terminated with 75 Ω before connecting the MONITOR OUTPUT connector. If it is not terminated with 75 Ω the video signal will not output when the power is on because of the power saving features equipped with this unit.

2. Set the OUTPUT switch to COLOUR BARS to output the colour bar signal (EBU type colour bars).

3. Set the monitor so that the screen turns entirely blue.

4. Adjust the chroma control of the monitor so that there is no difference in brightness between ① and ⑦ of the colour bars.

5. Adjust the phase control of the monitor so that there is no difference in brightness between ③ and ⑤ of the colour bars.

6. If the phase control adjustment above causes a difference in brightness between ① and ⑦, restart from the chroma control adjustment in step *4*.

7. Switch the monitor back to the standard screen (All of R, G and B will appear).

6-4 Back Focus Adjustment

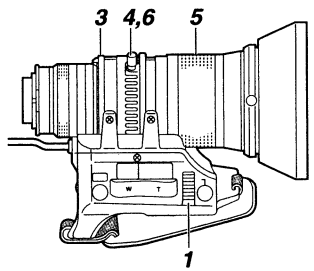

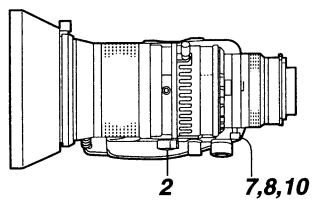

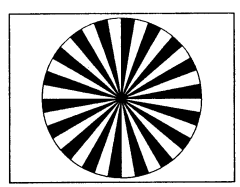

It is only necessary to perform this when focusing is not correct in both the Telephoto and Wide-angle positions, such as when the lens is attached for the first time.
Adjust the viewfinder for sharpness first.
It is easier to adjust back focus when the subject is more than 3 meters from the subject.

1. Set the Iris mode to M (Manual).

2. Set the Zoom mode to MANU (Manual).

3. Open the Iris ring to F1.4. If the illumination is too strong, reduce it or move to a darker place.

4. Turn the zoom lever until the lens is completely telephoto.

5. Focus on the subject. There is a specific chart that looks like a dart board which is helpful.

6. Set the lens to completely Wide-angle.

7. Loosen the back focus ring retaining knob.

8. Adjust the back focus ring for the best possible focus.

9. Repeat steps 4 through 8 for fine adjustment.

10. Tighten the back focus ring retaining knob to secure the ring.

6-5 White Balance Adjustment

Since the color of light (color temperature) is variable depending on the light source, it is required to re-adjust the while balance when the main light source illuminating the object changes.

Note

- Do not place any objects such as metal one, etc. that can produce a strong reflected light as this may cause an improper white balance adjustment.
- When an object lit by a halogen lamp of which the color temperature is 3,200K is shot while using a the color temperature conversion filter set to 5,600K, a proper white balance adjustment and (FAW) Full Time Auto White balance cannot be carried out. In this case, change the setting of the color temperature conversion filter to 3,200K then carry out the white balance adjustment and (FAW) again.

WHITE BALANCE ADJUSTMENT

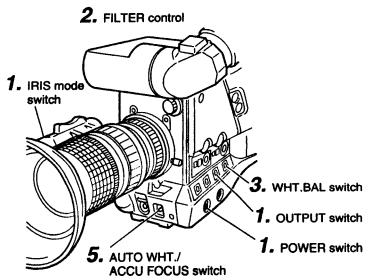

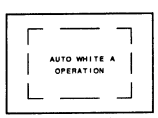

During operation

Result message

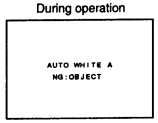

NG : OBJECT

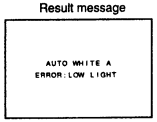

ERROR : LOW LIGHT

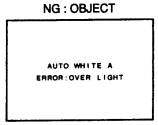

ERROR : OVER LIGHT

Two kinds of white balance adjustment results can be stored in memories A and B.

■ Adjustment procedure

1. Set the following switches.
   - Set the POWER switci to ON.
   - Set the OUTPUT switch to CAM-AUTO KNEE OFF.
   - Set the IRIS mode switch of the lens to A (Auto).
2. Set the FILTER control according to the current lighting.
3. Set the WHT.BAL switch to A or B.
4. Place a white object near the center of the screen under the same lighting conditions as the target object and zoom in to fill the screen with white.
5. Tilt the AUTO WHT./ACCU FOCUS switch upward (to AUTO WHITE) once and release it.
   - "AUTO WHITE A, B OPERATION" is displayed on the viewfinder screen during the operation of the auto white balance adjustment circuit.
   - "AUTO WHITE A, B OK" is displayed when the white balance has been adjusted properly.

[Error messages]

- NG : OBJECT
  Displayed when there is not enough white color on an object or the color temperature is not suitable.
- ERROR : LOW LIGHT
  Displayed when the light is low. Increase the lighting illuminationthen re-adjust the white balance.
- ERROR : OVER LIGHT
  Displayed when the light is excessively bright. Decrease the lighting illumination then re-adjust the white balance.

FULL-TIME AUTO WHITE BALANCE (FAW)

The FAW function adjusts the white balance value automatically as the lighting condition changes.
This mode is convenient when you have no time to adjust the white balance or when the camera is moved frequently in and out of places under different lighting conditions.

■ Setting procedure

The FAW function can be activated with item "FAW" on the ADVANCED MENU.
This item allows setting of the FAW function to one of the white balance switches, A, B or PRESET. Select "NONE" if the FAW function is not required.
See page 69.

CAUTION :

- The FAW (Full-time Auto White balance) function cannot provide optimum white balance with an object outside the FAW adjustment range, for example when it contains only a single color or not enough white color.
- The accuracy of the FAW (Full-time Auto White balance) is inferior to that of the manual white balance.
- When the power is switched ON in the FAW mode, it will take approximately 10 seconds for the FAW to complete automatic adjustment.
  Do not perform any recording during these few seconds.

6-6 Switch Settings of the VCR Section (U-ver.)

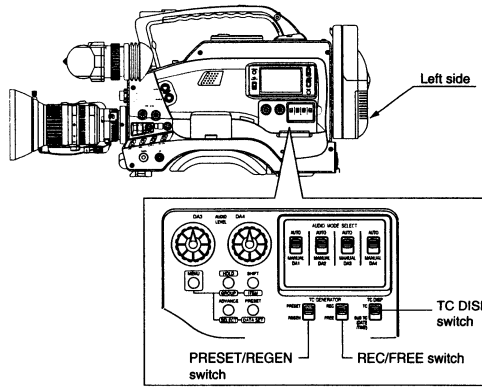

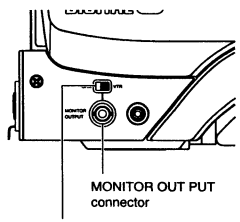

■ PCM Audio recording channel
The DY-90 records 4 channels of audio signals to the PCM audio channels.
According to the audio input connectors (DA1 - DA4 IN), it records to each PCM audio channel (DA1 - DA4). See page 46.

■ Audio input signal selection
Select with the [LINE/MIC] switch for the audio input when recording the audio signal of the [DA1 IN] or [DA3 IN] connectors on the rear panel. See page 46.

■ Recording level adjustment selection
Select the recording level adjustment "AUTO" or "MANUAL" for each audio input connector separately. (See page 47.)

■ Video output signal selection
Select the video signals from the viewfinder and monitor connector with the [CAM/VTR] switch.
CAM : Regardless of which mode, the EE image from the camera video signal is output.
Set to this position to shoot the image for back up use with the VCR connecting to the MONITOR OUTPUT connector.
VTR : The playback picture is output during the playback mode.
The EE image from the camera is output during other modes except PLAY mode. Set it to this position for ordinary use.

■ VCR setup menu setting

- AUDIO LOW CUT SELECT (DA1 TO DA4)
  Select whether the lower frequency components of the audio signal is attenuated or not for each audio input signal. Set to "ON" when eliminating the wind noise of the microphone.
- LONG PAUSE TIME SELECT
  Select the time (in minutes) until the DY-90 enters the tape protection mode (drum rotation stops) when the record-pause mode is continued for long time.
- BACK SPACE MODE SELECT
  Select an image to be viewed in the viewfinder or monitor during backspacing in the Record-pause mode. (Effective only when the [CAM/VTR] switch is set to "VTR".)

For details of setup menu, see page 64.

■ Setting the time code recording function
The unit records SMPTE-standard time code during recording. Set the switches in the TC GENERATOR block according to applications.

- To record a time code as set in the built-in time code generator:
  - Set the PRESET/REGEN switch to PRESET.
  - Set the REC/FREE switch.
    If it is required to record continual time codes across different scenes, set the switch to REC.
  - Set the VCR setup menu.
    Open the setup item "TCG SELECT DROP/NON-DROP" and set the framing mode of the time code generator to drop frame or non-drop frame mode.
- To record a time code in continuation from the existing time code on tape:
  - Set the PRESET/REGEN switch to REGEN.
- When recording the time code slave-locked to the external time code generator.
  - Set the PRESET/REGEN switch to PRESET.
  - Set the REC/FREE switch to FREE.
  - Setting the "U-BIT SLAVE ON/OFF" switch in the setup menu mode: Set to ON when the user's bit is also slave-locked at the same time.

The time taken to enter record mode from record-pause mode is variable depending on the PRESET/REGEN switch position.
When set to PRESET : Approx. 0.8 second
When set to REGEN : Approx. 1.5 second
This switching will causes a shift in the tape position for the REC PAUSE. Therefore, the unit generates a switching sound.
When the PRESET/REGEN switch is switched after having started recording by pressing the VTR trigger button of the camera, the new setting remains valid in subsequent recording operations.

For details on the time code operations including time code presetting, see "TIME CODE OPERATION" on page 55.

■ The sub-time code is used to record the date and time data.
For the setting of the date and time data, see page 61.

6-7 PCM audio recording channels for audio input signals (U-ver.)

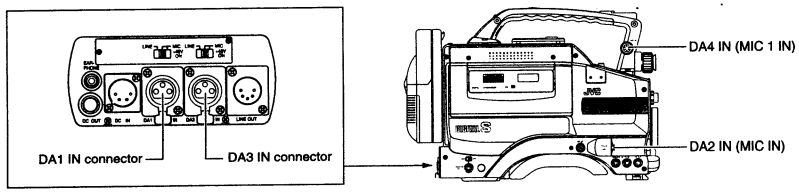

The DY-90 is equipped with 4 audio input connectors (DA1 IN - DA4 IN) to record 4 channels of audio signals.
As shown in the list below, the signals from each of the audio input connectors (DA1 IN - DA4 IN) are respectively recorded on each of the PCM audio channels (DA1 - DA4) of the tape.

PCM Audio Recording Channel			
DA1	DA2	DA3	DA4
DA1 IN Connector	DA2 IN (MIC IN) Connector	DA3 IN Connector	DA4 IN (MIC 1 IN) Connector

- The sound on the DA1/DA2 or DA3/DA4 channels is output during playback.(can be selected with the AUDIO MONITOR switch)
- The audio signals of the DA1 IN and DA2 IN connectors are only recorded on the linear track of the tape for audio search.

Note :

When the tape is in playback with the BR-D80U, BR-D40U or BR-D750U series, etc. which are not compatible with 4-channel audio signal output, the sound of the DA1 and DA2 channels only are output.

6-8 Audio Input Signal Selection (U-ver.)

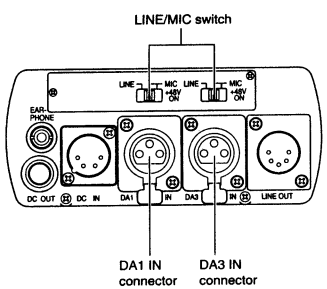

■ Selection of Rear Audio Input Connectors

Select the audio signal input to the AUDIO INPUT connector using the LINE/MIC switch. Set for DA1 IN and DA3 IN connectors separately.

LINE : Set to this position when connected to audio equipment, etc.
The reference input level is +4 dBs.

MIC : Set to this position when using the monaural microphone.
The reference input level is -60 dBs.

MIC +48 V : Set to this position when a microphone requiring +48 V DC power supply is connected. (Such as JVC MV-P615.)

■ DA4 (MIC 1) IN Connector

Connect a monaural microphone to the DA4 (MIC 1) IN connector.
When a stereo microphone is connected, the sound on the L channel only is recorded.

Compatible JVC microphones are:
- MV-P616 (Monaural)
- MV-P612 (Stereo/Monaural): Set the microphone mode switch to "Monaural".

6-9 Recording Level Adjustment (U-ver.)

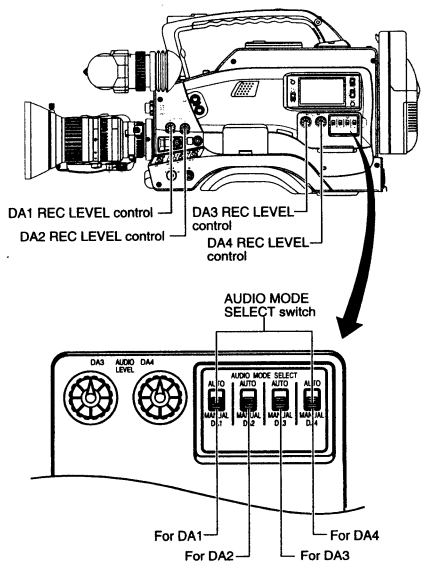

Either auto (fixed) or manual mode of the recording level adjustment can be selected for the audio signal at each audio input connector.
The recording level adjustment mode for each audio input connector DA1 - DA4 is selected with the AUDIO MODE SELECT switch.

■ Setting the AUDIO MODE SELECT Switch

AUTO : Recording level is fixed in this mode.
When the audio input exceeds the reference input level, the recording level is adjusted to the reference level.
However, even when the input level is lower than the reference input level, the recording level will not be increased.
The recording level volume cannot be controlled.

MANUAL : The recording level for DA1 - DA4 can be adjusted with the Rec. level control. (See below)

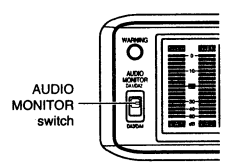

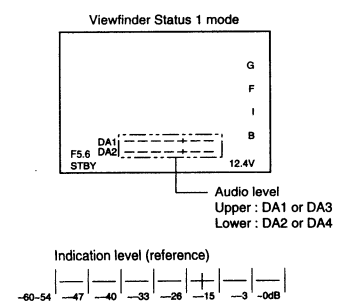

■ Manual Recording Level Adjustment

Recording level can be adjusted manually when the DY-90 is in the record, record-pause or stop mode.

1. Set the AUDIO MODE SELECT switch to "MANUAL" according to the input signal to be manually adjusted.
2. Select the audio level meter display mode for the display and viewfinder (DA1/DA2 or DA3/DA4 indication) using the AUDIO MONITOR switch.
3. Rotate the Rec level control corresponding to the required audio input. to be adjusted.
   - Adjust so that the peak level does not exceed the -3dB point when the loud sound is input.
   - With microphone input, since the limiter circuit is activated, the recording level does not exceed 0 dB even if the Rec level control is turned up.

Note :

When the DA1 or DA3 INPUT LINE/MIC switch on the rear panel is set to "MIC", be sure to check that the microphone is connected to the DA1 or DA3 INPUT connector. If the microphone is not connected, increasing the recording level could cause the noise from the input connector to be recorded on the tape. When the microphone is not connected to the DA1 or DA3 INPUT connector on the rear panel, set the LINE/MIC switch to "LINE" or lower the Rec level control.

6-6 Switch Settings of the VCR Section (E-ver.)

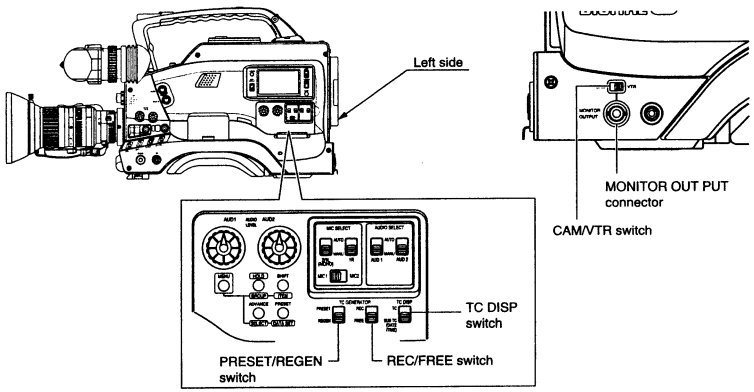

■ Audio input signal selection

Select the audio signal for the microphone connector on the front panel or the AUDIO INPUT connector on the rear panel with the AUDIO SELECT switches. (See : page 45.)

■ PCM audio channel distribution for audio input signal

Confirm the channel distribution of the audio input signal onto the four PCM audio channels (DA1 - DA4). (See page 46.)

■ Recording level adjustment selection

Select the recording level adjustment "AUTO" or "MANUAL" for each audio input connector separately. (See page 47.)

■ Video output signal selection

Select the video signals from the viewfinder and monitor connector with the [CAM/VTR] switch.

CAM : Regardless of which mode, the EE image from the camera video signal is output.
Set to this position to shoot the image for back up use with the VCR connecting to the MONITOR OUTPUT connector.

VTR : The playback picture is output during the playback mode.
The EE image from the camera is output during other modes except PLAY mode. Set it to this position for ordinary use.

■ VCR setup menu setting

- AUDIO LOW CUT FRONT/AUDIO LOW CUT REAR
  Select whether the lower frequency components of the audio signal is attenuated or not for each audio input signal.
  Set to this position when eliminating the wind noise of the microphone.
- LONG PAUSE TIME SELECT
  Select the time (in minutes) until the DY-90 enters the tape protection mode (drum rotation stops) when the record-pause mode is continued for long time.
- BACK SPACE MODE SELECT
  Select an image to be viewed in the viewfinder or monitor during backspacing in the Record-pause mode. (Effective only when the [CAM/VTR] switch is set to "VTR".)

For details of setup menu, see page 64.

■ Setting the time code recording function

The unit records EBU-standard time code during recording. Set the switches in the TC GENERATOR block according to applications.

- To record a time code as set in the built-in time code generator:
  - Set the PRESET/REGEN switch to PRESET.
  - Set the REC/FREE switch.
    If it is required to record continual time codes across different scenes, set the switch to REC.
- To record a time code in continuation from the existing time code on tape:
  - Set the PRESET/REGEN switch to REGEN.

- When recording the time code slave-locked to the external time code generator.
  - Set the PRESET/REGEN switch to PRESET.
  - Set the REC/FREE switch to FREE.
  - Setting the "U-BIT SLAVE ON/OFF" switch in the setup menu mode: Set to ON when the user's bit is also slave-locked at the same time.

The time taken to enter record mode from record-pause mode is variable depending on the PRESET/REGEN switch position.
When set to PRESET : Approx. 0.8 second
When set to REGEN : Approx. 1.5 second
This switching will causes a shift in the tape position for the REC PAUSE. Therefore, the unit generates a switching sound.
When the PRESET/REGEN switch is switched after having started recording by pressing the VTR trigger button of the camera, the new setting remains valid in subsequent recording operations.

For details on the time code operations including time code presetting, see "TIME CODE OPERATION" on page 55.

■ The sub-time code is used to record the date and time data.

For the setting of the date and time data, see page 61.

6-7 Audio Input Signal Selection (E-ver.)

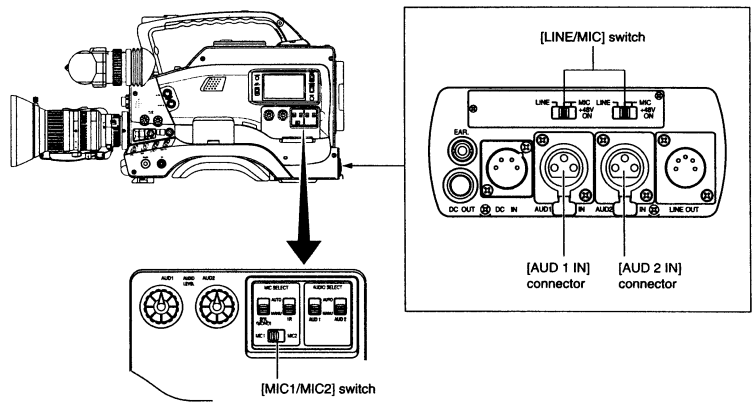

■ Selection of Front Microphone Connector

- Select the audio signal input among MIC 1 and MIC 2 connectors on the front panel using the [MIC1/MIC2] switch.
  MIC 1 : Inputs the audio signal from the microphone connected to the MIC 1 connector.
  MIC 2 : Input the audio signal from the microphone connected to MIC 2 connector.
- When the microphone of the MIC1 connector is used;
  Set the [FRONT MIC1 SELECT] of the SETUP MENU according to the microphone type (monaural or stereo) to be connected. (See page 62)

FRONT MIC 1 SELECT

no : Set to this position when using a monaural microphone.
st : Set to this position when using a stereo microphone.
* There is no need to set this menu switch when connecting a microphone to the MIC2 connector.

■ Selection of Rear Audio Input Connectors

Select the audio signal input to the AUDIO INPUT connector using the [LINE/MIC] switch. Set for AUD-1 and AUD-2 connectors separately.

LINE : Set to this position when connected to audio equipment, etc.
The reference input level is +4 dBs.

MIC : Set to this position when using the monaural microphone.
The reference input level is -60 dBs.

MIC +48 V : Set to this position when a microphone requiring +48 V DC power supply is connected. (Such as JVC MV-P615.)

Refer to page 46 for the Allocation of Audio Input signals Recorded onto the PCM Audio Channel.

6-8 PCM Audio Channel Allocation of Audio Input Signal (E-ver.)

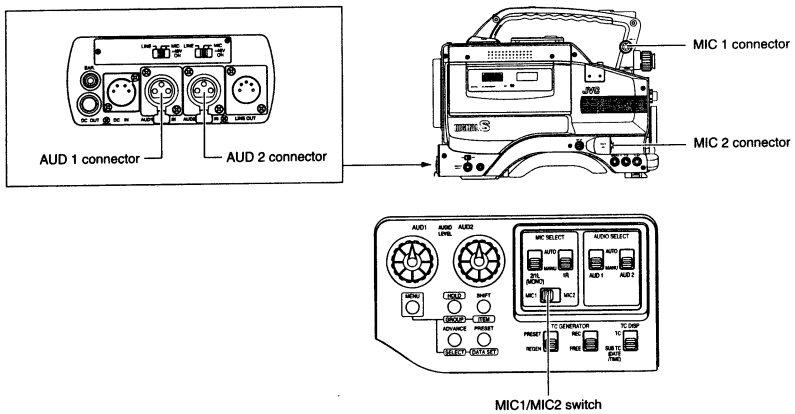

A total of four input connectors are provided for audio input.
To which PCM audio channel (DA1 to DA4) the audio signal to be recorded depends on the type of camera microphone connected to the MIC1 or MIC2 connectors which are on the front panel of the camera. Refer to the settings on the list below

- Set the [MIC1/MIC2] switch and [FRONT MIC1 SELECT] on the VCR SETUP MENU according to the type of camera microphone to be connected. Refer to page 64 on the VCR SETUP MENU.

Allocation of Audio Input Signals Recorded onto PCM Audio Channels

Microphone connector to be used and microphone type	Setting		PCM Audio channel			
	[MIC1/MIC2] switch	Menu	DA1	DA2	DA3	DA4
MIC 1 connector (6 Pin) Monaural microphone (MV-P616, etc.)	MIC 1	no (MONO)	AUD1	MIC1	AUD2	AUD2
MIC 1 connector (6 Pin) Stereo microphone (PV-P612, etc.)	MIC 1	St (STEREO)	AUD1	AUD2	MIC1L	MIC1R
MIC 2 connector (XLR, 3 Pin) Monaural microphone (PV-P615, etc.)	MIC 2	Not provided	AUD1	MIC2	AUD2	AUD2

- During playback the audio signal of the DA1/DA2 or the DA3/DA4 channel is output.
- The audio signals on the DA1 and DA2 channels are always recorded on the linear track of tape for audio search.

Note :
When the tape is in playback with a VCR (BR-D80E, BR-D40E or BR-D750E series, etc.) which is not compatible with 4 channel audio signal output, the sound of DA1 and DA2 only are output.

6-9 Recording Level Adjustment (E-ver.)

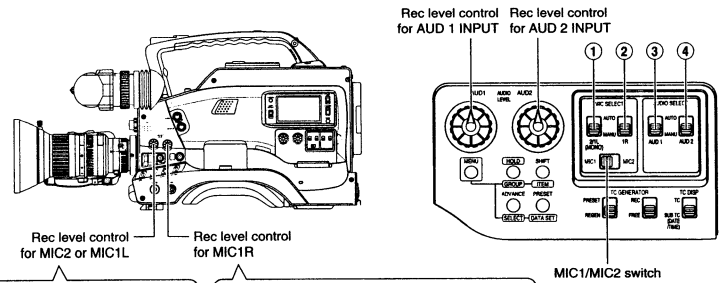

Rec level control
Adjusts the Rec level of the microphones of the following:
- Microphone of MIC 2 connector.
- Monaural microphone of MIC 1 connector.
- Stereo microphone L channel of MIC 1 connector.

Adjusts the Rec level of the microphone.
- Stereo microphone R channel of MIC 1 connector.

Select whether the recording level adjustment is set to Auto mode or Manual mode for each audio input connector using the AUTO/MANUAL select switches.

- When set to AUTO : Recording level is fixed. In this mode, the Rec level control does not function.
- When set to MANUAL : Recording level can be adjusted using the Rec level controls for each audio input.

Manual Recording Level Adjustment

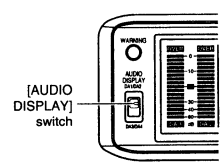

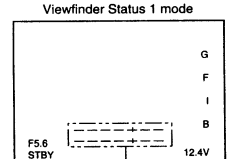

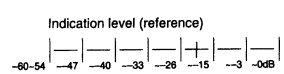

■ Recording level AUTO/MANUAL select switch

① Select switch for MIC2 or MIC1L
This function is available to the following microphones.
- Microphone of MIC2 connector.
- Monaural microphone of MIC1 connector.
- Stereo microphone L channel of MIC1 connector.

② Select switch for MIC1R
This function is available to the R-channel of the microphone of MIC1 connector.

③ Select switch for AUD 1 INPUT

④ Select switch for AUD 2 INPUT

Recording level can be adjusted manually when the DY-90 is in the record, record-pause or stop mode.

1. Set the AUTO/MANUAL switch to "MANUAL" according to the input signal to be manually adjusted.
2. Select the audio level meter display mode for the display and viewfinder (DA1/DA2 or DA3/DA4 indication) using the AUDIO DISPLAY switch.
3. Rotate the Rec level control corresponding to the required audio input. to be adjusted.
   - Adjust so that the peak level does not exceed the -3dB point when the loud sound is input.
   - With microphone input, since the limiter circuit is activated, the recording level does not exceed 0 dB even if the Rec level control is turned up.

Note :
When the AUDIO INPUT LINE/MIC switch on the rear panel is set to "MIC", be sure to check that the microphone is connected to the AUDIO INPUT connector. If the microphone is not connected, increasing the recording level could cause the noise from the input connector to be recorded on the tape. When the microphone is not connected to the AUDIO INPUT connector on the rear panel, set the LINE/MIC switch to "LINE" or lower the Rec level control.

6-10 Monitoring Audio During Recording

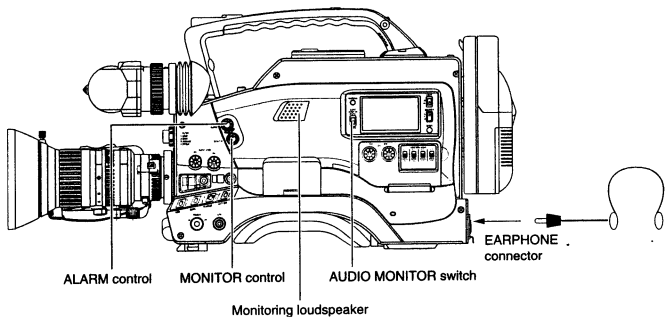

The audio input during recording, record-pause or stop mode can be monitored through the monitoring loudspeaker or earphone.

- The monitoring audio is not output from the loudspeaker while the EARPHONE jack is in use.
- Select the PCM audio channel to be monitored using the AUDIO MONITOR switch.
  DA1/DA2 : Outputs the audio signal input to the DA1 and DA2 PCM audio channels.
  DA3/DA4 : Outputs the audio signal input to the DA3 and DA4 PCM audio channels.
- The MONITOR control adjusts the monitoring volume.
- The loudspeaker or earphone outputs an alarm tone in the case of an abnormal condition occurring with the VCR section.
  An alarm tone is also output when the tape end is reached or when the battery is running down. The alarm tone volume can be adjusted with the ALARM control. For details on the alarm tone, see pages 81 and 82.

- Do not increase the audio monitoring volume too high, otherwise howling with the camera microphone may occur.

7. SHOOTING OPERATION

7-1 Basic Recording Operation

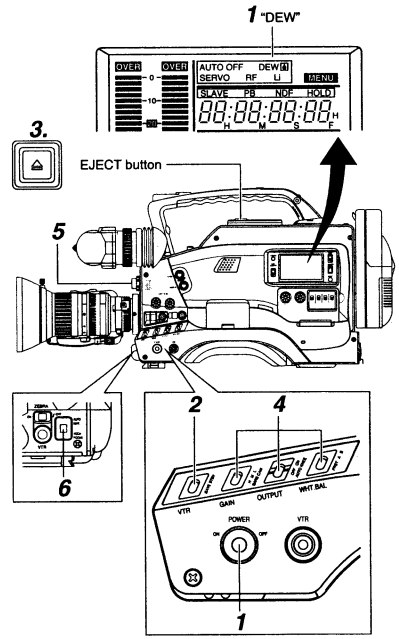

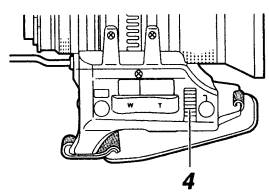

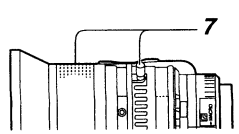

1. Turn the POWER switch to ON.
Power is then supplied to the unit.

Check that the condensation display "DEW" does not appear on the display. If it is lit, wait until the indicator goes out.

2. Set the VTR switch to the STBY position.

Even when the VTR switch is set to the "SAVE" position, pressing the VTR trigger button will start recording. However in this case, it is necessary to wait for a short time until the recording actually starts.
For SAVE mode, see page 51.

3. Press the EJECT button to open the cassette cover, insert a cassette tape properly and close the cassette cover gently.

- Ensure that the REC switch on the back side of the cassette is set to ON.
  When the cassette cover is closed, the tape is loaded and the unit enters record-pause mode.

- Use a cassette tape marked DIGITAL S. An S-VHS or a VHS cassette cannot be used with this VCR.
- After the cassette cover is closed, it takes about 10 seconds before the unit is ready for recording.

4. Set the switches as required.
OUTPUT : "CAM/AUTO KNEE OFF"
WHT-BAL : "A" or "B"
GAIN : Sensitivity suitable for the subject
Set the IRIS switch of lens to "A".

5. Select the FILTER according to the lighting condition.

- U-ver.

Position 1 (3200K)	: For shooting indoors or outdoors when illumination is not sufficient
Position 2 (5600K)	: For shooting outdoors
Position 3 (5600K + 1/16ND)	: For shooting outdoors on a sunny day.
Position 4 (EFECT)	: The cross effect filter makes the highlight sections shine like crosses and reduces the contrast. The corresponding color temperature is 3200K.

- E-ver.

Position 1 (3200K)	: For shooting indoors or outdoors when illumination is not sufficient
Position 2 (5600K + 1/4ND)	: For shooting outdoors on a sunny day
Position 3 (5600K)	: For shooting outdoors
Position 4 (5600K + 1/16ND)	: For shooting outdoors on a sunny day.

6. Adjust the white balance. (See page 44 for U-ver. 43 for E-ver..)

7. Point the camera at the subject and determine the angle of view and focus with the zoom lever and the focusing ring.

7-1 Basic Recording Operation (Cont'd)

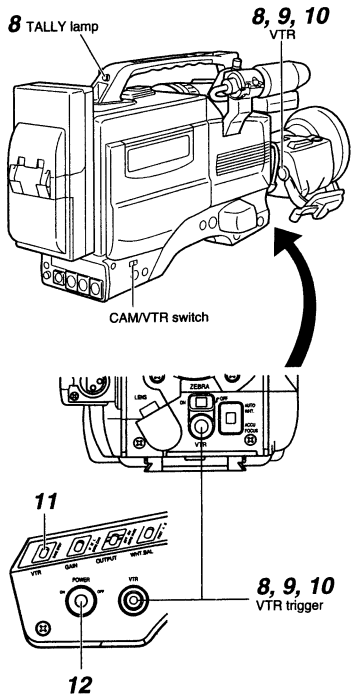

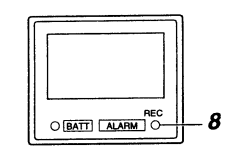

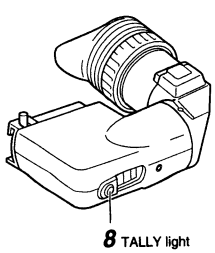

8. Press the VTR trigger on the unit or lens to start recording. Once recording has started, the tally lamps on the VCR section and the viewfinder tally light red, and the REC indication in the viewfinder lights green.

Note:
During time code generator use in the PRESET mode the sound trigger switch may be recorded when the VTR trigger on the lens is pressed.
To avoid this, use the VTR trigger located at the power switch side.

9. To stop recording, press the VTR trigger again. The unit enters the Record-Pause mode.

When the VTR trigger is pressed, the unit enters the record-pause mode after rewinding the tape for about 1 to 1.5 second (back-spacing).
During the back-spacing, the last section recorded on the tape is played in the reverse direction. However, during play in the reverse direction, block noise appears. You can use this as a reference for confirming whether recording has been made or not.
When the CAM/VTR switch is set to "VTR" and the setup menu item "BACK SPACE MODE SELECT" is set to "PB", the reverse playback image is output to the MONITOR OUTPUT connector and the viewfinder.

10. To restart recording:
Press the VTR trigger on the camera.

11. End recording.
Enter record-pause mode and perform the following operations as required.

■When it is required to unload the cassette tape :
- Press the EJECT button.

■When it is required to put the unit in save mode :
- Set the VTR switch to SAVE.
  Drum rotation stops and the DY-90 enters the tape protection/power-saving mode.

12. When shooting is completely finished, ejects the cassette and turn the power off.

Notes
- The STOP and EJECT buttons do not function during recording. These buttons function during the record-pause mode.
- The REC/ALARM indicator (green) in the viewfinder blinks until recording actually starts. This is not due to any defect of the unit, but indicates that the VCR is preparing for recording.
- If the VTR trigger button is pushed very quickly and repeatedly, the viewfinder record tally light may blink incorrectly and the DY-90 does not enter the record mode. To clear this condition, turn the POWER switch to OFF.
- A neat transition to the next recorded scene cannot be guaranteed if you end a recording by setting the POWER switch to OFF. Be sure to enter record-pause mode before switching the unit OFF.
- After operating in the record-pause mode, wait for two seconds or more before switching off the power.
  If the power is switched off immediately after the record-pause mode is initiated, it automatically starts searching the end of the last recorded section when the power is switched to ON again, this takes approximately ten seconds. During this operation, entry to the record mode is possible but recording cannot be carried out until the search is completed.
- Before recording a scene which is particularly important, perform test shooting to ensure that normal recording is possible.
- The power consumption can be reduced by setting the LIGHT switch on the display to OFF.

7-2 Save Mode

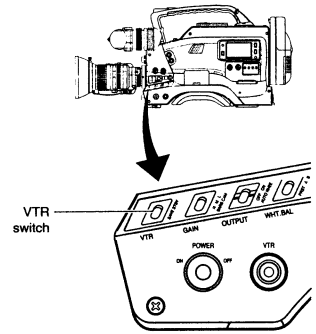

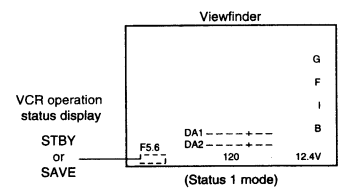

Figure shows U-ver.

When a recordable cassette tape is loaded, the DY-90 enters the record-pause mode. However the record-pause operation condition differs depending on the setting of the VTR switch.

- VTR switch setting
  STBY : The DY-90 enters the record-pause mode, and the drum is rotating at this time. (Standby mode)
  A "STBY" indication appears in the VCR operation mode display in the viewfinder. (Status 1 mode)
  • In this condition, pressing the VTR trigger button immediately starts recording.
  SAVE : The DY-90 enters the record-pause mode, however, the drum is not rotating. (SAVE mode).
  The tape is protected.
  A "SAVE" indication appears in the viewfinder during (Status 1 mode).

Recording from the Save mode

- In the save mode, pressing the VTR trigger button will start recording.
  However, in this case, there are several seconds of interval before the DY-90 starts recording.
- Pressing the VTR trigger button again stops recording and the DY-90 enters the save mode again.

7-3 If Unit is Left In Record-Pause (Standby) Mode

When the unit has remained in record-pause (standby) mode for about 30 minutes, the unit enters tape protect mode, in which the drum rotation is stopped automatically and the tape tension is released.

■To start recording from tape protect mode, press the VTR trigger button of the camera; the drum starts to rotate and recording starts in about 8 seconds.

■To return to record-pause mode from tape protect mode, press the VTR trigger button of the camera twice; the drum starts to rotate.

- The time until the unit enters the tape protect mode after it is put to record-pause mode can be set with the setup menu item "LONG PAUSE TIME SELECT" to 1 minute, 5 minutes or 30 minutes. (See page 64)

7-4 Checking Recorded Contents in Record-Pause Mode (Recording Check Function)

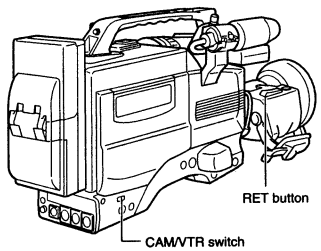

In the record-pause mode, the last recorded portion can be played back for approx. 2 seconds.

- The recorded contents can be checked with the viewfinder or the monitor connected to the MONITOR OUTPUT connector.

■Set the CAM/VTR switch to the "VTR" position beforehand.
- In the viewfinder or on the monitor connected to the MONITOR OUTPUT connector, the video image from the VCR section is output.

1. In the record-pause mode, press the RET button on the camera lens section.
- The tape is slightly rewound and played back for approx. 2 seconds.
  After playback is finished, the tape is returned to the position at which the RET button is pressed and the record-pause mode resumes.

■When the RET button is kept pressed, the tape is rewound and played pack for approx. 10 seconds at maximum.

* This function is available even when the DY-90 is in the save mode (VTR switch set to SAVE position).
After operation is finished, the DY-90 enters the save mode.

7-5 Cueing the Scene Change Point

When successive recordings are made, cue the scene change point before starting recording.

- After the tape is run
- When the cassette tape is ejected and loaded again
- When recording from the middle of the recorded tape

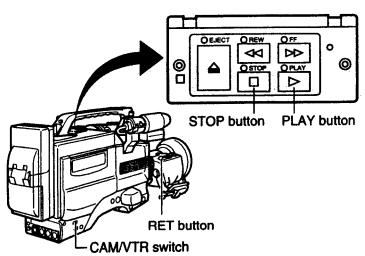

■To check the playback image with the viewfinder or monitor, set the CAM/VTR switch to the "VTR" position.

■Set the PRESET/REGEN switch to "REGEN" for continuous recording of the time code.

1. Press the STOP button to release the record-pause mode.

2. Press the PLAY button to start playback.

3. While watching the image on the viewfinder or on the monitor, press the STOP button at the point where you want to start recording.

4. Press the RET button on the camera lens section.
- Rewind the tape for playback of approx. 2 seconds, and search the scene change pilot signal while the tape is played back.

5. ■When the scene change pilot signal is detected, the DY-90 enters the record-pause mode from which the next recording is to be started.
■When the scene change pilot signal is not detected, the DY-90 enters the record-pause mode using the point as the scene change point at which the STOP button is pressed.

Notes :
- If the VTR trigger button is pressed in the middle of the automatic scene change cueing operation, the VTR trigger function is given priority so a neat transition to the next scene cannot be guaranteed.
- Be sure to use the VTR trigger button to end every recording (because a pilot signal for ensuring a neat transition to the next scene is recorded when this is done.)
- The proper functioning of the automatic scene change cueing cannot be guaranteed if the recording time before entering the record-pause mode is less than 2 seconds.

8. PLAYBACK MODE

8-1 Playback Procedure

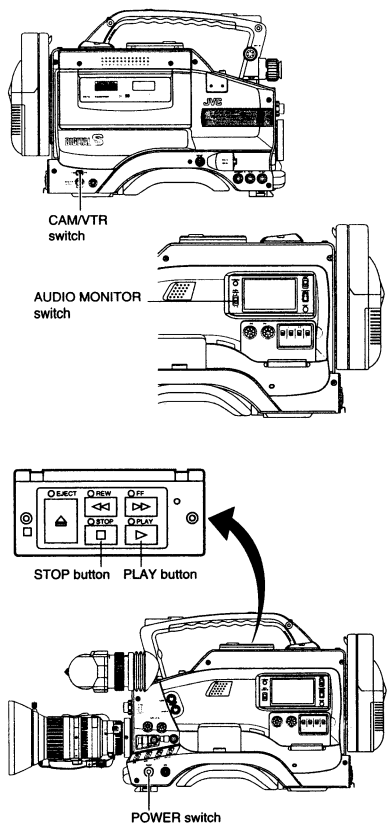

Setup

■Video output signal selection
- Set the CAM/VTR switch to the "VTR" position. In this mode, the viewfinder and MONITOR OUTPUT connector output the playback image of the VCR section.

■Audio output signal channel selection
During playback, the audio signal from the PCM audio channels is not output simultaneously. Two channels only are output during playback.
- Select the audio output channel using the AUDIO MONITOR switch.
  DA1/DA2 : Outputs the audio signal from the DA1 and DA2 channels.
  DA3/DA4 : Outputs the audio signal from the DA3 and DA4 channels.
  Audio output signals are output from the AUDIO OUTPUT connector (5-pin), monitor speaker and earphone jack.

Operation

1. Turn the POWER switch to ON.

2. Load the recorded cassette tape correctly.
■When a recordable cassette tape (with REC switch on the back of the cassette set to ON) is loaded, the VCR section enters the record-pause mode (STBY or SAVE mode).

3. Press the PLAY button.
→ The PLAY indicator lights and playback starts.

4. To stop playback, press the STOP button.
→ The STOP indicator lights and the VCR section enters the stop mode.

Notes:
- This unit is not capable of a manual tracking adjustment. The tracking is adjusted automatically during playback.
- When playing back the tape recorded with another VCR, digital noise may be generated.
- This unit is not capable of still image playback.
- An S-VHS or a VHS cassette tape cannot be used with this unit.
- When the automatic tracking function is activated at the start of the playback mode, digital noise may appear on the playback image.
- At the start of the playback mode, the audio signal from the linear tracks will be output. When the tape running is stabilized, the PCM audio signal is output.
  Only the DA1 and DA2 channel signals are recorded on the linear tracks. For this, even when the VCR section is in the DA3/DA4-channel output mode, only the DA1 and DA2 channel audio signals recorded on the linear tracks are output at the start of the playback mode.

8-2 Fast-Forward, Rewind

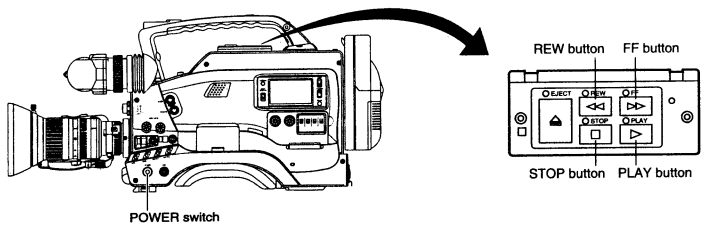

■Press the FF button in stop mode to fast forward tape and press the REW button in stop mode to rewind tape.

■In fast forwarding and rewinding, the EE image and EE audio signal are output.

■Press the STOP button to stop fast forwarding or rewinding.

- When the tape approaches the end during fast forwarding or rewinding, the tape speed decelerates to protect the tape.

8-3 Search

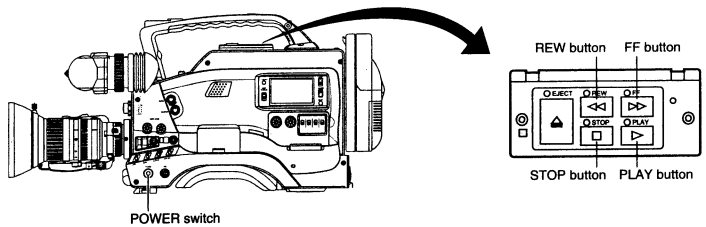

■Press the FF button in play mode to search the tape in the forward direction at about 2 to 6 times the normal speed. Press the REW button in play mode to search the tape in the reverse direction at about 1 to 6 times the normal speed.

■Press the PLAY button to resume normal playback.

Note:
When the mode is changed from search to play mode, characters are displayed for a moment on the viewfinder screen. This is not a malfunction.

- The audio recorded on the linear track of the tape is reproduced during the search.
- Regardless of the setting of the AUDIO MONITOR switch, the audio signals from DA1 and DA2 channels are output.
- Video noise may be observed or the image may become unstable during the search, but this is not a malfunction.

9. TIME CODE OPERATION

This unit records 2 time code areas on the tape; the main time code area which contains time codes for use as time data in editing, etc., and the sub-time code area which can optionally contain the date and time data.

- The main time code area contains the recording of SMPTE-standard time codes and user's bits. In play mode, the reproduced time codes or user's bits are shown on the counter display.
- The sub-time code area contains the recording of the date and time data, which can also be shown on the counter display during playback.

- Neither the main time code nor sub-time code data is output through the MONITOR OUTPUT connector.
- The generated time-codes are output from the TC OUT connector.

The following description begins with the handling method of the main time code. That of the sub-time code will be described from page 60.

9-1 Displaying Time Code

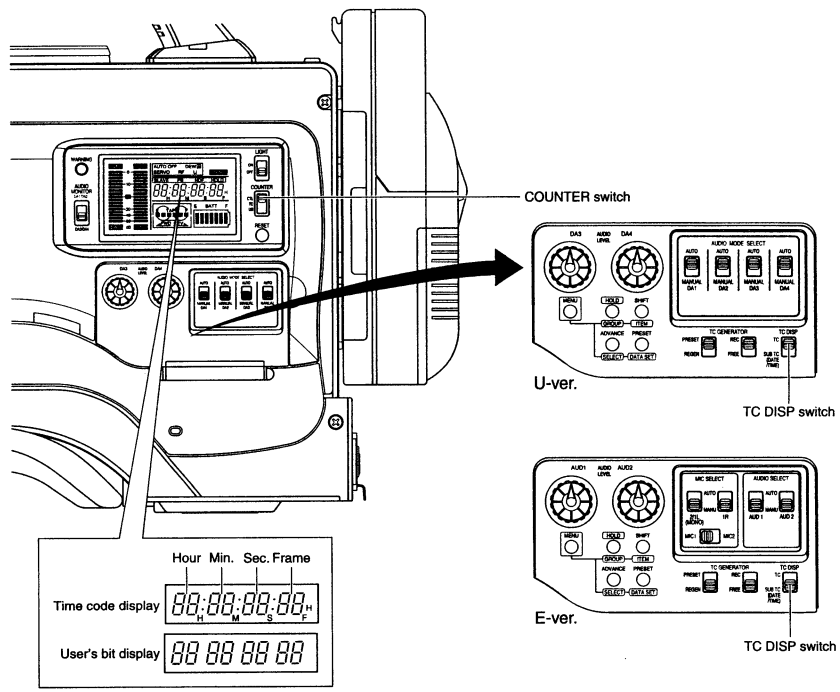

The selected time codes can be shown on the counter display during playback and recording as follows.

■Set the TC DISP switch to "TC".
If it is set to SUB TC, sub-time codes (date and time data) will be displayed.

■Set the COUNTER switch to "TC" or "UB".
TC : Time codes are displayed.
UB : User's bit data of time codes are displayed.

9-2 Presetting and Recording of Time Code

The time code or user's bit data to be recorded onto the tape can be preset to a desired value.

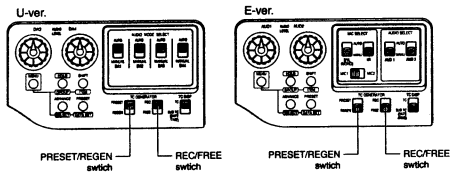

■Setting the switches in the TC GENERATOR block

- Set the PRESET/REGEN switch to PRESET.
- Set the REC/FREE switch as follows.

REC : The data preset in the time code generator runs only during recording. Use this setting to record continual time codes across scenes when recording them one after another.

FREE : The data starts to run from the moment it has been preset in the time code generator.

U-ver. only

Drop frame/Non-drop frame modes

With the NTSC format, the actual number of frames per second is about 29.97 frames, while the number of frames assumed for use in time code processing standard is 30 frames. The drop frame mode compensates for this difference by dropping frames 00 and 01 at every minute whose figure cannot be divided by 10. The non-drop frame mode ignores the above difference and does not drop frames.

■Setup menu setting

Select the framing mode of the time code generator with setup menu item "TCG SELECT DROP/NON-DROP".

dF : The time code generator runs in drop frame mode. Use this setting when putting importance on the recording time.

nF : The time code generator runs in non-drop frame mode. Use this setting when putting importance on the number of frames.

The NDF indicator on the LCD display lights in non-drop frame mode.

TIME CODE PRESETTING PROCEDURE

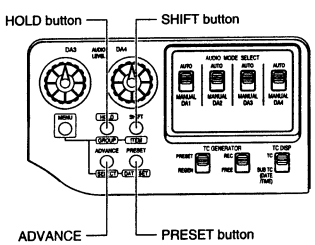

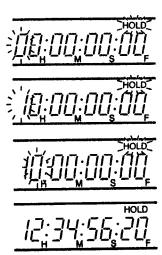

1. Display the time code on the counter display.
Set the COUNTER switch to TC.
- Time code up to 23 hrs. 59 min. 59 sec. 29 frames can be preset.

2. Put the time code generator in preset mode.
Press the HOLD button.
The HOLD indicator lights on the display to indicate the preset mode. The first digit of the counter display blinks.

3. Set the value of the blinking digit.
Press the ADVANCE button.
The value of the blinking digit changes.

4. Change the blinking digit.
Press the SHIFT button.
The blinking digit changes.

5. Set the desired value for all digits.
Repeat steps ***3*** and ***4*** for each digit.

6. Preset the set data in the memory.
Press the PRESET button.
The set data is saved as the time code generator value.
After the above operation, the HOLD indicator disappears from the display, the counter stops blinking and the time code is preset.
- If the REC/FREE switch is set to FREE, the time code starts to run.

If you preset a wrong time code, perform steps ***3***, ***4***, ***5*** and ***6*** again.

9-2 Presetting and Recording of Time Code (Cont'd)

PRESETTING USER'S BIT DATA

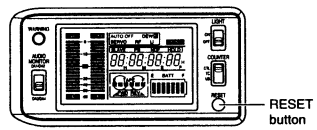

■Display user's bit data on the counter display and perform the same procedure as the time code presetting procedure.
- The user's bit can be specified using numerals or alphabets from 0 to F for each digit.

- Pressing the RESET button in preset mode resets the time code or user's bit data to 00 00 00 00.
- If you have pressed the HOLD button by mistake, press the HOLD button again to return to the previous display.

9-3 Recording Time Codes Continuously From Time Codes Recorded on Tape

The unit also incorporates a time code reader. Therefore, when the unit enters record mode from record-pause mode, it can read the time code data recorded on tape and record continual time codes after it. The recorded user's bit data is identical to the user's bit data recorded on tape.
To make this possible, set the switches in the TC GENERATOR block as follows before starting recording.

■Setting

U-ver.

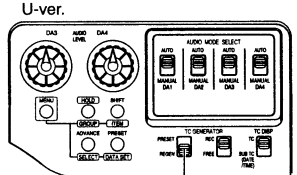

E-ver.

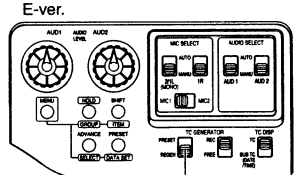

- Set the counter display to display time codes or user's bit data.
- Set the PRESET/REGEN switch to REGEN.
  The time code run mode becomes unrelated to the REC/FREE switch settings.
- The framing mode of the time code generator becomes automatically identical to the mode used by the time codes recorded on the tape (drop frame or non-drop frame mode).

When the PRESET/REGEN switch is set to REGEN, the time taken for entering record mode from record-pause mode becomes slightly longer.

9-4 Recording Time Codes by Slave-Locking the Built-in Time Code Generator with the External TCG

The built-in time code generator can be synchronized (slave-locked) with the SMPTE/EBU-standard LTC time code signal which is input through the TC IN connector. Once the slave locking has been carried out, the built-in time code generator runs even when the external time code input stops. Even when the power is switched off, it continues to run on the backup lithium battery.

Note :
When the power is switched ON while external sync signal is input, the screen moves in a vertical direction for a few seconds. This is not a malfunction.

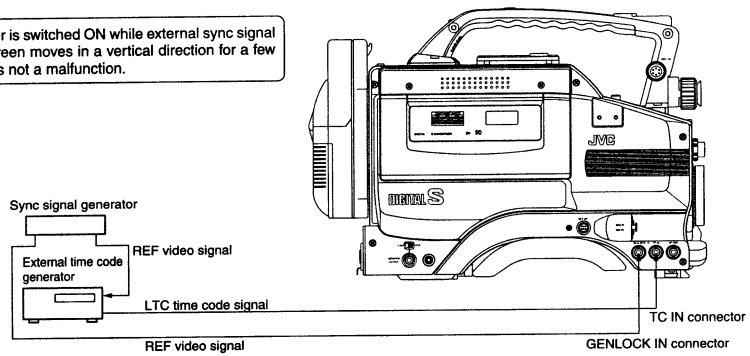

1. Input the reference video signal into the external time code generator and the GEN LOCK IN connector of this unit.

2. Display time code on the counter display.

3. Set the switches in the TC GENERATOR block as follows.
- Set the PRESET/REGEN switch to "PRESET".
- Set the REC/FREE switch to "FREE".

■ Setup menu setting
Set setup menu item "U-BIT SLAVE ON/OFF" as required.
- Set to "ON" if you want to also slave lock the user's bits to the external time code generator.

U-ver. only

The framing mode is set automatically to the same mode as the input time code (drop frame or non-drop frame mode). The NDF indicator lights on the display if the framing mode is the non-drop frame mode.

4. Set and operate the external time code generator.
→ The built-in time code generator is slave-locked with the input external time code data.
The SLAVE indicator lights on the display.

* If the external time code generator phase is not genlocked with the phase of the camera video signals, the "SLAVE" display will flicker.
- Once slave locking has been made, the built-in time code generator keeps on running even when the external time code generator is stopped.

Note :
- While the REC/FREE switch is set to "REC", slave-locking will not take place.
  Do not connect or disconnect slaves during recording as this may disturb the servo lock.

Multi-Camcorder Master-Slave Connection

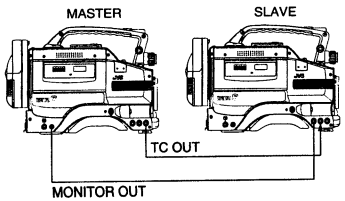

When there is only one slave DY-90, connect it as indicated in the figure left.
When connecting several DY-90s as slaves, input the REF video signal to GENLOCK IN connectors of all these units from the sync signal generator.

9-5 Reproducing Time Codes

The unit incorporates a time code reader which outputs the time codes and user's bit data recorded on the played tape is displayed on the counter display. The played time codes and user's bit data are not output from the TC OUT and MONITOR OUTPUT connector.

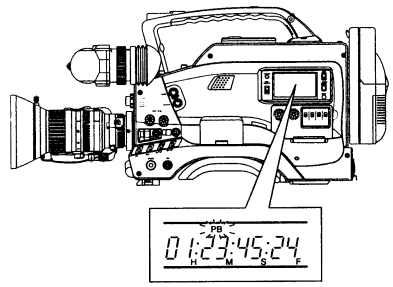

■ Set the counter display to display time codes or user's bit data.
■ Reproduce time codes.
Press the PLAY button.
→ The PB indicator lights on the display and the reproduced time code or user's bit data is displayed.

9-6 Sub-Time Code (Date, Time)

The unit records a sub-time code area as an additional time code recording area to the main time code area.
The sub-time code area contains data on the date and time of the day.

DISPLAYING SUB-TIME CODE

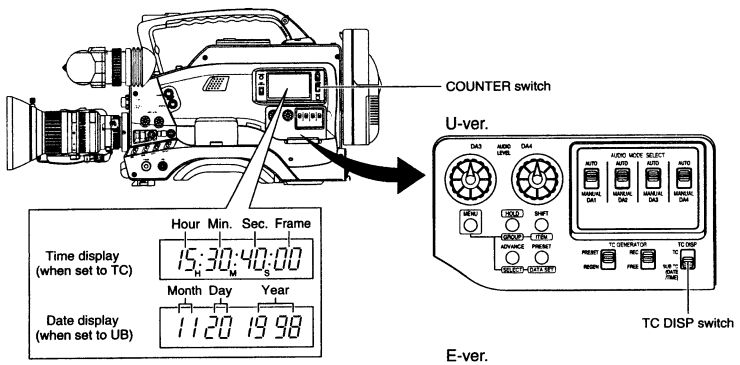

The date and time data based on the sub-time codes can be displayed during playback and recording.

■Set the TC DISP switch to "SUB TC".

■Set the COUNTER switch to "TC" or "UB".

When set to TC : Time data (hour, minute, second, frame) is displayed.

When set to UB : Date data (month, day, year) is displayed.

SETTING THE DATE AND TIME

The set date and time data is stored in the sub-time code area on tape.
The set date/time data will continue the counting on the backup lithium battery, even when the power is switched off.

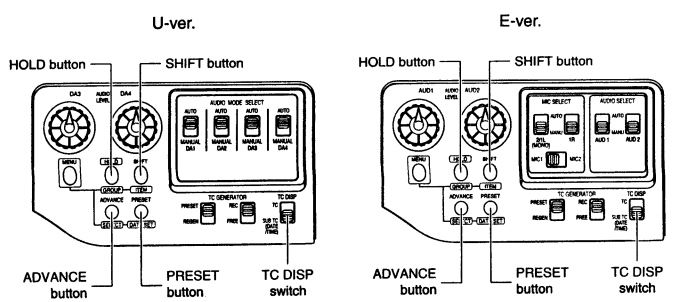

9-6 Sub-Time Code (Date, Time) (Cont'd)

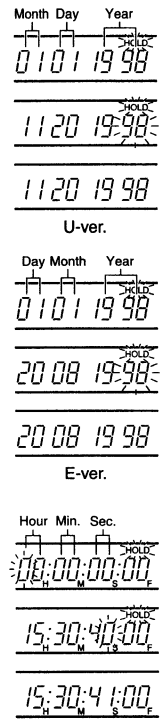

■ Setting the Date

1. Display the date on the counter display.
■ Set the TC DISP switch to SUB TC and the counter switch to UB.

2. Press the HOLD button to initiate the setting mode.
The HOLD indicator lights on the display, indicating that the VCR is in the setting mode.
The the first two digits of the counter display blinks.

3. Set the figures of the month.
• Press the ADVANCE button to set the figure of the blinking digit.

4. Similarly, set the figures of day and year by pressing the SHIFT button to change the blinking digit and pressing the ADVANCE button to set its figure.

5. Press the PRESET button to save the set date in the memory.
The HOLD indicator on the display turns off and the date display stops blinking.

■ Setting the Time of the Day

1. Display the time data on the counter display.
■ Set the TC DISP switch to SUB TC and the counter switch to TC.

2. Press the HOLD button to initiate the setting mode.
The HOLD indicator lights on the display, indicating that the VCR is in the setting mode.
The first digit of the counter display blinks.

3. Similarly to the date setting operation, set the figures of the hour, minute and second using the SHIFT and ADVANCE buttons.
• The hour should be set in the 24-hour mode.
• The frame cannot be set. It will be fixed to 00.

4. Press the PRESET button to save the set time in the memory.
The HOLD indicator on the display turns off and the time starts to count.

REPRODUCING THE DATE AND TIME

The recorded date and time data is not included in the video signal output from the VIDEO OUT connector or the time code signal output from the TC OUT connector.
The data is displayed only on the counter display of the VCR section during playback of the tape.

- When a tape recorded with this unit is played on a desk-top type DIGITAL S VCR (e.g. JVC BR-D50U/D51U/D80U/D85U, etc.), the date or time data is shown on the sub-time code display of the DIGITAL S VCR. The time data is displayed when the COUNTER switch of the DIGITAL S VCR is set to TC, and the date data is displayed if the switch is set to UB.

10. SETUP MENU

10-1 VCR Setup Menu

The setup menus for VCR section can be set by referring to its counter display.
The setup menu is not output to the MONITOR OUTPUT connector or viewfinder.
The set contents are stored in the memory and held even after the power is switched OFF.

VCR SETUP MENU CONFIGURATION

The setup menus are divided into 4 groups. Groups 1, 2 and 3 consist of display-only items such as the hour meter display, while Group 4 contains some items which can be set individually as required.

Setup menus		Display/Setting Contents
Group 1		Hour meter (Drum running time) display
Group 2		Remaining tape (hour:min.) display
Group 3		Battery voltage display
Group 4	Item	: Selection of time code generator framing mode (drop frame/non-drop frame) [U-ver. only]
	Item	: Selection of user's bit data during slave locking to time code (ON/OFF)
	Item	: Selection of battery type (12 V/13.2 V/14.4 V)
	Item	: Selection of long pause time (1 min./5 min./30 min.)
	Item	: Selection of audio signal low frequencies cut for rear DA1 input connector (OFF/ON)
	Item	: Selection of audio signal low frequencies cut for front DA2 (MIC) input connector (OFF/ON)
	Item	: Selection of audio signal low frequencies cut for rear DA3 input connector (OFF/ON)
	Item	: Selection of audio signal low frequencies cut for front DA4 (MIC 1) input connector (OFF/ON)
	Item	: Selection of image to be viewed in the Viewfinder or monitor during back spacing (PB/EE)

10-1 VCR Setup Menu (Cont'd)

DISPLAYING AND SETTING VCR SETUP MENUS

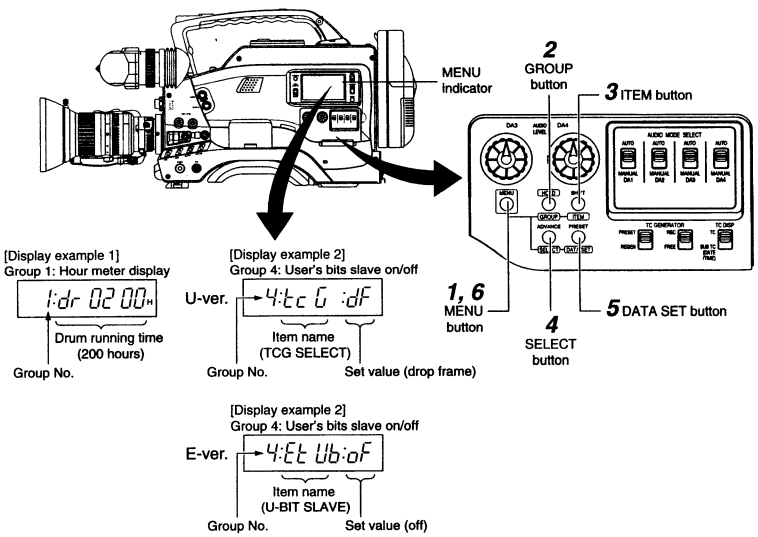

1. Enter setup menu mode.
Press the MENU button.
→ The MENU indicator lights on the display and the counter display shows the setup menu.

2. Select the group.
Press the GROUP button.
→ The group No. shown on the counter display changes.
• Each press of the GROUP button changes the displayed group No. from Group 1 Group 2 Group 3 Group 4 Group 1....

■ To exit from setup menu mode after simply confirming the display in Group 1, 2 or 3, press the MENU button now. The VCR section returns to normal mode.

■ Proceed to the following steps when you want to confirm or set the setup menus in Group 4.

3. Select a Group 4 item.
Press the ITEM button
→ The setup menu item shown on the counter display changes.

• Pressing the ITEM button when the Group 1, 2 or 3 display is shown does not change it.

4. Select the setting value of the selected setup menu item.
Press the SELECT button to select the setting value.
• Repeat steps 3 and 4 above for each of the items you want to set.

5. Save the setting value.
Press the DATA SET button.
→ "SAVE" is displayed on the counter and the setting value is saved in the VCR memory. The counter display returns to the setup menu display when data has been saved.

6. Quit setup menu mode.
Press the MENU button.
The VCR section returns to normal mode.

• If setup menu mode is quitted without saving the setting value changed with the SELECT button, "Abort" is displayed on the counter display for about 3 seconds.
To display the previously operated setup menu again, press the MENU button again while "Abort" is displayed.

10-1 VCR Setup Menu (Cont'd)

SETUP MENU CONTENTS

Group No.	Setup Menu Name		Counter Display	Contents
1	DRUM HOUR METER		1:dr 02 00H	• Shows the accumulated running time of the head drum. (200 hours in this example)
2	TAPE REMAIN		2:tr 00:30	• Shows the remaining tape time in "hours:mins.". (30 minutes)
3	BATTERY VOLTAGE		3:bt 12.5u	• Battery voltage in V. (12.5 V)
4	ITEM	TCG SELECT DROP/NON-DROP (U-ver. only)	4:tc 0 :dF ↕ nF	• Selects time code generator framing mode between drop frame and non-drop frame mode. dF : Built-in TCG runs in drop frame mode. Use this setting when recording time is important. nF : Built-in TCG runs in non-drop frame mode. Use this setting when frame count is important. • Factory setting: dF (Non-drop frame mode)
		U-BIT SLAVE ON/OFF	4:Et Ub:on ↕ oF	• Selects whether user's bit data is also slave-locked when the unit is slave-locked to an external TCG. on : Slave locked. oF : Not slave locked. • Factory setting: oF (Not slave locked)
		BATT.TYPE SELECT • If this setting is wrong, the remaining battery power display and the battery alarm will not function properly.	4:bA tt: 12 ↕ 13 ↕ 14	• Set according to the type of battery pack in use. 12 : 12 V (Set when using the NB-G1 or a 12VDC Flat Shape Type battery pack.) 13 : 13.2 V (Set when using Anton-Bauer Trimpack 13, Propack 13, Magnum 13 or Compack 13.) 14 : 14.4 V (Set when using Anton-Bauer Trimpack 14, Propack 14, Magnum 14 or Compack 14.) • Factory setting: 12 (12 V) • When powered through the DC input connector, the setting is fixed at 12 V.
		LONG PAUSE TIME SELECT	4:Ln CP:01 ↕ 05 ↕ 30	• Sets the time before the VCR section in record-pause or stop mode enters the tape protect mode (in which the drum stops rotation). 01 : 1 minute 05 : 5 minutes 30 : 30 minutes • Factory setting : 30 (30 minutes)
		DA1 LOW CUT SELECT	4:Lc A1:oF ↕ on	• Selects whether the low frequencies of the audio signal from the audio input connectors (DA1 to DA4) are cut or not. Set to ON when reducing the wind noise of the microphone. Each item should be set for each input connector. oF : OFF (without LOW CUT function) on : ON (with LOW CUT function) • Factory setting : oF
		DA2 LOW CUT SELECT	4:Lc A2:oF ↕ on	
		DA3 LOW CUT SELECT	4:Lc A3:oF ↕ on	
		DA4 LOW CUT SELECT	4:Lc A4:oF ↕ on	
		BACK SPACE MODE SELECT	4:bc SP:Pb ↕ EE	• Selects an image to be viewed in the viewfinder or monitor during backspacing in the Record/Pause mode. (Effective only when the CAM/VTR switch is set to VTR). Pb : Allows viewing of the last section recorded on the tape in reverse playback. It may result in some block noise. EE : Allows viewing of the image coming from the camera. • Factory Setting: Pb (PB)

10-2 Camera Section Setup Menu

In the camera section of this unit, there are two menu screens; MAIN MENU and ADVANCED MENU.

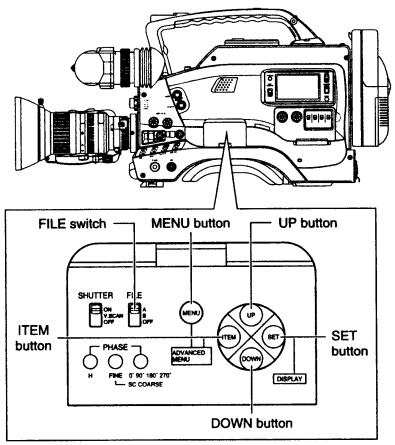

MAIN MENU

Includes convenient functions for use in recording, for example the detail enhancement function.

ADVANCED MENU

- OPERATION Used to change the factory-set values for the zebra pattern display, gain, etc.
- PROCESS Used to fine-adjust the gamma characteristic, etc, of the camera input signal.
- SCENE FILE Used to register the set values.

Either of these menu screens are displayed in the viewfinder. For operation, refer to the operation method of each menu screen.

■ MAIN

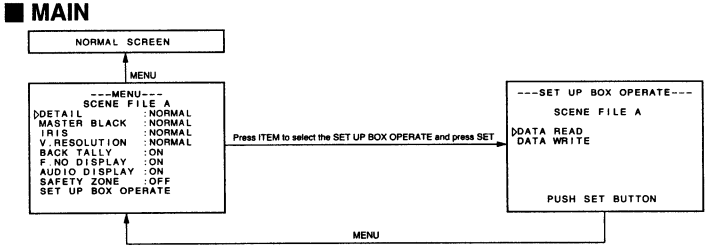

■ ADVANCED

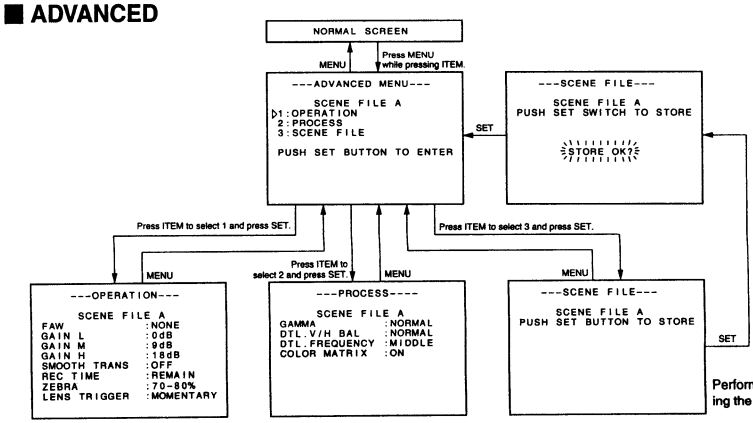

Perform this when registering the data of FILE A or B.

10-3 Camera Section MAIN MENU Screen

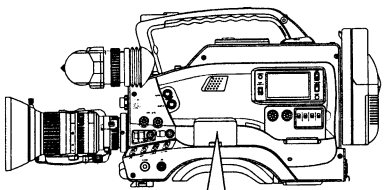

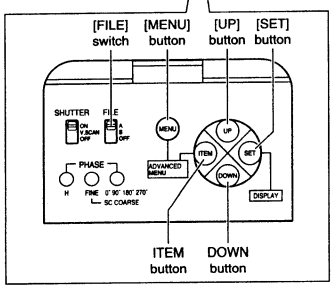

<Setup Procedure>

1. Using the FILE switch, select the required file to be set up.
2. On the normal screen, press the MENU button to display the MAIN MENU screen in the viewfinder.
3. Using the ITEM button, move the cursor (▷) to the required item to be set up.
4. Change the setting value using the UP or DOWN button.
5. Press the MENU button to resume the normal screen.
   At this time, the setting values are registered into the memory of DY-90. The set values are maintained even if the power is turned off.

Cursor

```
---MENU---
SCENE FILE A
▷DETAIL          :NORMAL
 MASTER BLACK    :NORMAL
 IRIS            :NORMAL
 V.RESOLUTION    :NORMAL
 BACK TALLY      :ON
 F.NO DISPLAY    :ON
 AUDIO DISPLAY   :ON
 SAFETY ZONE     :OFF
 SET UP BOX OPERATE
```

Item	Function, Operation	Variation Range	Initial Setting
DETAIL	Adjusts the detail enhancement level. • To sharpen details ..... Increase the number. • To soften details ..... Decrease the number.	MAX (9) 8 1 NORMAL (0) –1 –6 MIN (–7)	NORMAL
MASTER, BLACK	Adjusts the pedestal level (master black) which is the reference of black. • To increase the pedestal level ..... Increase the number. • To decrease the pedestal level ..... Decrease the number.	MAX (10) 9 1 NORMAL (0) –1 –9 MIN (–10)	NORMAL
IRIS	Changes the setting value of the detecting level in the auto iris mode. • PEAK ..... Detects the peak level of brightness • NORMAL ..... Detects normal level • AVG ..... Detects the average level of brightness	PEAK NORMAL AVG	NORMAL
V.RESOLUTION	Increases the vertical resolution. • NORMAL ..... Vertical resolution 380 lines (U-ver.) 450 lines (E-ver.). • V.PLUS ..... Vertical resolution 420 lines (U-ver.) 500 lines (E-ver.). Residual images may increase. • V.MAX ..... Vertical resolution 450 lines (U-ver.) 540 lines (E-ver.). The sensitivity is degraded and the bright section may be colored depending on the objects.	NORMAL V. PLUS V. MAX	NORMAL

10-3 Camera Section MAIN MENU Screen (Cont'd)

Item	Function, Operation	Variation Range	Initial Setting
BACK TALLY	Selects whether the BACK TALLY lamp on the handle section of this unit is activated or not. ON ..... BACK TALLY lamp lights in record mode. OFF ..... BACK TALLY lamp is not lit in record mode.	ON OFF	ON
F NO.DISPLAY	Selects whether the F number of the lens iris is displayed in the Status 1 screen or not. ON ..... F number is displayed. OFF ..... F number is not displayed.	ON OFF	ON
AUDIO DISPLAY	Selects whether the audio indicator is displayed in the Status 1 screen or not. ON: Audio indicator is displayed. OFF: Audio indicator is not displayed.	ON OFF	ON
SAFETY ZONE	Selects the safety zone setting. See "Safety Zone" on page 29.	OFF ZONE1 ZONE2 ZONE3	OFF
SET UP BOX OPERATE	Recalls the set up box operation screen. See "Set Up Box Operation" on page 78.		

10-4 Camera Section ADVANCED MENU Screen

In the ADVANCED MENU screen, there are two sub-menu screens ; **1 : OPERATION** (for operations) and **2 : PROCESS** (for video adjustments).
The values set in the ADVANCED MENU screen can be registered in the three types of memory areas — FILE A, FILE B and FILE OFF. When the values registered in FILE A and FILE B are stored in the memory of this unit with 3: SCENE FILE screen, they are maintained even when the power is turned OFF. The values registered in the FILE OFF are registered in the memory of the DY-90 when the ADVANCED MENU screen is resumed, therefore, they are also maintained when the power is turned off.

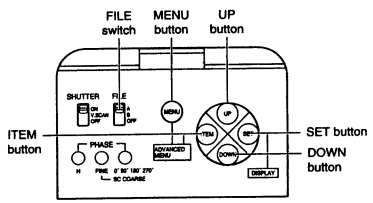

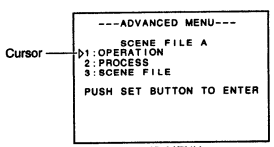

ADVANCED MENU screen

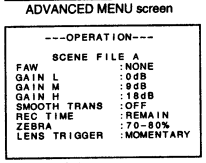

Select screen

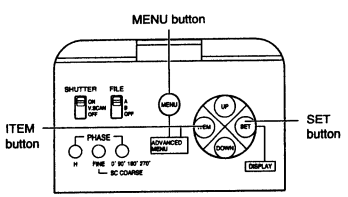

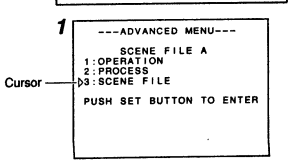

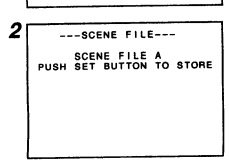

SCENE FILE screen

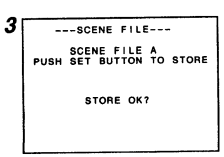

FILE A screen

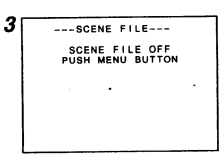

FILE OFF screen

<Setup Procedure>

1. Set the FILE switch to the file position to be set up. (FILE A, B, OFF)
2. In the normal screen, while pressing the ITEM button, press the MENU button to display the ADVANCED MENU screen in the viewfinder.
3. Press the ITEM button to move the cursor (▷) to the select screen (1 : OPERATION or 2 : PROCESS).
4. Press the SET button to display the select screen.
5. On the select screen, select the setting item using the ITEM button. (The selected item blinks.)
6. Using the UP or DOWN button, change the value of the selected item.
7. After the setting is finished, press the MENU button to return to the ADVANCED MENU screen.
   To register the setting values for FILE A or B, carry out the following procedure. The data in the FILE OFF is registered when the screen returns to the ADVANCED MENU.
   The registered data is maintained even if the power is turned off.

<Registration Procedure>

When the registration of FILE A or B is performed, since the setting value is stored in the memory of this unit, it is not cleared even when the power is turned OFF.
(Registration operation is not required for the data of FILE OFF.)

1. Press the ITEM button to move the cursor (▷) to the 3 : SCENE FILE item.
2. Press the SET button to display the SCENE FILE screen.
3. When the SET button is pressed in the SCENE FILE screen, "STORE OK?" is displayed.
   When the SET button is pressed again, the setting value is registered in the FILE and the ADVANCED SCREEN is restored.
   When the registration is not required, press the MENU button in the SCENE FILE screen to return to the ADVANCED SCREEN.
   If the FILE is set to OFF, "PUSH MENU BUTTON" is displayed.
4. When the MENU button is pressed, The Normal screen is resumed.

10-4 Camera Section ADVANCED MENU Screen (Cont'd)

OPERATION SCREEN

Item	Function, Operation	Variation Range	Initial Setting
FAW	Selects the position of the W.BAL switch ⑫ (on page 13) where the FAW (Full-Time Auto White Balance Adjustment) function is to be assigned. NONE ..... FAW function is not used. A ..... FAW is assigned to the A position. B ..... FAW is assigned to the B position. PRESET .... FAW is assigned to the PRESET position.	NONE A B PRESET See page 44(U-ver.), 43(E-ver.) for the FAW function.	NONE
GAIN L	Selects the gain value in the GAIN L position of the sensitivity select switch.	–3dB 0dB 6dB 9dB 12dB 18dB ALC (Auto gain level control) See page 76 for the ALC function.	0 dB
GAIN M	Selects the gain value in the GAIN M position of the sensitivity select switch.	–3dB 0dB 6dB 9dB 12dB 18dB ALC (Auto gain level control) See page 76 for the ALC function.	9 dB
GAIN H	Selects the gain value in the GAIN H position of the sensitivity select switch.	–3dB 0dB 6dB 9dB 12dB 18dB ALC (Auto gain level control) See page 76 for the ALC function.	18 dB
SMOOTH TRANS	Smoothens the transition when the GAIN switch ⑭ (on page 12), or W.BAL switch ⑫ (on page 13) is switched over and achieves gradual change in place of sudden change. ON ..... Activates the smooth transition function. OFF ..... Deactivates the smooth transition function. The SMOOTH TRANS function is defeated during switching of the LoLux and FAS buttons as well as during switching of the GAIN switch which is assigned to ALC.	ON OFF	OFF
REC TIME	Sets either the remaining tape recording time or TIME CODE to be displayed on the viewfinder screen. TIME CODE ..... TIME CODE is displayed. REMAIN ..... Remaining time is displayed.	TIME CODE REMAIN	REMAIN

10-4 Camera Section ADVANCED MENU Screen (Cont'd)

Item	Function, Operation	Variation Range	Initial Setting
ZEBRA	Switches the brightness level of the object section where the zebra pattern is displayed. 70-80% ..... Zebra pattern is displayed in sections with brightness levels between 70% and 80%. 85-95% ..... Zebra pattern is displayed in sections with brightness levels between 85% and 90%. OVER 95% ..... Zebra pattern is displayed in sections with brightness levels over 95%. OVER 100% ..... Zebra pattern is displayed in sections with brightness levels over 100%.	70 – 80%, 85 – 95% OVER 95% OVER100%	70 – 80%
LENS TRIGGER	Changes the lens trigger setting according to the lens in use. MOMENTARY ..... Compatible with momentary (non-lock type) triggering. Mainly used with lenses using the 12-pin connector. ALTERNATE ..... Compatible with alternate (lock type) triggering. Mainly used with lenses using the 8-pin connector.	MOMENTARY ALTERNATE	MOMENTARY

PROCESS SCREEN

1. The set values can be changed with the UP or DOWN button.
2. After setting, press the MENU button to return to the ADVANCE MENU screen.
3. In case to register the set value in the FILE A or FILE B, select "3 SCENE FILE" with the ITEM button and press the SET button.

Item	Function, Operation	Variation Range	Initial Setting
GAMMA	Correction of the gamma curve to decide the replay ability of black color. • To enhance the black color replayed, however, halftones will be lost for white section ..... Increase the number (UP) • To attenuate the black color replayed ..... Decrease the number (DOWN) **Note :** • During the LOLUX operation, " FIX" is displayed because GAMMA is fixed at the MIN value. • When GAIN is set to 18 dB, "FIX" is displayed because GAMMA is fixed at the MIN value.	MAX 7 18 step to (including OFF) NORMAL to –7 MIN OFF	NORMAL
DTL. V/H BAL	Sets the direction, horizontal (H) or vertical (V), in which stronger detail enhancement is applied. • To strengthen the H enhancement ..... Increase the number (UP). • To strengthen the V enhancement ..... Decrease the number (DOWN).	H-MAX (4) 3 to 9 step NORMAL to –3 H-MIN (–4)	NORMAL
DTL. FREQUENCY	Varies the detail enhancement level by changing the contour frequency emphasis. The setting depends on the subject: • HIGH ..... Applies strong detail enhancement emphasis. Used to shoot subjects with fine patterns. • MIDDLE ... Applies medium detail enhancement emphasis. • LOW ..... Applies weak detail enhancement emphasis. Used to shoot subjects with large patterns. **Note :** • The DTL. FREQUENCY cannot be set when the GAIN of the ADVANCED MENU is set at 18 dB.	HIGH MIDDLE LOW	LOW

10-4 Camera Section ADVANCED MENU Screen (Cont'd)

Item	Function, Operation	Variation Range	Initial Setting
COLOR MATRIX	Sets the color matrix • ON ..... The color replayed is enhanced, but noise increases. • OFF ..... Deactivates the color matrix function **Note :** • When the GAIN value exceeds +15 dB, the color matrix does not function even in the ON position. • During the LOLUX operation, COLOR MATRIX is fixed to the OFF setting and " FIX " is displayed.	ON OFF	ON

10-5 Resetting Setup Data

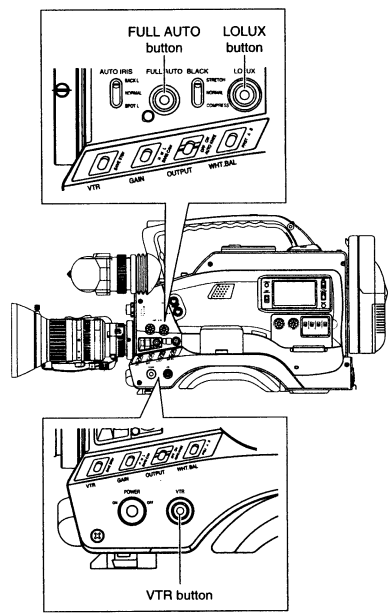

Resetting the FILE data

Data registered in the FILE A or FILE B areas can be cleared to restore the initial setting value.

<How to reset FILE A>
While pressing the **FULL AUTO** button, turn the power ON.

<How to reset FILE B>
While pressing the **LOLUX** button, turn the power ON.

<How to reset FILE OFF>
While pressing the **VTR** button, turn the power ON.

10-5 Resetting Setup Data (Cont'd)

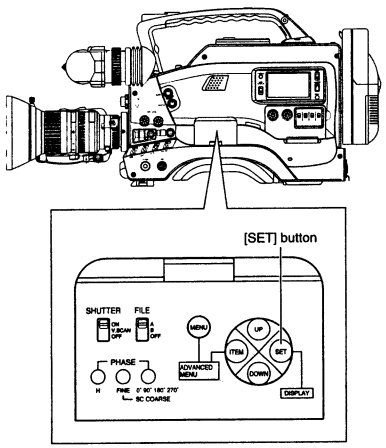

System Reset

Data registered for all setting items can be cleared to restore the initial setting values.

Note:

The mechanical switch positions and auto white balance memory are not cleared.

How to reset the system

While pressing the SET button, turn the power ON.

System Reset Items and Initial Setting Values

Item	Initial Setting Value
SHUTTER	1/100 (U-ver.), 1/120 (E-ver.)
V.SCAN	1/100.2 (U-ver.), 1/120.1 (E-ver.)
STATUS SCREEN	STATUS 0
LOLUX	OFF
FULL AUTO	OFF
DETAIL	NORMAL
MASTER BLACK	NORMAL
IRIS	NORMAL
V.RESOLUTION	NORMAL
BACK TALLY	ON
F.NO DISPLAY ON	
AUDIO DISPLAY	ON
SAFETY ZONE OFF	

Item		Initial Setting Value
SCENE FILE	FAW	NONE
	GAIN L	0dB
	GAIN M	9dB
	GAIN H	18dB
	SMOOTH TRANS	OFF
	REC TIME	RENAIN
	ZEBRA	70-80%
	LENS TRIGGER	MOMENTARY
	GAMMA	NORMAL
	DTL.V/H BAL	NORMAL
	DTL.FREQUENCY	LOW
	COLOR MATRIX	ON

11. FEATURES OF THE CAMERA SECTION

11-1 Full-Time Auto White Balance (FAW)

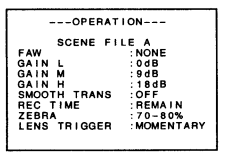

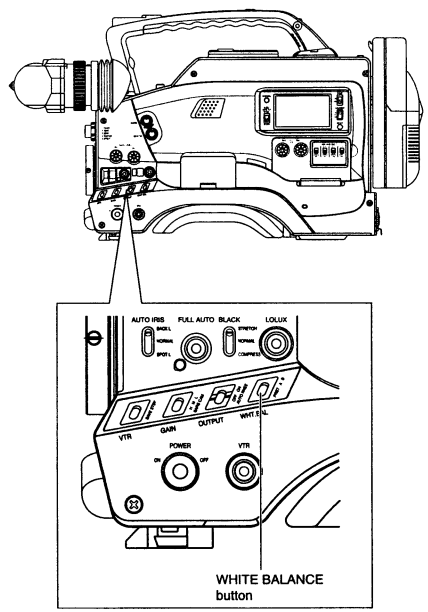

The FAW function adjusts the white balance value automatically as the lighting condition changes.
This mode is convenient when you have no time to adjust the white balance or when the camera is moved frequently in and out of places under different lighting conditions.

■ Setting procedure

The FAW function can be activated with item "FAW" on the Advanced Menu.
This item allows setting of the FAW function to one of the white balance switches, A, B or PRESET. Select "NONE" if the FAW function is not required.
See page 69.

CAUTION :

The FAW(Full-time Auto White balance) function cannot provide optimum white balance with an object outside the FAW adjustment range, for example when it contains only a single color or not enough white color.

11-2 IRIS (Brightness) Adjustment

LENS IRIS ADJUSTMENT

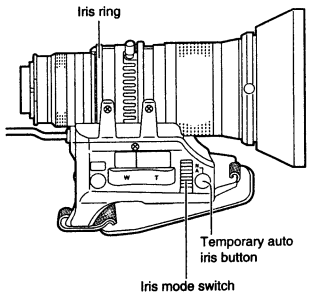

The lens iris can be adjusted by any of the following three methods.

- Automatic adjustment
  Set the iris mode switch to "A (Auto)".
  The iris is adjusted automatically according to the brightness of the object.
- Manual adjustment
  Set the iris mode switch to "M (Manual)".
  The iris can be adjusted manually by rotating the iris ring.
- Temporary auto iris adjustment
  When this button is pressed during manual iris adjustment, the auto iris adjustment mode is activated only while this button is held depressed.

■ Changing the auto iris adjustment setup

Under special lighting conditions such as back-light condition, it is often suitable to change the value set by the auto iris adjustment.
This can be done by any of the following methods.

- Setting the AUTO IRIS LEVEL switch of the camera head (See page 77.)
- Setting item "IRIS" in the Main menu screen. (See page 66.)

ZEBRA PATTERN DISPLAY DURING MANUAL ADJUSTMENT

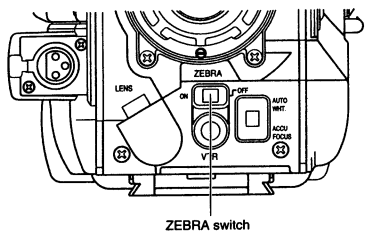

By setting the ZEBRA switch to ON, oblique stripes (zebra pattern) can be displayed in the sections with signal levels of 70% to 80% on the viewfinder screen.
The zebra pattern can be used as a reference for manual iris adjustment.
When adjusting the iris manually, adjust it so that the zebra patterns are displayed in the section which you want to stress in the object.

- The initial setting is 70 to 80%. However, with the "ZEBRA" setting on the ADVANCE MENU, zebra patterns can be displayed in the section of 85 to 95%, over 95% and over 100% in brightness level. (See page 70)

11-3 Shooting the Screen Image on the Computer Monitor

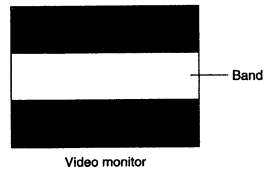

Video monitor

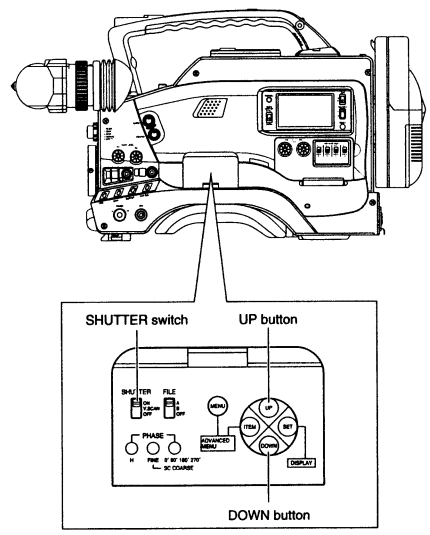

■ Outline

- The following operation allows the alignment of the shutter speed of the camera with the variable scanning rate of the computer monitor or display.
- When a computer monitor or display is shot with the camera, a bright horizontal line indicating excessive exposure is displayed in cases when the scanning rate of the monitor is faster than the shutter speed of the camera or a dark horizontal line indicating insufficient exposure is displayed in cases when the monitor's scanning rate is slower than the camera's shutter speed.
- The scanning frequency of the monitor is variable due to various reasons during the computer operation. Adjust the scanning rate so as to obtain a stable image while observing the image on the viewfinder screen.

■ Variable Scan [V.SCAN]

• Basic operation

Set the SHUTTER switch to the center position (V.SCAN) then adjust the shutter speed with the UP or DOWN button. (The speed is displayed on the viewfinder screen.)

• Compatible frequencies

The variable scan function is compatible with the scanning frequencies in the following range:
60.5 to 1966.7 Hz : U-ver.
50.4 to 1953.1 Hz : E-ver.

- If the SHUTTER switch has already been set to ON or V.SCAN, press the UP or DOWN button to display the shutter speed, then press the same button again to change the displayed speed.

11-4 Gain (Sensitivity) Adjustment

The gain should be switched when the brightness is not enough due to the poor lighting condition.

GAIN SWITCHING

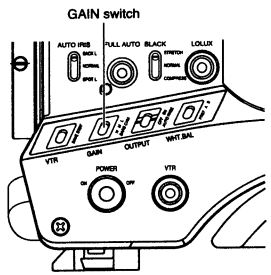

This switch allows the gain to be boosted when the illumination of the object is insufficient.

Switch Position	Factory-Set Gain
L	0 dB
M	9 dB
H	18 dB

When this is switched, the newly set gain is displayed for a few seconds on the status 0 or mode 1 screen inside the viewfinder.
Set it to L (0 dB) in normal use.

- The gain set with each of the switch positions can be set with "GAIN" of the ADVANCED MENU.
  See page 69 for details.
- It is also possible to use the ALC which varies the gain automatically.
  See page 69 for details.
- Smooth gain transition
  The gain transition can be made smoother using "SMOOTH TRANS" of the ADVANCED MENU.
  However, note that the SMOOTH TRANS function is not available if the switch is set to ALC.

Note :

CAUTION FOR THE GAIN SETTING

- When the GAIN is set to 18dB, GAMMA is fixed at the MIN and "FIX " is displayed on the GAMMA item of the Advanced menu screen.
- If the illumination is insufficient when GAIN is set to the ALC, the sensitivity is increased automatically. However, in order to make the screen look brighter, the noise is increased a little with the ALC (Auto Level Control) function compared to that when the sensitivity is increased manually.

GAIN BOOST UNDER LOLUX CONDITION

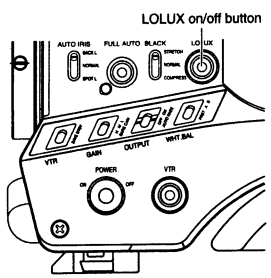

The LOLUX on/off button is designed to be used when insufficient illumination insufficient cannot be compensated for with the GAIN switch alone.
Press the button to enter the LOLUX mode in which the gain is boosted by about 33 dB.
"LOLUX ON" is displayed for a few seconds on the status 0 or 1 mode screen inside the viewfinder.
Pressing the button again cancels the LOLUX mode.
"LOLUX OFF" is displayed for a few seconds.

- When the LOLUX is in use, the image definition on the screen will degrade to increase residual images, but it is not a malfunction.

[Relationship between gain, iris and shutter]

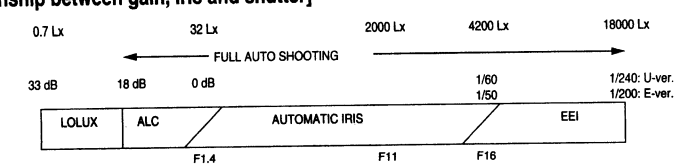

11-5 Switch Setup According to Illumination and Object

SWITCH FUNCTIONS

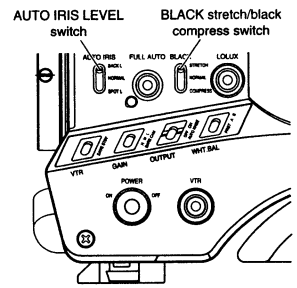

AUTO IRIS LEVEL switch
This switch allows changing of the reference value for the auto iris adjustment according to the lighting condition.

BACK. L : When the object is in the back-light condition. Sets the Auto Iris reference value to a value which is about 1 step wider than the standard setting.
NORMAL : Normal lighting condition.
SPOT. L : When the object is under a spotlight. Sets the Auto Iris reference value to a value which is about 1 step narrower than the standard setting.

BLACK stretch/black compress switch
On the black screen, this switch makes the image easier to see by varying the black gain.

BLACK STRETCH : Boosts the black gain to improve the reproducibility of black color.
NORMAL : Normal black gain.
BLACK COMPRESS : Attenuates the black gain to make the image sharper.

FULL AUTO SHOOTING (FAS) FUNCTION

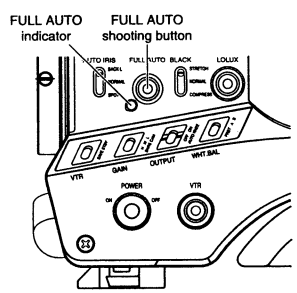

The FAS function provides a wide range of compatibility with shooting conditions which varies as you move between indoors and outdoors or between bright and dark locations. It is not necessary to change the switch and filter positions every time you move.
The FAS function provides an integrated control of the ALC (Automatic Level Control), Auto iris and FAW (Full-time Auto White balance) functions.

■ Operation

1. Simply press the FULL AUTO button to enter the FAS mode, in which the FULL AUTO indicator lights and "FAS" is displayed on the right of the viewfinder screen.
2. Pressing the FULL AUTO button again cancels the FAS mode and turns the FULL AUTO indicator off.

■ Automatic Setting Contents

- If you have been displaying the color bars, the screen is switched automatically to the camera image.
- The auto iris adjustment mode is entered even if the iris mode switch of the lens is set to Manual.
- The GAIN switch and WHT.BAL switch settings are defeated in the FAS mode.
- The LOLUX button setting is active even in the FAS mode. However, the ALC and EEI are defeated in the LOLUX mode, in which only the auto iris adjustment and FAW are used.
- All of the previous setting contents are recalled when the FAS mode is canceled.
- The SMOOTH TRANS function is defeated during switching by the FAS function.

Note:

- When the power is switched ON in the FAS mode, it will take approximately 10 seconds for the FAS to complete automatic adjustment.
  Do not perform any recording during these few seconds.
- During FAS mode, the audio recording level is not set automatically to the AUTO mode.
  This is set according to the AUTO/MANUAL switch of the VCR section.

11-6 Set Up Box Operation

When the set up box is used, the data registered in the FILE (A, B or OFF) memory can be written to be recalled later.

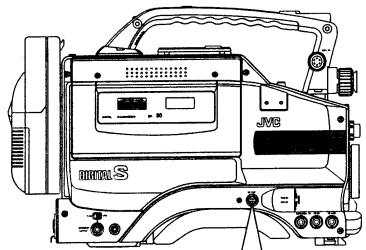

<Attaching>

Insert the set up box as shown in the figure and tighten the screw (regardless of the power being ON or OFF).

<Writing>

The setting data in the FILE can be written onto the set up box.

1. Select the FILE to be written.
Depending on the FILE switch setting, operation differs as follows:
A : Menu switch data registered in FILE A of this unit is written onto FILE A of the set up box.
B : Menu switch data registered in FILE B of this unit is written onto FILE B of the set up box.
OFF : Menu switch data registered in FILE OFF of this unit is written onto FILE OFF of the set up box.

2. In the normal screen, press the MENU button to display the MENU screen in the viewfinder.

3. Using the ITEM button, move the cursor (▷) to the SET UP BOX OPERATE item and press the SET button.
The SET UP BOX OPERATE screen appears and the FILE which is set at procedure "**1.**" is displayed. (A, B, OFF)

4. Using the ITEM button, move the cursor (▷) to the DATA WRITE item and press the SET button.
"DATA WRITE OK?" is displayed.
To cancel writing, press the MENU button.

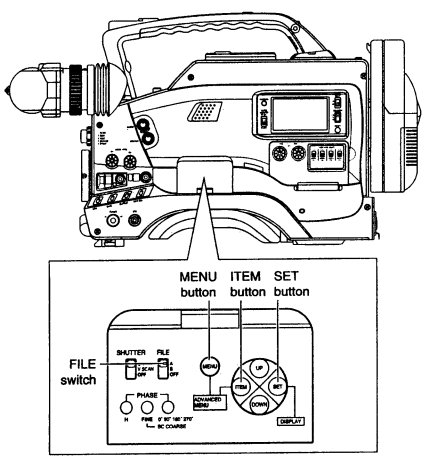

5. To write the data, press the SET button.
The data of this unit is written onto the set up box and "WRITE OK" is displayed.
To write another FILE data, repeat the operations in steps 1 to 5.

6. After writing is finished, press the MENU button to return to the MENU screen.
Press the MENU button again to restore the normal screen.

2

```
---MENU---
SCENE FILE A
DETAIL          :NORMAL
MASTER BLACK    :NORMAL
IRIS            :NORMAL
V.RESOLUTION    :NORMAL
BACK TALLY      :ON
F NO.DISPLA     :ON
AUDIO DISPLAY   :ON
SAFETY ZONE     :OFF
▷SET UP BOX OPERATE
PUSH SET BUTTON
```

3

```
-SET UP BOX OPERATE-
SCENE FILE A
DATA READ
▷DATA WRITE
PUSH SET BUTTON
```

4

```
-SET UP BOX OPERATE-
SCENE FILE A
DATA READ
▷DATA WRITE OK?
PUSH SET BUTTON
```

5

```
-SET UP BOX OPERATE-
SCENE FILE A
DATA READ
▷DATA WRITE OK?
WRITE OK
```


11-6 Set Up Box Operation (Cont'd)

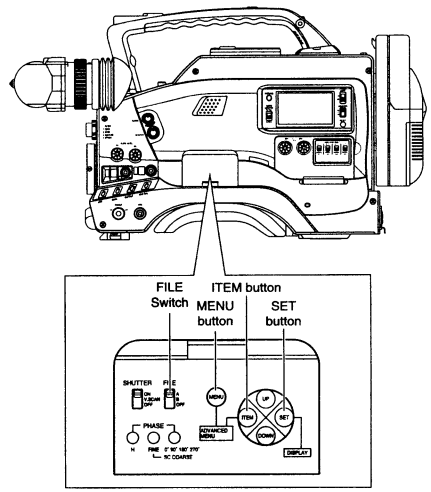

<Read Out>

The data in the set up box can be read out and written onto this unit.

1. Select the required FILE.
Depending on the FILE switch setting, operation differs as follows:
A : Menu switch data in FILE A of set up box is read out and written onto FILE A of this unit.
B : Menu switch data in FILE B of set up box is read out and written onto FILE B of this unit.
OFF : Menu switch data in FILE OFF of set up box is read out and written onto FILE OFF of this unit.

2. In the normal screen, press the MENU button to display the MENU screen in the viewfinder.

3. Using the ITEM button, move the cursor (▷) to the SET UP BOX OPERATE item and press the SET button.
The SET UP BOX OPERATE screen appears.

4. Using the ITEM button, move the cursor (▷) to the DATA READ item and press the SET button.
"DATA READ OK?" is displayed.
To cancel reading, press the MENU button.

5. To read out the data, press the SET button.
The data of the set up box is read out and written into the unit, then "READ OK" is displayed.
To read out another FILE data, repeat the operation in steps 1 to 5.

6. After reading is finished, press the MENU button to return to the MENU screen.
Press the MENU button again to restore the normal screen.

2

```
---MENU---
SCENE FILE A
DETAIL          :NORMAL
MASTER BLACK    :NORMAL
IRIS            :NORMAL
V.RESOLUTION    :NORMAL
BACK TALLY      :ON
F NO.DISPLA     :ON
AUDIO DISPLAY   :ON
SAFETY ZONE     :OFF
▷SET UP BOX OPERATE
PUSH SET BUTTON
```

3

```
-SET UP BOX OPERATE-
SCENE FILE A
▷DATA READ
DATA WRITE
PUSH SET BUTTON
```

4

```
-SET UP BOX OPERATE-
SCENE FILE A
▷DATA READ OK?
DATA WRITE
PUSH SET BUTTON
```

5

```
-SET UP BOX OPERATE-
SCENE FILE A
▷DATA READ OK?
DATA WRITE
READ OK
```

12. OTHERS

12-1 Connection with a Switcher

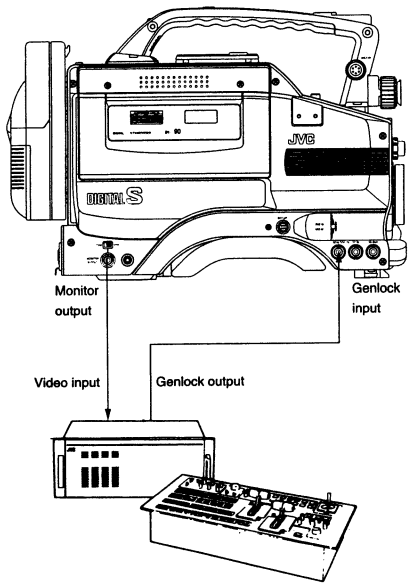

Genlocking is a function which synchronizes the video output signal of the camera with another component including a camera and switcher. The phases of the camera signal can be adjusted relatively with reference to the black burst or composite video signal. The camera is genlocked through the genlock input connector or the remote control unit.

Note :

When the power is switched ON while external sync signal is input, the screen moves in a vertical direction for a few seconds. This is not a malfunction.

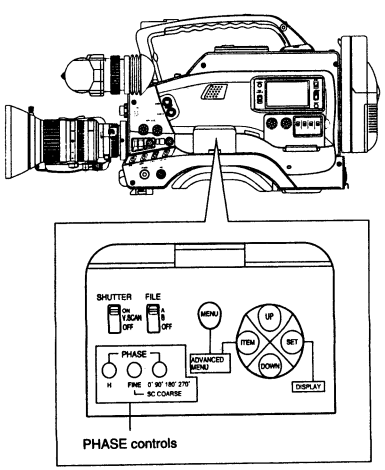

• Phase Adjustment

Two phase controls are provided for use in adjusting the horizontal and the color phases.

H : Horizontal sync phase control for use in adjusting the H phase so that the reference signal and the video output signals are coincident in terms of position and time on the screen.

SC COARSE : A rough adjustment of the sub carrier (SC) can be made while observing a vector scope. (0°,90°, 180°, 270°)

SC FINE : A fine adjustment can be made.
If sufficient adjustment cannot be made, switch the SC COARSE and try the SC FINE adjustment again.

- The adjustments require the use of external measuring instruments such as a waveform monitor, oscilloscope and vector scope.
  As the signal phase is unstable for a moment after the power of each piece of equipment is turned on, wait a while before starting the phase adjustment.

CAUTION :

The camera cannot be genlocked with a VCR playback signal because this may cause a sync error or color phase variation. However, this is not a malfunction but due to the timebase variation in the VCR playback signal that corresponds to the wow and flutter of the audio tape playback signal. If you should use the VCR playback signal as the reference signal, be sure to correct the signal using a timebase corrector or similar equipment.

12-2 Trouble Shooting

The unit provides warning on troubles in the operating situations using indicators, LCD displays and monitor tones.
The warning consists of the following two kinds of information.

- Alarm indications : These indications are given to provide warning on the VCR situation, for example when the tape or battery pack should be replaced.
- Error code display : In case an error occurs with the VCR operation, the unit applies self-diagnostics of the cases and shows the diagnostics results on the counter display. At the same time as displaying an error code display, the VCR stops operation automatically or ejects the cassette tape.

ALARM INDICATIONS

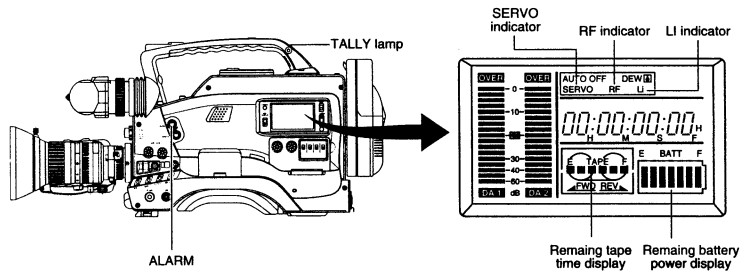

The following chart summarizes the operation of the alarm system.

■ SYMPTOMS

VCR Display Alarm indicator	Sympton	VCR section Behavior, Treatment
SERVO	Lights in the case the drum servo trouble in recording. Lights when the input video signal is disturbed or the unit is subject to shock. (Displayed only in record mode)	Operation : Continues. Treatment : • Check input video signal. • Signal is disturbed when the unit is subject to a violent shock. In other cases, consult your dealer or nearest JVC-authorized service agent.
RF	Lights in case of video head clog. (Displayed only during back-spacing for record-pause mode.)	Operation : Continues. Treatment : Clean the head with the special head cleaning tape. See page 7.
LI	Lights when lithium battery for time code generator and date/ time data backup is exhausted.	Operation : Continues. Treatment : Replace it with a new lithium battery. See page 34.
Remaining tape time E TAPE F	• Approx. 2 min. before tape end. (Displayed only in record or record-pause mode) The TALLY lamp and alarm tone are activated only in the record mode.	Operation : Continues.
E TAPE F	When tape has ended completely.	Operation : Stops.
Remaining battery power E BATT F	When the remaining battery power is low.	Operation : Continues. Treatment : Replace battery pack early.
BATT	When the battery power drops to an insufficient level.	Operation: Stops automatically. The camera may supply abnormal signals, when continuing to use a low power battery. This is not a malfunction.

→ See page 1-24 "1.10 HOW TO DETECT THE ALARM".

12-2 Trouble Shooting (Cont'd)

ALARM INDICATIONS (Con'd)

■ The LCD Display, WARNING Indicator, TALLY Lamp, Alarm Tone and Viewfinder Act Depending on Situations as Shown in the Following Table.

Alarm Indications				Viewfinder		
LCD Display	WARNING indicator	TALLY lamp	Alarm Tone	Warning Lights: REC Light	Warning Lights: BATT Light	On Screen Display
SERVO indicato	✠	✠	▮▮▮▮	✠	—	VTR WARNING (SERVO)
RF indicator	✠	✠	▮▮▮▮	✠	—	VTR WARNING (HEAD)
LI indicator	—	—	—	—	—	—
Remaining tape time E TAPE	◑	◑ (In record mode)	— ▮	◑	—	TAPE NEAR END Approx. 3min. before tape end.
E TAPE	●	✠	▮▮▮▮	✠	—	TAPE END
Remaining battery power E	◑	◑ (Except for play/search mode)	— ▮	◑	◑	LOW BATTERY
	●	✠	▮▮▮▮	✠	●	LOW BATTERY

- The alarm tone output is superimposed in the audio signal output from the monitoring loudspeaker or EARPHONE jack. The volume of the alarm tone can be adjusted with the ALARM control.

Display symbols ● : Steady lighting. ◑ : Blinking once per second. ✠ : Blinking 4 times per second. ▮▮▮▮ : Continuous sound. — ▮ — : Sound interrupted once per second. ▮▮▮▮ : Sound interrupted 4 times per second.

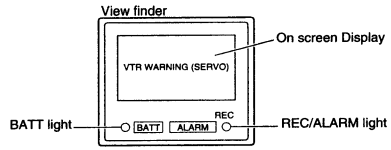

12-2 Trouble Shooting (Cont'd)

WARNING MESSAGE ON VIEWFINDER

■ Viewfinder Warning Lights

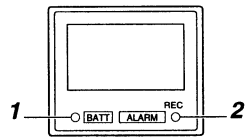

1. BATTERY light
- This blinks red when battery voltage becomes too low for the camera to operate.
- This lights red when the battery has runout.

2. REC/ALARM light
This light shines for these conditions.

Solid Green : • While recording

Blinks Green : • While the VCR prerolls before recording
- If the tape is finishing.
- If the VCR malfunctions.

Automatic warnings :

LOW BATTERY : This blinks when the battery level falls too low.
TAPE NEAR END : There are less than 3 minutes tape remaining.
TAPE END : The tape has run out.

■ Function Failures

When a trouble occurs on the VCR section or a mis-operation is performed, the following warning message will appear in the viewfinder.

- VTR WARNING (HEAD) :
  Lights in case of video head clog.
  (Displayed only during backspace for record-pause mode.)
- VTR WARNING (SERVO) :
  Lights in case drum servo trouble in recording.
- VTR WARNING (DEW) :
  Lights when condensation occurs in the VCR section.
- VTR WARNING (HARD) :
  Lights when a trouble occurs in the VCR section.
  For details of trouble, check the error code indication chart on page 85.
- REC INHIBIT :
  Lights when the VTR trigger button is pressed with an unrecordable cassette tape (with REC switch on the back of the cassette set to OFF) loaded.
- NO TAPE :
  Lights when the VTR trigger button is pressed with no cassette tape loaded.

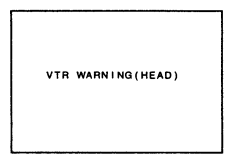

Status 0 or 1 mode

■ White Balance Function

AUTO WHITE A, B
NG : OBJECT : Check whether the object being shot is white enough. Check for proper filter.

AUTO WHITE A, B
ERROR : OVER LIGHT : Check to see if the sun or other bright light is shining in the lens. Check that the IRIS is adjusted properly.

AUTO WHITE A, B
ERROR : LOW LIGHT : Check to see if increasing gain or lighting will help.

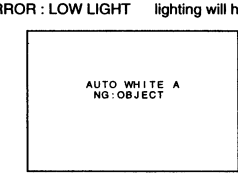

12-2 Trouble Shooting (Cont'd)

TROUBLES WITH ERROR CODE OUTPUTS

In case of trouble during the operation of the VCR, it applies self-diagnostics to identify the cause and displays the result in the form of an error code. The error code consists of the "main code" which indicates its contents and the "sub-code" which indicates the details. At this time, the LCD display, the WARNING indicator and alarm tone also act according to the current VTR situation.
In the viewfinder, the "VTR WARNING (DEW)" message appears when condensation occurs (error code 02:01), and the "VTR WARNING (HARD)" message appears when some of the other error codes are displayed.

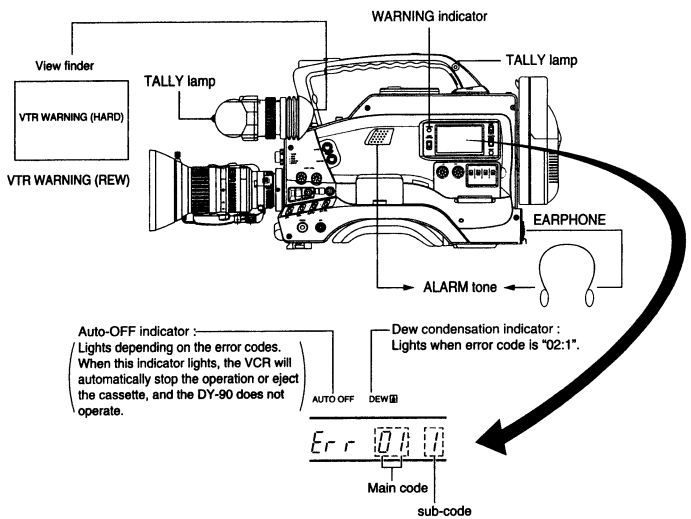

WARNING Indicator	Alarm Tone	Display	VCR Operation
Red blinking	Continuous	"Error code"	• Automatically ejects the cassette. It can be inserted again.
		"Error code" plus "AUTO OFF"	• Automatically stops operation or ejects the cassette. (Auto OFF*). "VTR WARNING (HARD)" is displayed on the viewfinder screen. The VCR does not accept any operation.
Red, steady lighting	Intermittent	"02:1" and "DEW"	• Dew is condensed in the VCR. "VTR WARNING (DEW)" is displayed on the viewfinder screen. The VCR does not accept operation until indicators disappear from the display.

★In the Auto OFF status, it is impossible to operate the VCR. This condition can be corrected by switching the POWER off and then switching it ON again. If the same trouble occurs again after the power is turned ON, there may be a failure in the VCR. Please consult your dealer or nearest JVC-authorized service agent.

This unit is microcomputer-controlled equipment, which may malfunction due to external noise or interference. In this case, switch the POWER OFF, remove the lithium backup battery, and switch the POWER ON again after a few minutes.

→ See page 1-25 "1.11 ERROR CODES".

12-2 Trouble Shooting (Cont'd)

TROUBLES WITH ERROR CODE OUTPUTS

Error Code	Error Details	VCR Operation	Treatment
01 : 1	Tape sensor LED wire is disconnected	Ejects cassette and does not accept any operation while the error is displayed.	Switch power ON again.
02 : 1	Condensation (dewing)	Does not accept any operation while the error is displayed. When condensation disappears, the indicators turn off.	Leave the unit with the power ON, until "DEW" display disappears.
32 : 1 32 : 2	Tape loading impossible.	Ejects cassette	Insert cassette again.
33 : 1 (AUTO OFF)	Tape unloading impossible.	Stops operation. Does not accept any operation.	Switch the power OFF and then switch it back ON. However, the tape may be damaged depending on the situation. So consult with the JVC authorized service agent.
56 : 3 to 56 : 8	Tape is cut or tape is slack.	Ejects cassette.	Check cassette and insert again if it is OK.
57 : 1 to 57 : 4	Tape end sensor error.	Rewinds tape to confirm. If tape end is detected again, ejects the cassette.	Check cassette and insert again if it is OK.
58 : 1 to 58 : 4	Tape beginning sensor error.	Fast forwards tape to confirm. If tape beginning is detected again, ejects the cassette.	Check cassette and insert again if it is OK.
70 : 1 (AUTO OFF)	Drum rotation stopped.	Stops operation. Does not accept any operation.	Switch the power OFF and then switch it back ON. However, the tape may be damaged depending on the situation. So consult with the JVC authorized service agent.
71 : 1 (AUTO OFF)	Capstan rotation stopped.	Stops operation. Does not accept any operation.	
72 : 1 to 72 : 5 (AUTO OFF)	Supply reel rotation error.	Stops operation. Does not accept any operation.	
72 : 7	Supply reel rotation error due to tightly wound tape.	Ejects cassette.	Check cassette and insert again if it is OK.
73 : 1 to 73 : 4 (AUTO OFF)	Take up reel rotation error.	Stops operation. Does not accept any operation.	Switch the power OFF and then switch it back ON. However, the tape may be damaged depending on the situation. So consult with the JVC authorized service agent.
73 : 7	Take up reel rotation error due to tightly wound tape.	Ejects cassette.	Check cassette and insert again if it is OK.

12-2 Trouble Shooting (Cont'd)

TROUBLES WITHOUT ERROR CODE OUTPUTS

Symptoms	Check points
Power cannot be switched ON.	• Is power supply connected properly? • Is battery pack recharged? • When the lithium battery is depleted, the power should not be turned on.
Recording is not possible.	• Is REC switch of cassette set it to ON? If it is OFF, set to ON.
Cassette is ejected.	• Is the cassette in use a DIGITAL S cassette? VHS or S-VHS cassettes are ejected whenever they are inserted.
Noise interferes with playback video.	• Video head may be clogged with dirt. Clean head with the special head cleaning tape. See page 7.
Time code or date/ time data are not displayed on the monitor screen.	• Time code and date/time data are not displayed on the monitor screen during recording or playback of VCR. The data is shown only on the counter display.
Time code and user's bit data are not displayed on the counter.	• Is TC DISP switch under the side panel cover set to SUB TC? If it is, set the switch to TC.
Remaining battery power display is incorrect.	• The setup menu item "BATT. TYPE SELECT" may not be set correctly according to the type of battery in use. If the menu item setting is wrong, set it correctly by opening setup menu item "BATT. TYPE SELECT".
Battery alarm is displayed and VCR enters OPERATE OFF mode even when a fully charged battery is used.	
Cassette can not eject after the power is turned on.	• The power supply unit's capacity may be insufficient. Check the power voltage. • If the power is turned off within 1 second of opening the cassette holder, the cassette holder may not close properly.
Viewfinder image looks dark or unclear.	• Adjust the contrast control. • Is the filter switch set to 5600K+ND? • Is the iris closed? • Is the shutter speed too fast? • Is the viewfinder cable correctly connected?
Noise appears when playing back a tape recorded with another VCR.	• When the tape recorded on another VCR is played back or used for recording, this phenomenon may occur caused by the tracking shift.
The scene change section is disordered when a tape recorded with another VCR is used.	
VCR section does not operate after loading the cassette.	• Does the cassette indication ((CO)) in the display light? When the cassette indication is not lit, the cassette cover is in the half-lock condition. Push the cassette cover to the end to securely lock the cassette.
MIC1 or MIC2 sound is not input. (E-ver. only)	• Using the [MIC1•MIC2] microphone select switch, select the mic input to be used.
A recording check is not possible with the viewfinder or monitor in the record-pause mode.	• Is the [CAM/VTR] switch set to the CAM position? If so, set it to the VTR position.
Playback image is not output.	

12-3 Hour Meter Display

The unit can display the running time of the drum as the hour meter data on the counter display.
The hour meter can be displayed by selecting setup menu Group 1.

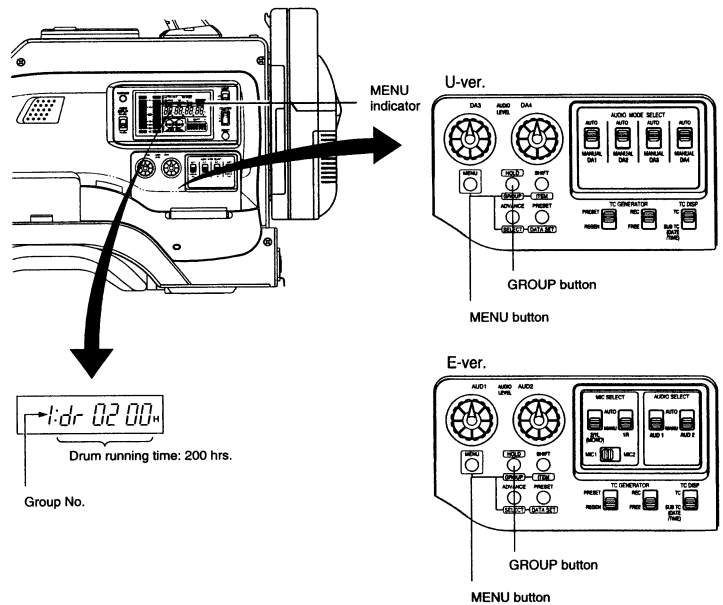

1. Turn the POWER switch to ON.
2. Press the MENU button to enter the setup menu mode.
   The MENU indicator lights on the display and the setup menu is shown on the counter display.
3. Press the GROUP button to display setup menu Group 1.
   → The drum operating hour data is shown on the counter display.
4. Press the MENU button to return to the normal mode.

→ See page 1-12 "1.9.1 Structure of DIAG mode".

12-4 Index

A
ACCU FOCUS switch 10
AC power supply 35
ADVANCED MENU 65
ADVANCE/SELECT button 18
ALARM control 13
Alarm indications (display side) 81
Alarm message display (viewfinder) 28
AUDIO indicator 27, 67
AUDIO INPUT SELECT 46
AUDIO LOW CUT SELECT 64
Audio level maters 16
AUDIO MODE SELECT switch 15
AUDIO MONITOR control 13
AUTO IRIS level switch 12, 77
AUTO OFF 84
AUTO WHITE NG, ERROR messages 83
AUTO WHITE switch 10

B
Back focus adjustment 43
BACK. L 12, 77
BACK TALLY 67
BACK TALLY Lamp 19
BARS 13
Basic system 30
Battery holder 21, 36
Battery pack 8, 35
Battery remaining 38
BATTERY VOLTAGE 64
BATT. TYPE SELECT 64
BLACK COMPRESS 13, 77
BLACK STRETCH 13, 77
Blooming 9

C
CAM • AUTO KNEE Switch 13
CAM/VTR Switch 11
Cassette cover 11
Cassette/tape direction/remaining tape time indicators 17
COLOR MATRIX 71
Color temperature conversion filter control knob 10, 41, 44
Condensation 8
Counter display 17
COUNTER switch 16

D
DA1/DA2 REC LEVEL control 13
DA1/DA3 LINE/MIC SELECT switch 20
DA1/DA3 IN connector 21
DA2/DA4 IN connector 10, 11
DA3/DA4 LEVEL control 15
DC INPUT connector (XLR-4 pin) 20, 35
DC OUT connector 20
DETAIL 66
DEW 8, 17, 84
DOWN button 14, 65
Drop frame 56, 64
DRUM HOUR METER 64
DNR LEVEL 71
DTL. FREQ. 70
DTL. V/H BAL 70

E
EARPHONE jack 20
EJECT button 19, 40
ERROR CODE (LED display) 84, 85
Error message (viewfinder) 83
Event display 29
External dimensions 91
External monitor adjustment 42

F
Fast-Forward 54
FF button 19
FILE reset 71
FILE switch 14, 65
F NO. DISPLAY 27, 67
FULL AUTO SHOOTING button 12
Full auto shooting (FAS) 77
Full time auto white (FAW) 44, 69, 73

G
GAIN L/M/H 67, 76
GAIN switch 12
GAMMA 70
GEN LOCK IN 11, 80

H
H PHASE 14, 80
Head cleaning 7
HOLD indicator 17
HOLD/GROUP button 18
HOUR METER 87

I
IRIS 66
ITEM button 14, 65

L
Lens (optional) 23, 31
LENS connector 10
Lens iris adjustment 74
Lens mounting ring 10
LENS TRIGGER 70
LI (Alarm indicator) 17, 81
LIGHT switch 16
LINE OUT connector (XLR - 5 pin) 21
Lithium battery 15, 34
Loading the cassette 40
LOLUX 13, 76
LONG PAUSE TIME SELECT 64

M
Main menu 65
MASTER BLACK 66
MENU button (camera section) 14
MENU button (display side) 18
MENU indicator 17

12-4 Index (Cont'd)

Mic holder mounting screws 11
Microphone 32
MONITOR OUTPUT connector 11
Monitoring audio 48
Monitoring loudspeaker 15

N
NO TAPE 83
Non-drop frame 56, 64

O
Operating time 38
Operation cover 19
Operation screen 69
Optional accessories 91
OUTPUT 13

P
PB indicator 17
PCM audio 46
Periodical maintenance 7
Phase adjustment 80
Play 19, 53
Power supply 35
POWER switch 12, 39
PRESET/DAT SET button 18
PRESET/REGEN switch 18

R
REC INHIBIT 83
REC level 47
REC TIME 69
REC/FREE run switch 18
Record-Pause (standby) mode 51
Remaining battery power 17, 22, 81, 82
Remaining tape time 22, 81, 82
RESET button 16
Resetting the FILE data 71
REW (Rewind) 19, 54
RF indicator 17, 81, 82

S
SAFETY ZONE 29, 67
SAVE 12, 39
SC COARSE 14, 80
Scene changing point 52
SC FINE 14, 80
SERVO indicator 17, 81, 82
SET UP BOX 11, 67, 78
SET/DISPLAY button 14, 65
SHIFT/ITEM button 18
SHUTTER switch 14
SLAVE indicator 17
Slave-lock 58
Smear 9
SMOOTH TRANS 69
SPOT. L 77
Status screens 25
STBY 12, 39, 51
STOP button 19
Sub-time code 60
SYSTEM reset 72

T
TAPE REMAIN 27, 64
TC DISP switch 18
TC IN, OUT connector 11
Time code 17, 56
Tripod base 32
TROUBLE SHOOTING 81

U
U-BIT SLAVE ON/OFF 64
Unloading the cassette 40
UP button 14, 65
User's bit 56

V
Variable scan (V. SCAN) 14, 75
VCR display 27
VCR setup menu 62
VF connector 10
Video cassette 8
Viewfinder (optional) 24, 31
Viewfinder mount base 10
Viewfinder screen display 25
Viewfinder warning 83
Voltage display 27
V. RESOLUTION 66
VTR SAVE, STBY 51
VTR switch 12
VTR trigger button 10, 12
VTR WARNING 83

W
WARNING indicator 16
Warning indicator inside the viewfinder 25
White balance adjustment 13, 44

Z
ZEBRA 10, 70, 74

12-4 Index

A
ACCU FOCUS switch 10
AC power supply 35
ADVANCED MENU 65
ADVANCE/SELECT button 18
ALARM control 13
Alarm indications (display side) 81
Alarm message display (viewfinder) 28
AUDIO indicator 27, 67
AUDIO INPUT SELECT 46
AUDIO LOW CUT SELECT 64
Audio level maters 16
AUDIO MODE SELECT switch 15
AUDIO MONITOR control 13
AUTO IRIS level switch 12, 77
AUTO OFF 84
AUTO WHITE NG, ERROR messages 83
AUTO WHITE switch 10

B
Back focus adjustment 43
BACK. L 12, 77
BACK TALLY 67
BACK TALLY Lamp 19
BARS 13
Basic system 30
Battery holder 21, 36
Battery pack 8, 35
Battery remaining 38
BATTERY VOLTAGE 64
BATT. TYPE SELECT 64
BLACK COMPRESS 13, 77
BLACK STRETCH 13, 77
Blooming 9

C
CAM • AUTO KNEE Switch 13
CAM/VTR Switch 11
Cassette cover 11
Cassette/tape direction/remaining tape time indicators 17
COLOR MATRIX 71
Color temperature conversion filter control knob 10, 41, 44
Condensation 8
Counter display 17
COUNTER switch 16

D
DA1/DA2 REC LEVEL control 13
DA1/DA3 LINE/MIC SELECT switch 20
DA1/DA3 IN connector 21
DA2/DA4 IN connector 10, 11
DA3/DA4 LEVEL control 15
DC INPUT connector (XLR-4 pin) 20, 35
DC OUT connector 20
DETAIL 66
DEW 8, 17, 84
DOWN button 14, 65
Drop frame 56, 64
DRUM HOUR METER 64
DNR LEVEL 71
DTL. FREQ. 70
DTL. V/H BAL 70

E
EARPHONE jack 20
EJECT button 19, 40
ERROR CODE (LED display) 84, 85
Error message (viewfinder) 83
Event display 29
External dimensions 91
External monitor adjustment 42

F
Fast-Forward 54
FF button 19
FILE reset 71
FILE switch 14, 65
F NO. DISPLAY 27, 67
FULL AUTO SHOOTING button 12
Full auto shooting (FAS) 77
Full time auto white (FAW) 44, 69, 73

G
GAIN L/M/H 67, 76
GAIN switch 12
GAMMA 70
GEN LOCK IN 11, 80

H
H PHASE 14, 80
Head cleaning 7
HOLD indicator 17
HOLD/GROUP button 18
HOUR METER 87

I
IRIS 66
ITEM button 14, 65

L
Lens (optional) 23, 31
LENS connector 10
Lens iris adjustment 74
Lens mounting ring 10
LENS TRIGGER 70
LI (Alarm indicator) 17, 81
LIGHT switch 16
LINE OUT connector (XLR - 5 pin) 21
Lithium battery 15, 34
Loading the cassette 40
LOLUX 13, 76
LONG PAUSE TIME SELECT 64

M
Main menu 65
MASTER BLACK 66
MENU button (camera section) 14
MENU button (display side) 18
MENU indicator 17

12-4 Index (Cont'd)

Mic holder mounting screws 11
Microphone 32
MONITOR OUTPUT connector 11
Monitoring audio 48
Monitoring loudspeaker 15

N
NO TAPE 83
Non-drop frame 56, 64

O
Operating time 38
Operation cover 19
Operation screen 69
Optional accessories 91
OUTPUT 13

P
PB indicator 17
PCM audio 46
Periodical maintenance 7
Phase adjustment 80
Play 19, 53
Power supply 35
POWER switch 12, 39
PRESET/DAT SET button 18
PRESET/REGEN switch 18

R
REC INHIBIT 83
REC level 47
REC TIME 69
REC/FREE run switch 18
Record-Pause (standby) mode 51
Remaining battery power 17, 22, 81, 82
Remaining tape time 22, 81, 82
RESET button 16
Resetting the FILE data 71
REW (Rewind) 19, 54
RF indicator 17, 81, 82

S
SAFETY ZONE 29, 67
SAVE 12, 39
SC COARSE 14, 80
Scene changing point 52
SC FINE 14, 80
SERVO indicator 17, 81, 82
SET UP BOX 11, 67, 78
SET/DISPLAY button 14, 65
SHIFT/ITEM button 18
SHUTTER switch 14
SLAVE indicator 17
Slave-lock 58
Smear 9
SMOOTH TRANS 69
SPOT. L 77
Status screens 25
STBY 12, 39, 51
STOP button 19
Sub-time code 60
SYSTEM reset 72

T
TAPE REMAIN 27, 64
TC DISP switch 18
TC IN, OUT connector 11
Time code 17, 56
Tripod base 32
TROUBLE SHOOTING 81

U
U-BIT SLAVE ON/OFF 64
Unloading the cassette 40
UP button 14, 65
User's bit 56

V
Variable scan (V. SCAN) 14, 75
VCR display 27
VCR setup menu 62
VF connector 10
Video cassette 8
Viewfinder (optional) 24, 31
Viewfinder mount base 10
Viewfinder screen display 25
Viewfinder warning 83
Voltage display 27
V. RESOLUTION 66
VTR SAVE, STBY 51
VTR switch 12
VTR trigger button 10, 12
VTR WARNING 83

W
WARNING indicator 16
Warning indicator inside the viewfinder 25
White balance adjustment 13, 44

Z
ZEBRA 10, 70, 74

12-5 Specifications

• CAMERA SECTION

Image pickup device	: 2/3-inch interline CCDs
Color separation optical system	: 3-color separation prism
Number of effective pixels	: 380,000 pixels (768 (H) × 493 (V)) : U-ver. 440,000 pixels (754 (H) × 581 (V)) : E-ver.
Color system	: NTSC (R-Y, B-Y encoder) : U-ver. PAL (R-Y, B-Y encoder) : E-ver.
Color bars	: SMPTE color bar : U-ver. EBU colour bar : E-ver.
Sync system	: Internal sync External sync (VBS or BB)
Lens mount	: Bayonet system (FB 48.0 mm, 2/3" CCD cameras)
Optical filter	: 3200 K, 5600 K, 5600 K + 1/16ND, 3200 K + Efect (cross) filter : U-ver. 3200 K, 5600 K, 5600 K + 1/4ND, 5600 K + 1/16ND : E-ver.
Sensitivity	: F11, 2000 lx
Gain	: –3, 0, 6, 9, 12, 18 dB, LOLUX, ALC
Minimum illumination	: 4 lx with F1.4, +18 dB gain
Lolux minimum illumination	: 0.75 lx with F1.4
Registration	: 0.05% or less (excluding lens distortion)
Contour correction	: Horizontal dual-edged, Vertical 2 H
Shutter speed	: 100 (U-ver.), 120 (E-ver.), 250, 500, 1000, 2000 Hz
V.SCAN speed	: 60.5 Hz to 1966.7 Hz : U-ver. 50.4 Hz to 1953.1 Hz : E-ver.

• VCR SECTION

Format	: DIGITAL S
Tape width	: 12.65 mm
Tape speed	: 57.737 mm/sec : U-ver. 57.795 mm/sec : E-ver.
Record/Play time	: 104 minutes (With a DS-104 cassette)
F.F/rewind time	: Approx. 4 minutes (With a DS-64)
[VIDEO]	
Frequency response	: Y : 0 to 5.0 MHz R-Y/B-Y : 0 to 2.0 MHz
Sampling frequencies	: Y : 13.5 MHz R-Y/B-Y : 6.75 MHz
Quantization	: 8-bit
S/N	: More than 52 dB (during BR-D80/D50 reproduction with component output)
[AUDIO]	
Number of channels for recording	: PCM × 4, cue track × 2
Sampling frequency	: 48 kHz
Quantization	: 16-bit
Frequency response	: 20 Hz to 20 kHz (PCM)
Dynamic range	: More than 85 dB (PCM) (during BR-D80/D50 reproduction)
Wow & flutter	: Below measurable limit
[Time Code System]	
Time code signal	: Compliance with SMPTE standard : U-ver. Compliance with EBU standard : E-ver.
LTC input	: 0 ± 6dBs, high impedance, unbalanced
LTC output	: 0 ± 6dBs, low impedance, unbalanced

• INPUT/OUTPUT SIGNALS

Video signal output	: 1 V (p-p), 75 Ω (BNC) (Composite video signal)
Lens	: 12-pin connector
DA4 (MIC 1) input	: –52 dBs, unbalanced, 6-pin
DA2 (MIC) input	: –60 dBs, balanced, +48 V XLR-3-pin
DA1/DA3 input	: +4 dBs/10 kΩ (select the switch) –60 dBs/3 kΩ (select the switch) +48 V (ON/OFF switch) (XLR3), balanced
Audio output	: 0 dBs, low impedance, (XLR5), balanced
Earphone output	: –60 to –17 dBs, at 8 Ω load
DC input	: 12 VDC⎓ (11 to 15 VDC⎓)
Auxiliary power output	: 12 VDC⎓ : max. 0.1A (11 to 15 VDC⎓)

• GENERAL

Power consumption	: 34W with VF-P116 (Max) 30W with VF-P115 or VF-P116 (when recording) : U-ver. 12VDC ⎓ 2.8A with VF-P116 (Max) 12 VDC⎓ 2.45A with VF-P115 or VF-P116 (when recording) : E-ver.
Mass	: Approx. 6.9 kg [with VF-P115, A18 × 9B12, Flat shape type lithium ion battery, accessory Micrphone]
Operating temperatures	: 0 °C to 40 °C
Operating humidty	: 30 % to 80 % RH
Storage temperatures	: –20 °C to 60 °C

• ACCESSORIES

Microphone (Monaural)	: × 1
Tripod base	: × 1
Set up box	: × 1
Lithum battery	: × 1 (CR2032)
Instructions	: × 1

12-5 Specifications (Cont'd)

OPTIONAL ACCESSORIES

Viewfinder	: VF-P115, VF-P116
Power zoom lens	: A18 × 9B12, YJ18 × 9BK12
AC power adapter	: AA-P250, AA-G10
DC battery pack	: NB-G1 (12 V, 2.2 AH)
Microphone	: MV-P615, MV-P616, MV-P612
Mic holder	: KA-A90

EXTERNAL DIMENSIONS (unit : mm)

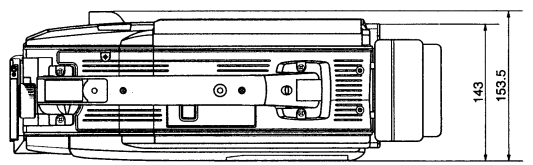

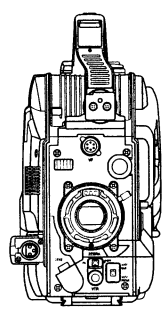

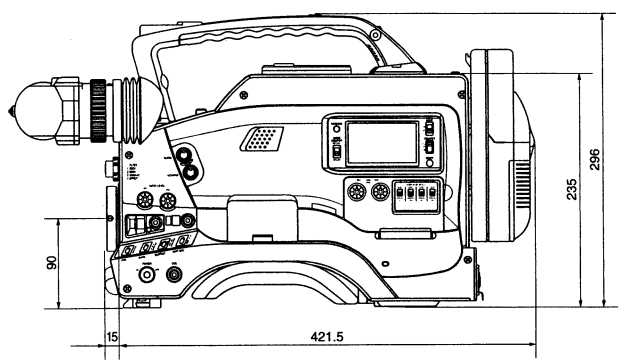

Design and specifications are subject to change without notice.

SECTION 1
SERVICE CAUTIONS AND DISASSEMBLY

1.1 REPLACEMENT OF FUSE

Before replacing fuse, make sure to investigate the reason why it blew out and to remove cause of the failure first in order to prevent trouble from spreading.

CAUTION:

FOR PROTECTION AND SAFETY IN OPERATION, FUSE SHOULD BE REPLACED ONLY BY THE ONES WITH RECOMMENDED PARTS NOs.

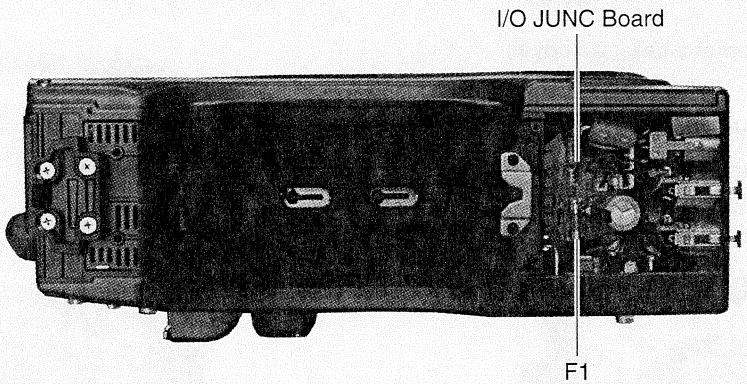

Fig. 1-1 Fuse circuit protectors layout diagram

Board names	Symbol No.	Symptoms in disconnection	Parts No.
I/O JUNC	F1	Power cannot be turned on. (No power is supplied the set.)	QMF51U1-4R0-S : for U-ver. QMF51A2-4R0-S : for E-ver.

1.2 HOW TO REMOVE THE OUTER CASE

1.2.1 How to remove the cassette cover

(1) Remove two screws ①.
(2) Slide the cassette cover in the arrow direction in order to remove it.

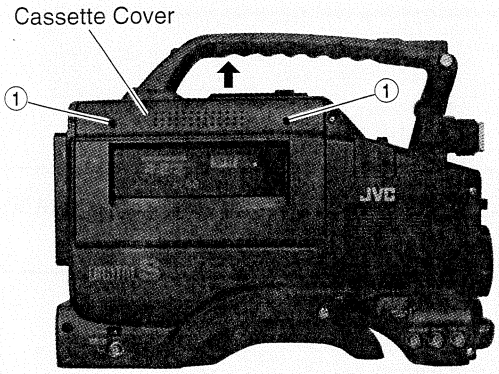

Fig. 1-2-1 How to remove cassette cover

1.2.2 How to remove the left side cover

(1) Remove the cassette cover.(refer to the subsection 1.2.1)
(2) Loosen the screw ② to remove the set up box.
(3) Loosen the five screws ③ to remove the left side cover.

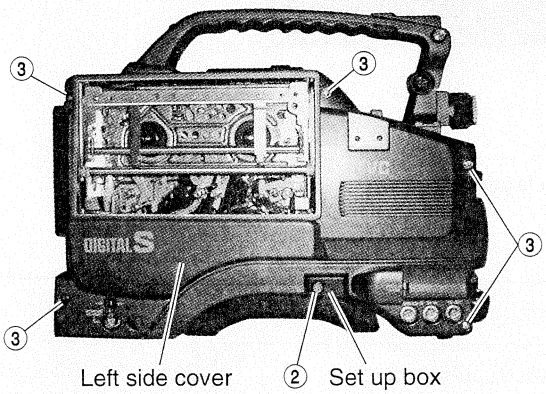

Fig.1-2-2 (1) How to remove the left side cover

(4) Disconnect the connector Ⓐ.

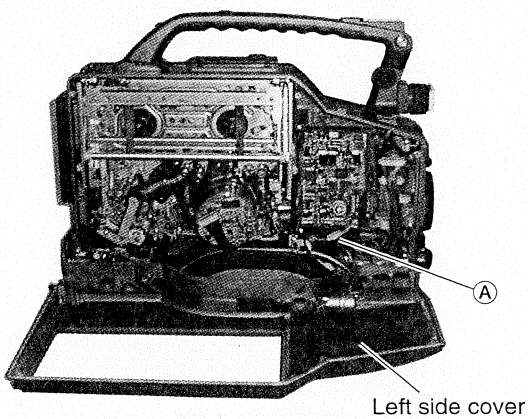

Fig.1-2-2 (2) How to remove the left side cover

1.2.3 How to open the right side cover

(1) Loosen the five screws ④.

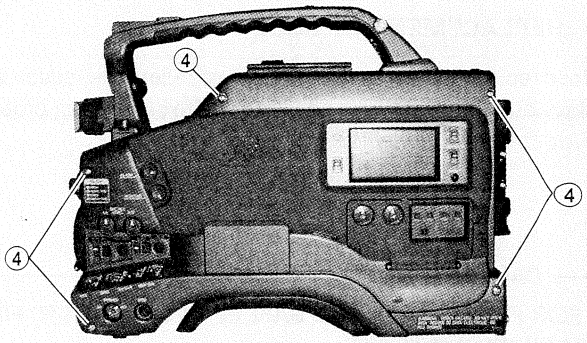

Fig.1-2-3 (1) How to open the right side cover.

(2) Open the right side cover towards the front.

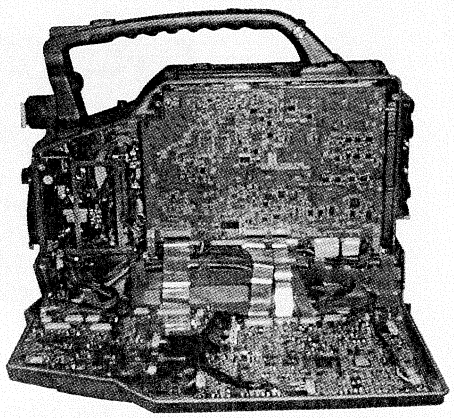

Fig.1-2-3 (2) Diagram with the right side cover open

1.2.4 How to remove the bottom cover

(1) Remove the four screws ⑤ to remove the bottom cover.

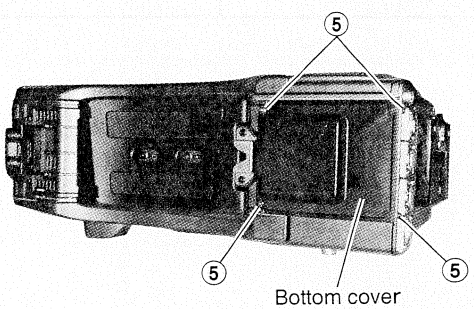

Fig.1-2-4 How to remove the bottom cover

1.3 HOW TO MAKE A DIAGNOSTICS OF THE BOARD

1.3.1 Main board layout diagram

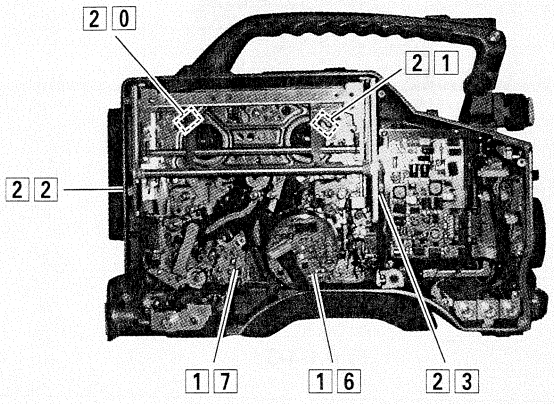

Left side

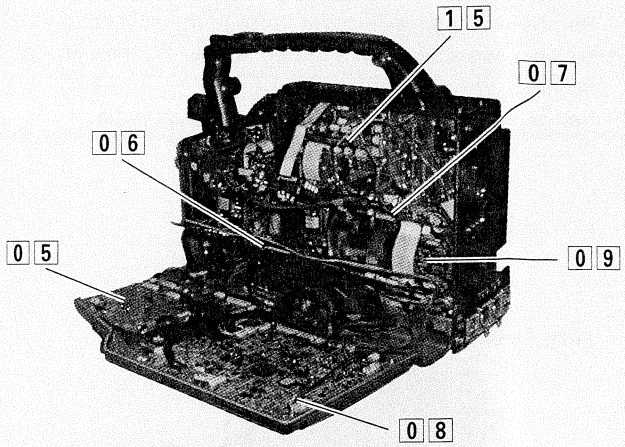

Right side

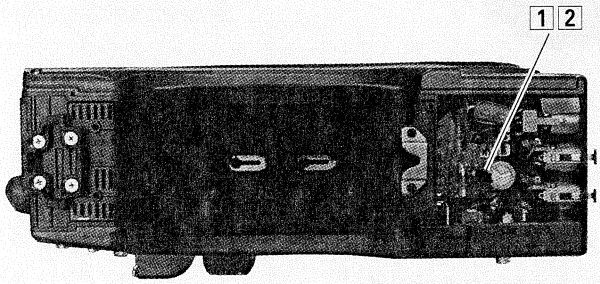

Bottom side (connector box)

Board name	Board layout position	Remarks
01 DR 02 03 04 ISB/G/R	Camera Head	Section 1.5.1
05 CP 08 AUDIO/LCD	On the right side cover	Section 1.5.2 Section 1.6.1
06 MAIN 07 SS/RFP 09 PR 14 OPERATION 15 MEC/IF	On the side of right side cover	Section 1.6.2 Section 1.6.3 Section 1.6.4
16 MDA 17 A/C HEAD 18 MODE SENS 19 AL SENS 20 TU REEL FG 21 SP REEL FG 22 BEGIN SENS 23 END SENS	On the side of the left side cover	
12 I/O JUNC	Inside the connector box	Section 1.6.4

Fig.1-3-1 Main Board layout diagram

1.4 REMOVING THE OPTICAL FILTER ASSEMBLY AND OPTICAL BLOCK ASSEMBLY

(1) Remove the right side cover (refer to the subsection 1.2.3)
(2) Loosen two screws ⑥ and two screws ⑦ then lift up the handle.
(3) Remove the four screws ⑧ from the front panel.

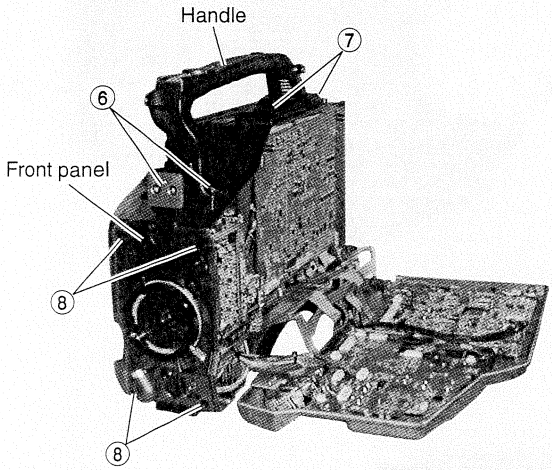

Fig. 1-4-1

(4) Pull out the optical block assembly together with the front panel gently toward the front.

> **NOTE**
> **Be very careful not to scratch or damage the circuit boards and flat cables.**

(5) Loosen the two screws ⑨.
(6) Take out the optical filter assembly in the direction of the arrow.

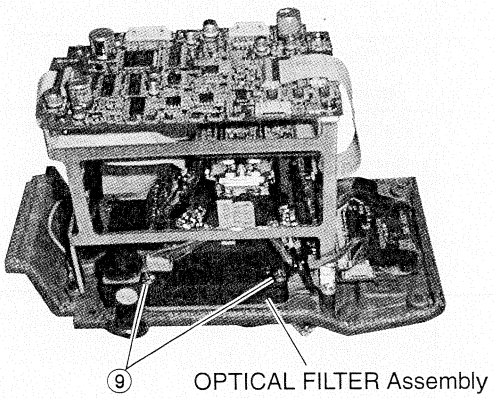

Fig. 1-4-2

(7) Disconnect the three connectors Ⓑ, Ⓒ and Ⓓ direction in order to remove the flexible wires.
(8) Remove the four screws ⑩ then remove the DR board.

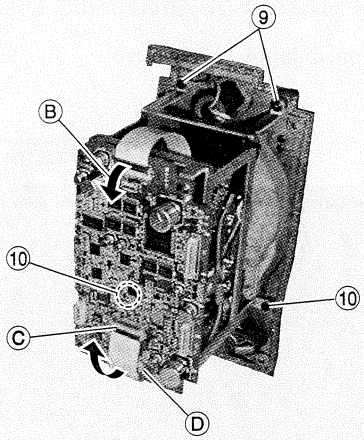

Fig. 1-4-3

- Usually, the optical filter assembly does not need to be removed. However, when it is removed then attached, observe the position relationship between the filters and filter shaft as shown in Fig. 1-4-4.

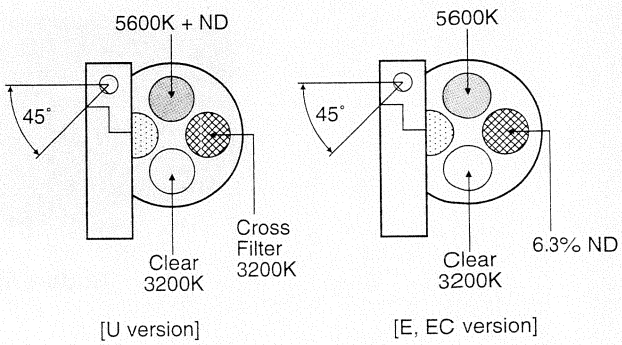

Fig. 1-4-4 Position Relationship Between Filters and Filter Shaft

(9) Remove the four screws ⑪ from the front panel, and separate the front panel from the optical block assembly.

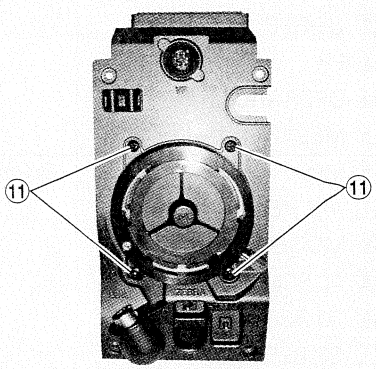

Fig. 1-4-5

NOTES

- **The CCDs are precision-fixed on the prisms. Therefore, even if a CCD fails, it is not possible to replace the deffective CCD alone. The entire optical block assembly should be replaced in such a case.**
- **The optical block assembly (SCM0986-N0A[NTSC]/ SCM0986-P0A[PAL]) provided as a service part is not equipped the DR board. When replacing the assembly, attach the circuit boards and the bracket to the new optical block assembly before mounting it in the camera head.**

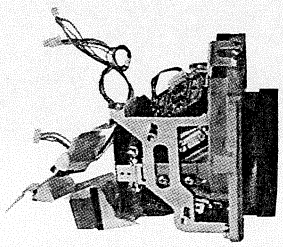

Fig. 1-4-6 Optical Block Assembly

NOTE

When re-assembling the optical block assembly to the body, make sure that do not injure each wire assembly. Otherwise , it may cause a machine trouble.

1.5 DISASSEMBLY OF THE EACH BOARDS IN CAMERA PART

1.5.1 Disassembly of DR board

(1) Remove the right side cover. (refer to the subsection 1.2.3)
(2) Remove the 4 screws from the front panel. (refer to the subsection 1.4)
(3) Draw out the optical block assembly front wards together with front frame.
(4) Disconnect the three connectors Ⓑ, Ⓒ and Ⓓ direction in order to remove the flexible wires.
(5) Remove the four screws ⑩ then remove the DR board.

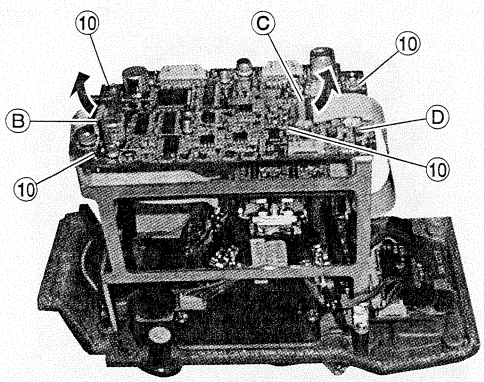

Fig.1-5-1

1.5.2 Disassembly of the CP board

(1) Open the right side cover. (refer to the subsection 1.2.3)
(2) Remove the five screws ⑫ .
(3) Lift the CP board up.

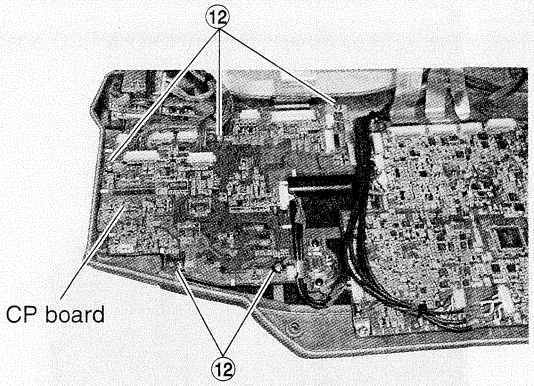

Fig. 1-5-2

1.5.3 Disassembly of the PS board

(1) Remove two screws and remove the cassette cover.(refer to subsection 1.2.1)
(2) Remove the left side cover .(refer to the subsection 1.2.2).
(3) Remove two screws ⑬ then remove the PS board.

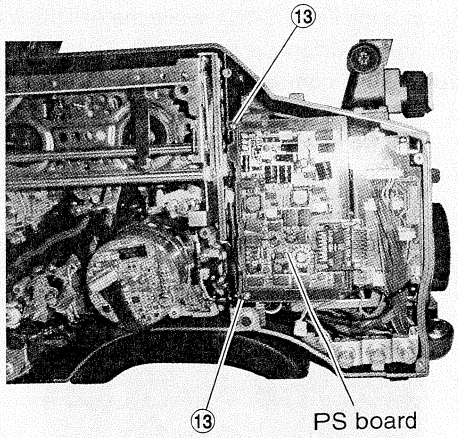

Fig. 1-5-3

1.6 DISASSEMBLY OF THE EACH BOARD IN THE VTR PART

1.6.1 Disassembly of an AUDIO & LCD board

(1) Open the right side cover.(refer to the subsection 1.2.3) The AUDIO & LCD board is fixed on the back of the right side cover.

(2) Remove five screws ⑭ and then AUDIO & LCD board can be removed.

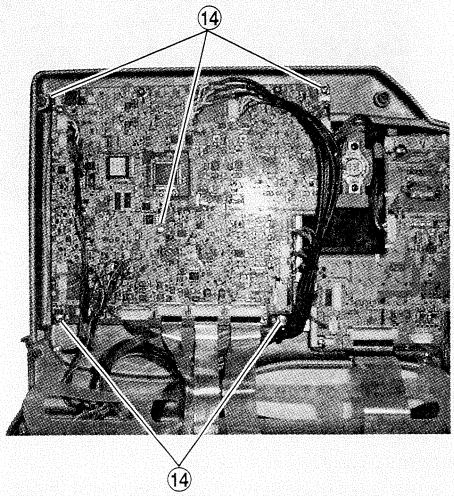

Fig. 1-6-1 (1)

(3) As shown in the Fig. 1-6-1(2), while the AUDIO & LCD board is standing, the diagnosis is possible.

Caution : If the connector is removed from lithium battery, all memory in LCD CPU will be clear. Refer to section 1.13 for more details.

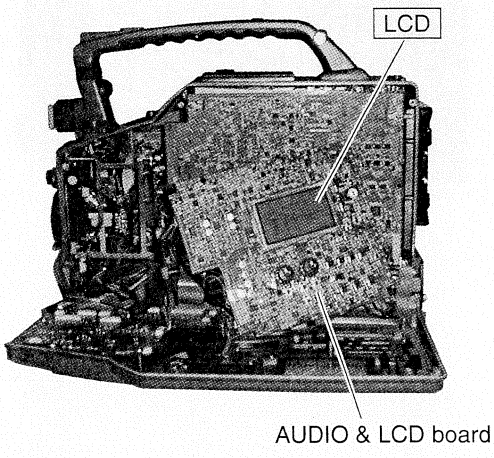

Fig. 1-6-1 (2)

1.6.2 Disassembly of the MAIN board

(1) Open the right side cover. (refer to the subsection 1.2.3)

(2) Remove the two screws ⑮ and put the MAIN board down in front of you.

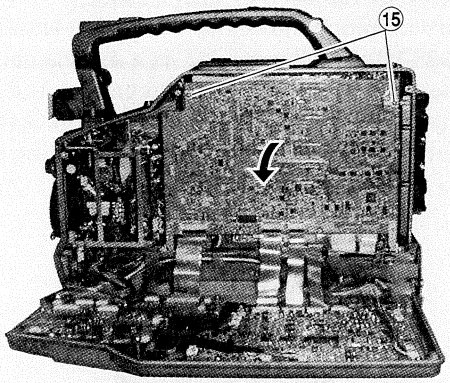

Fig. 1-6-2

1.6.3 Disassembly of the SS/RFP board

(1) Open the right side cover. (refer to the subsection 1.2.3)

(2) Remove the two screws and put the MAIN board down in front of you. (refer to the subsection 1.6.2)

(3) Remove the two screws ⑯ and put the SS/RFP board down in front of you.

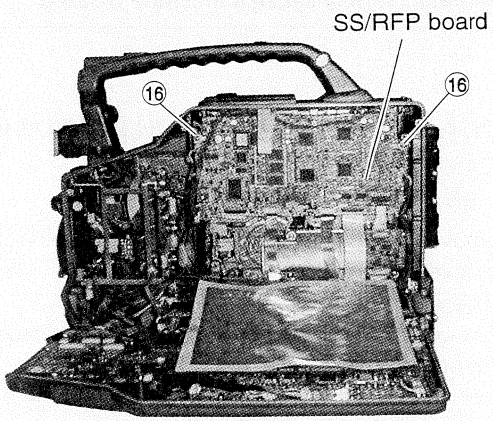

Fig. 1-6-3 (1)

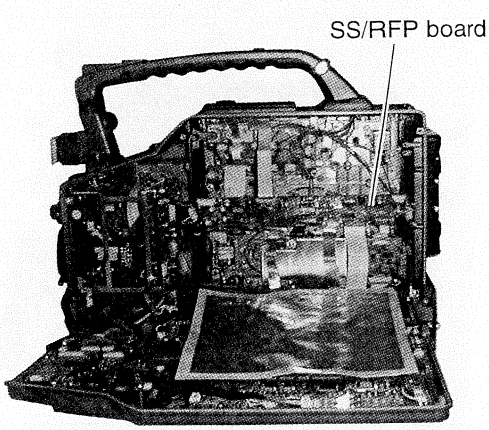

Fig. 1-6-3 (2)

1.6.4 Disassembly of PR board

(1) Open the right side cover. (refer to the subsection 1.2.3)
(2) Remove the two screws and put the MAIN board down in front of you. (refer to the subsection 1.6.2)

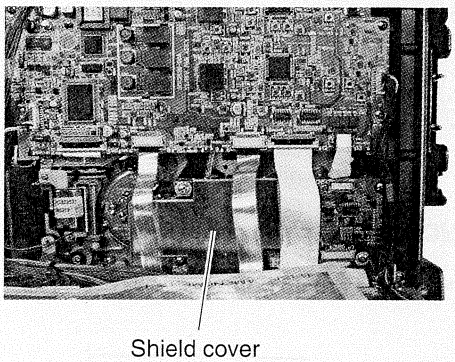

Fig 1-6-4 (1)

(3) Remove the four screws ⑰, then PR board can be removed.

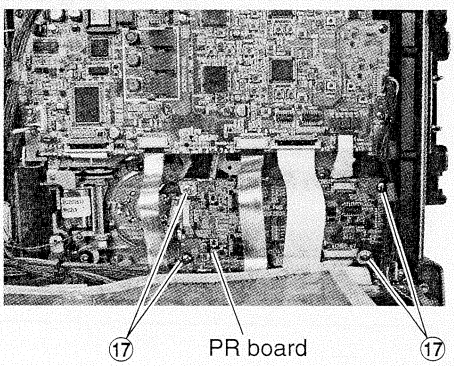

Fig 1-6-4 (2)

1.6.5 Disassembly for diagnosis of the back side of the main deck

(1) Remove the two screws and put the SS/RFP board. (refer to the subsection 1.6.3)
(2) Remove the two screws and put the PR board . (refer to subsection 1.6.4)
→ Diagnosis of the back side of the main deck.

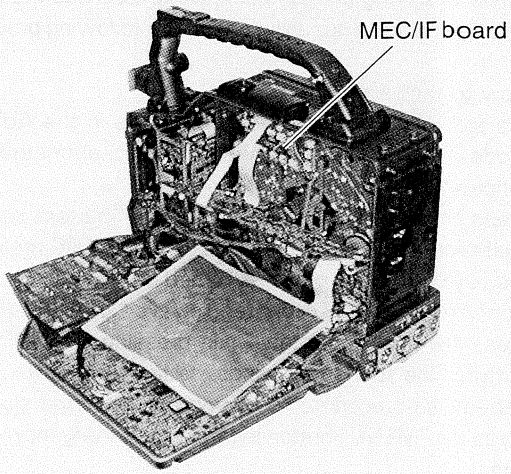

Fig. 1-6-5

1.6.6 Disassembly the I/O JUNC board

(1) Remove the bottom cover. (refer to the subsection 1.2.4)
(2) Remove the four screws ⑱ and then I/O JUNC board can be removed.

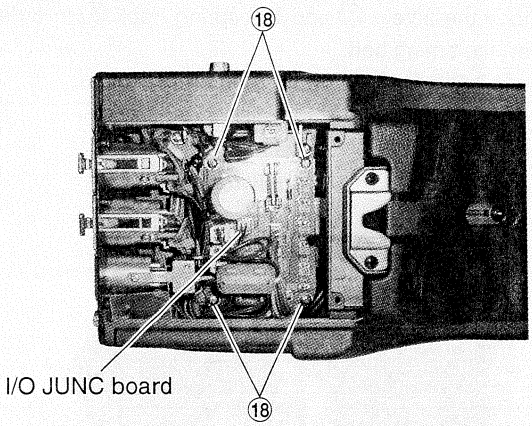

Fig. 1-6-6

1.7 HOW TO TAKE A CASSETTE OUT IN AN EMERGENCY

In case a cassette cannot be ejected because of malfunctions of the motor and mechanism systems, or any tape slack occurs, follow the procedure explained below to take the cassette out.

(1) Remove the left side cover. (Refer to the subsection 1.2.2)
(2) While observing the condition of the tape and mechanism, take the cassette out using one of the following procedures.

- How to wind a slack tape
  If a slack tape occurs when the unit is in the AUTO OFF mode, the tape should be wound with the emergency role function.

(1) Press the "STOP" and the "OPERATE" buttons simultaneously for three sec. or more in the AUTO OFF mode or immediately after the power is turned on.
(2) Confirm that the LCD counter displays " 63:P .00 00", then press the "REW" button while pressing the "OPERATE" button. (The supply reel winds the tape for approx. 80 ms.)
(3) Repeat the procedure (2) to wind up the tape slack, then press the "MENU" button to cancel the emergency role function.
(4) Press the "EJECT" button to take the cassette out.

- How to take a cassette out manually
  If the emergency role function does not operate because of a malfunction of the reel motor, or the unloading does not operate because of a malfunction of the loading motor, follow the procedure explained below to take a cassette out.

(1) Take out the SS/RFP board and the PR board. (Refer to the subsection 1.6.3 and 1.6.4)
(2) Remove the screw ① and the spring hook Ⓐ in order to loosen the timing belt.
(3) Take the timing belt out at the mode motor side.

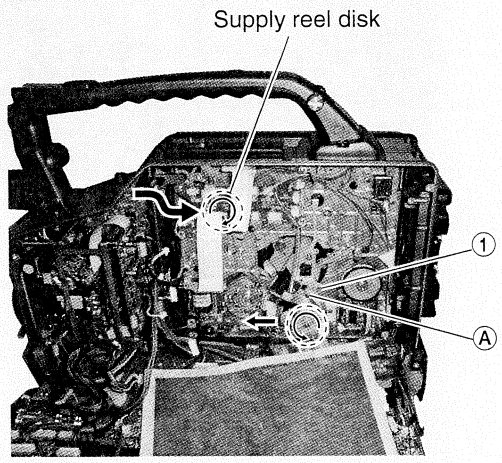

Fig. 1-7 How to take a cassette out manually

(4) Turning the timing belt in the direction shown in the Fig. 1-7 allows performing of the unloading and eject functions. Any tape slack occurring with this procedure should be wound by inserting a finger from the direction shown with an arrow in the diagram in order to turn the supply reel disk.

* Refer to subsection 2.7.12 for instructions on installing the timing belt.

1.8 FUNCTIONS OF INTERNAL SWITCHES

Internal switches are as follows.

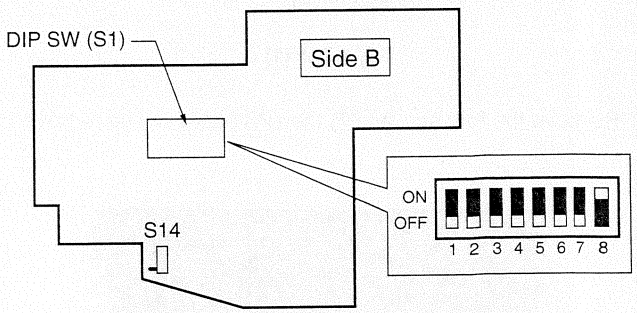

Fig. 1-8-(1) Switches on the CP board

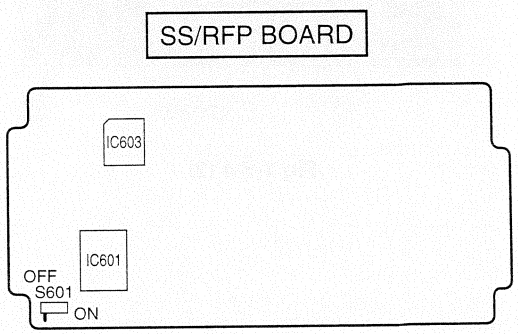

Fig. 1-8-(2) Switch on the SS/RFP board

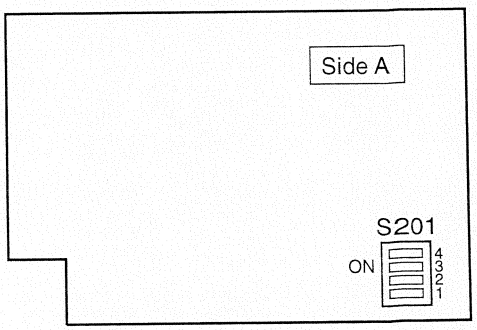

Fig. 1-8-(3) Switch on the MAIN board

1.8.1 Dip switch S1 on the CP board have the functions as described below.

Symbol	No.	Switch Name	Function	Initial
S1	1	Adjustment mode	Adjustment mode ON/OFF	OFF
	2	Check mode	Check mode ON/OFF	OFF
	3	Shading correction	Shading correction ON/OFF	OFF (Activated)
	4	Not use		OFF
	5	Not use		OFF
	6	Color MATRIX setting	Color MATRIX setting mode ON/OFF	OFF
	7	Setup	ON (0% Setup)/OFF (7.5% setup) : NTSC Do not care (0% setup) :PAL	OFF
	8	Function setting	Initial setting of camera's function	Refer to table 1-8-3

Table 1-8-1

- **Adjustment mode (S1-1)**
  Setting S1-1 to ON initiates the adjustment mode.
  For details of this mode, please read section "3.2.7 Adjustment procedure in the adjustment mode".

- **Check mode (S1-2)**
  Setting S1-2 to ON initiates the check mode.
  This mode is used to display the auto white balance and auto iris data which stored in CPU on the viewfinder screen. It will be able to display on the monitor screen, too.
  (Refer to the "3.2.6 Simultaneous display in both viewfinder and monitor")
  (This mode do not use for adjustment)

```
— CHECK MODE —
R-G              : *
B-G              : *
R GAIN LEVEL     : *
B GAIN LEVEL     : *
PEAK             : *
APL              : *
NAM ERROR        : *
GAIN *dB         : *
```

R-G/B-G
This shows the R,G,B signal input to the CPU to control white balance with R-G and B-G.

R GAIN LEVEL / B GAIN LEVEL
These two items of data show the control signal level for a white balance of R and B channels.

PEAK
This data shoes the peak-hold value of the signal in 1 vertical scanning period.

APL
This data shows the average value of video signal level.

NAM ERROR
This data shows the NAM value for use in the auto iris control.

GAIN
This data shows the GAIN value that is set by the [GAIN] switch located on the right side of the main unit. When the full automatic shooting mode is operated, "ALC" is shown.

- **Shading (S1-3)**
  Setting S1-3 to ON / OFF allows to select whether the camera output signal is to be with Shading correction or not.

Setting	Function	Initial Setting
OFF	Shading correction is activated.	OFF
ON	Shading correction is inactivated.	

Table 1-8-2

NOTE
When shading correction is activated, vartical lines might be appeared on monitor screen.

- **Color MATRIX setting (S1-6)**
  Setting S1-1 to ON initiates the color Matrix setting mode.
  For details of this mode, please read section "1.15".
  (This adjustment is usually not necessary to be done. Perform it only when it is required to do so, as the customer want to do special setting.)

- **Setup(S1-7 : Only for NTSC model)**
  Setting S1-7 to ON/OFF allows to select whether the camera out signal is to be with setup or not. The factor setting is OFF for with the no setup. The signal level does not change by changing the position of this switch.(Adjustment after switching is not necessary).

- **Function setting (S1-8)**
  The initial setting described in table 1-8-3 and 1-8-4 will be switched according to the setting of S1-8.

S1-8	NTSC *	PAL *
ON	U version	E version
OFF	Japan version	EC version ** [E(x) version]

Table 1-8-3

* Automatically selected for NTSC or PAL by HD frequency.
** EC [E(x)] version means CHINA market version. Please refer to section.

Function		S1-8		
		NTSC		PAL
		OFF	ON	Do not care
GAIN	L	0 dB	0 dB	0 dB
	M	6 dB	9 dB	9 dB
	H	9 dB	18 dB	18 dB
V. SCAN		60.5 – 249.7	60.5 – 1966.7	50.4 – 1953.1
ALC GAIN		0 to +12 dB	0 to +18 dB	0 to +18 dB
EEI		1/60 to 1/240	1/60 to 1/240	1/50 to 1/200

Table 1-8-4

The GAIN switch can be set with the [ADVANCED MENU].

1.8.2 Internal switch on CP board (S14)

This switch is used to cut for the communication from CPU to VTR SS/RFP board.

Setting	Function	Initial Setting
VTR	Communicate for VTR SS/RFP board.	VTR
RS-232C	Do not communicate for VTR SS/RFP board and can be communicated for others.	

Table 1-8-5

1.8.3 Internal switch on SS/RFP board (S601)

This switch is used to select the warning cancellation.

Setting	Function	Initial Setting
OFF	The warning detection circuit works.	OFF
ON	(1) It does not enter the warning mode (excluding alarm display). (2) Mechanism operation is available without an AV micro computer (MAIN board).	

Table 1-8-6

NOTE

This switch has to be OFF except when warning occurrence requires analysis.

1.8.4 Internal switch on MAIN board (S201)

This switch is to be used to adjust for the DRUM'S charactristic. (refer to subsection 2.5.2)

1.8.5 EEPROM (Camera)

IC9 on the CP board is an EEPROM (electrically erasable and programmable read-only memory), serving to store the data as below.

If the EEPROM fails and has to be replaced, set the data as below.

- Adjusted value with [ADJUSTMENT MODE]
- Setting details for [MAIN MENU] and [ADVANCED MENU]
- Address data of blemish position
- Auto white balance data (AW1/AW2)
- V-SUB voltage data

1.8.6 Displaying version numbers of the ROMs

When the power is switched ON by the [OPERATE] switch while also pressing the [MENU] button, the version number of the ROM (IC4 on the CP board) is indicated on the view finder screen for 1 second.

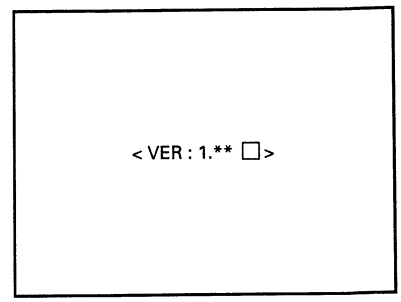

□ mark	Meaning	
U	U version	(NTSC)
E	E version	(PAL)
C	EC [E(x)] version	(PAL)
I	Japan version	(NTSC)

NOTE

If the ROM (IC4 on the CP board) is replaced, SYSTEM RESET is required. (refer to the subsection 1.8.7.)

1.8.7 SYSTEM RESET

When the power is switched ON by the [OPERATE] switch while also pressing the [SET] button, the system is reset and data set at MENU screen returns to the initial setting.

The items to be initialized with the system reset are shown below.

<Items which are set to be initialized>

- Setting data of [MAIN MENU]

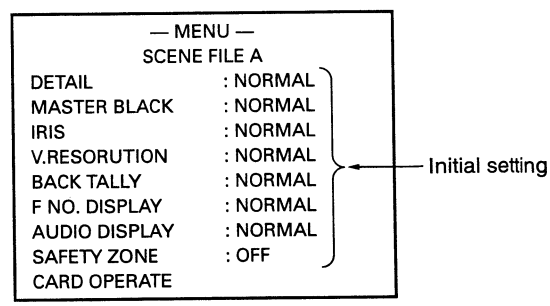

- [ADVANCED MENU] screen
  The details for FILE A and FILE B set at the [SCENE FILE] which will be initialized.

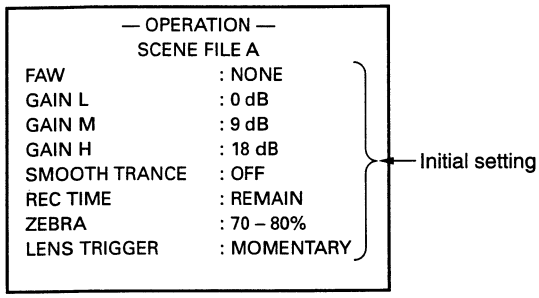

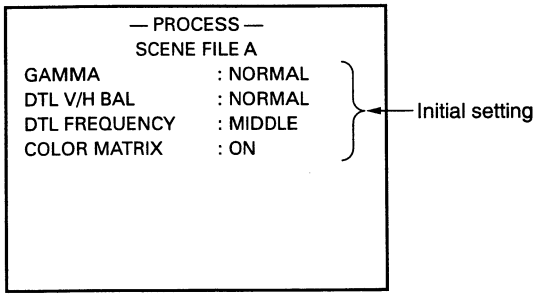

- Other initial setting

Functions	Initial setting values
SHUTTER	NTSC 1/100 PAL 1/120
V. SCAN	NTSC 1/100.2 PAL 1/120.1
STATUS	STT 0
LOLUX	OFF
FULL AUTO	OFF
W. BAL A	R ch 84 B ch 156
W. BAL B	R ch 84 B ch 156

Table 1-8-7

<Items of which the setting will not be initialized>

- Setting date for [ADJUSTMENT MODE] and [SERVICE MENU].
- Setting for mechanical switches.

1.8.8 Detect area of Auto Iris

The exposure detection system used for the Auto Iris is based on a zone pattern that assigns a priority according to the probable important subject area.

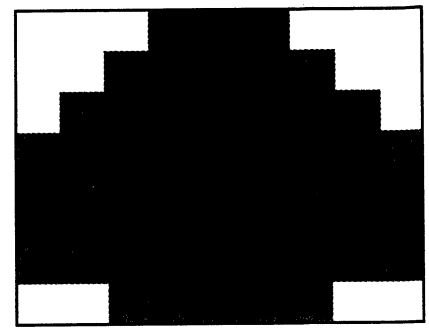

1.8.9 Tripod base

See the KA-510U service manual No. 60065 for servicing.
The tripod is not exactly same as KA-510U. See note for the difference.

Note

These 1/4 and 3/8 inch fixing tripod holes are not povided for the KA-510U.

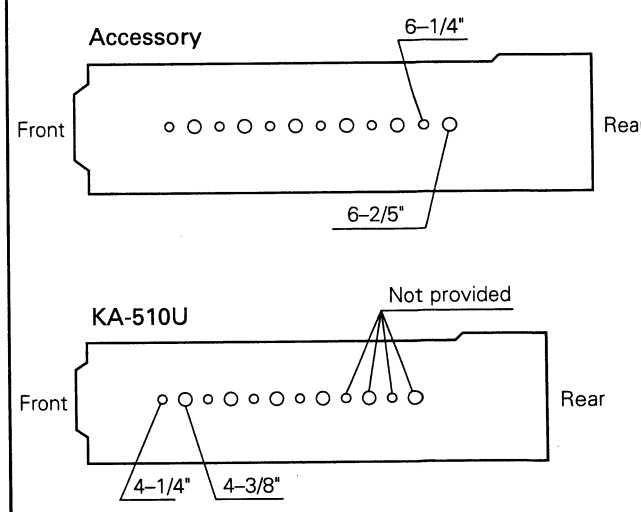

1.9 DIAG MODE

1.9.1 Structure of DIAG mode

DIAG (diagnostics) mode is used for service operation. There are nine groups as shown in the Fig. 1-9-1.

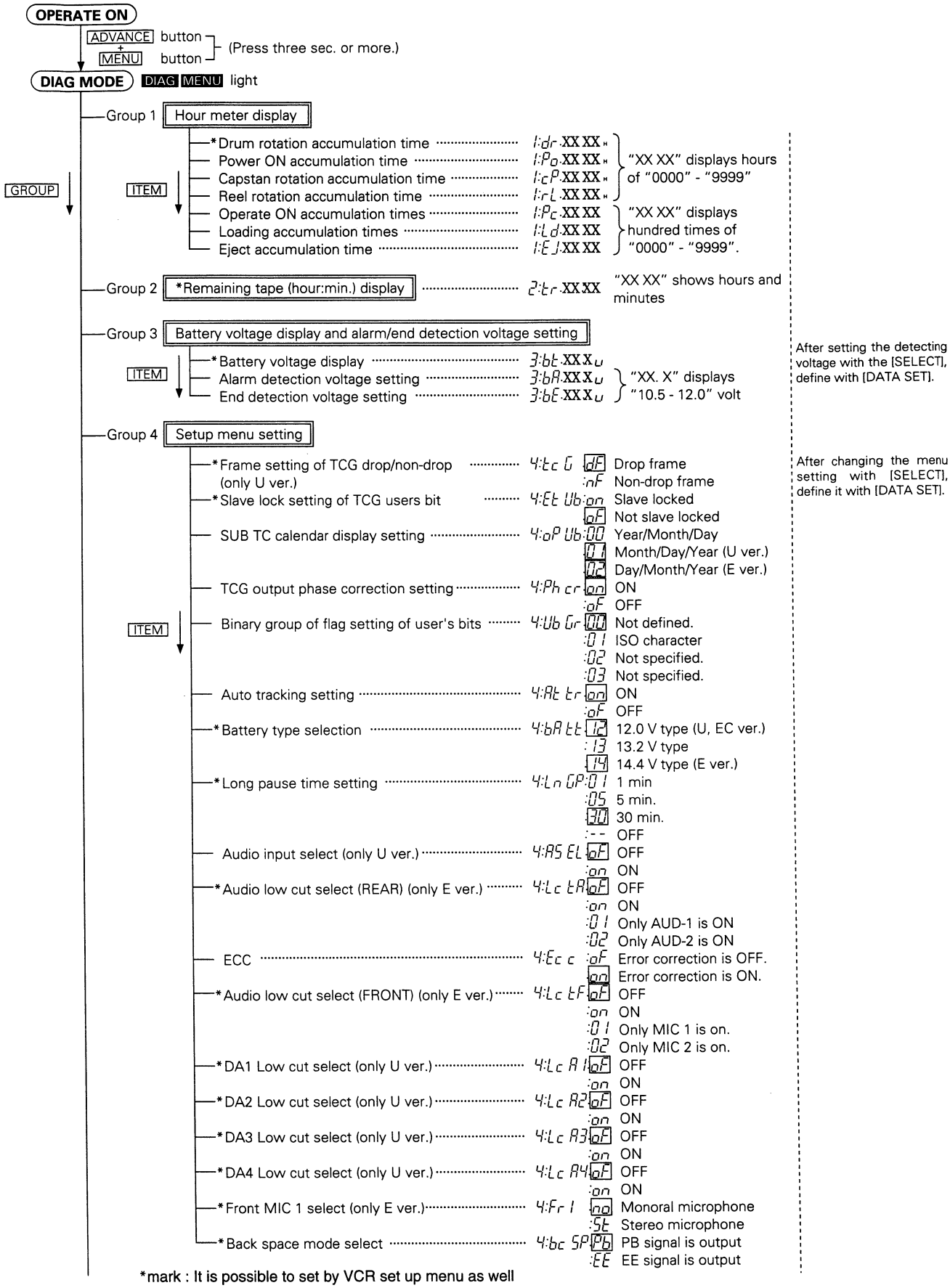

*mark : It is possible to set by VCR set up menu as well

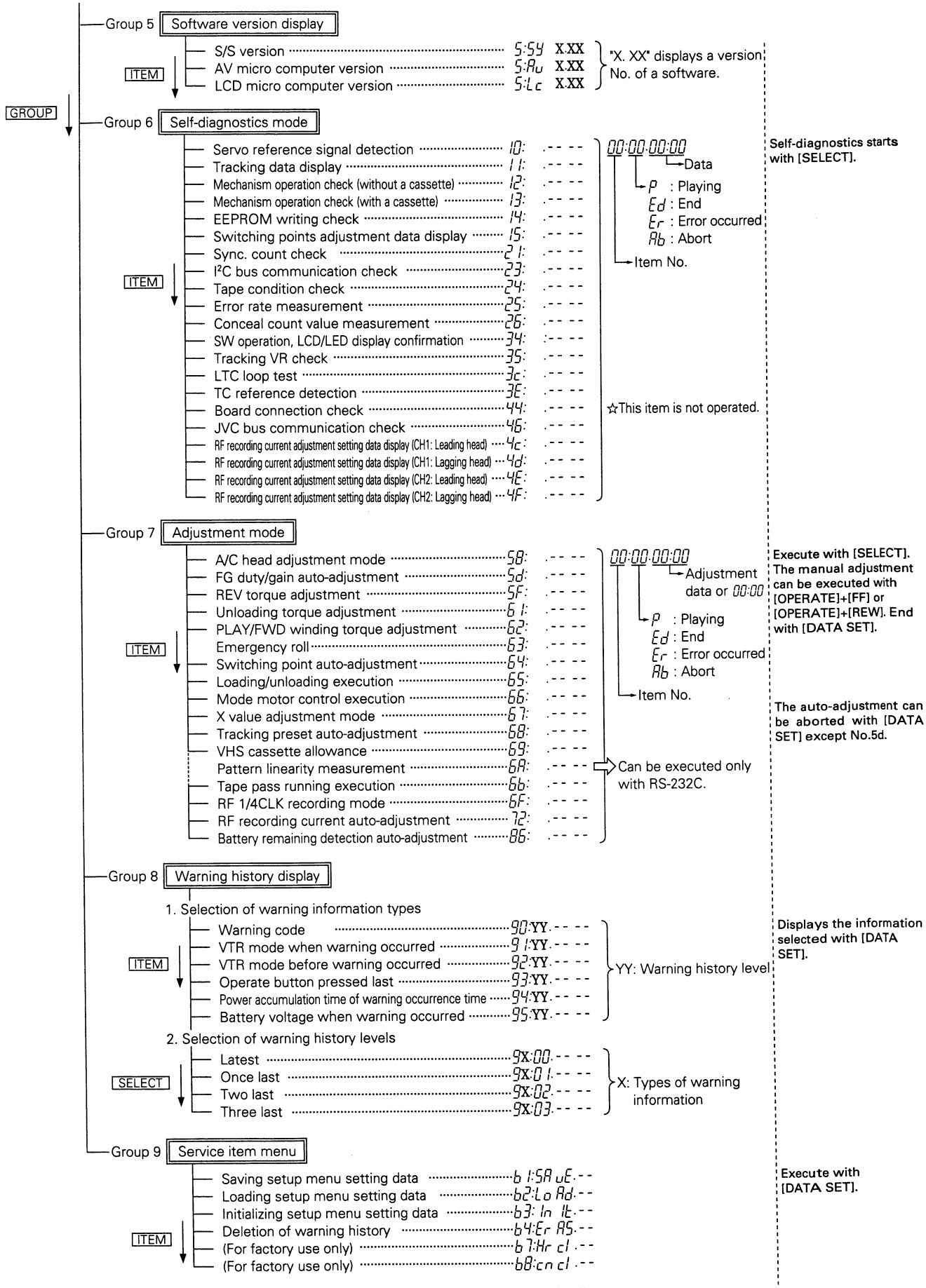

Fig. 1-9-1 DIAG MODE

1.9.2 How To Select Items

(1) Set the [POWER SW] to ON, then open the operation cover ①.

(2) Initiate DIAG mode.
Open the door ② at the TIME CODE/SETUP MENU setting section, then hold the [MENU] button for three sec. or more while pressing the [ADVANCE] button.

→ **[MENU] and [DIAG] display light on the display and the DIAG menu appears on the counter display.**

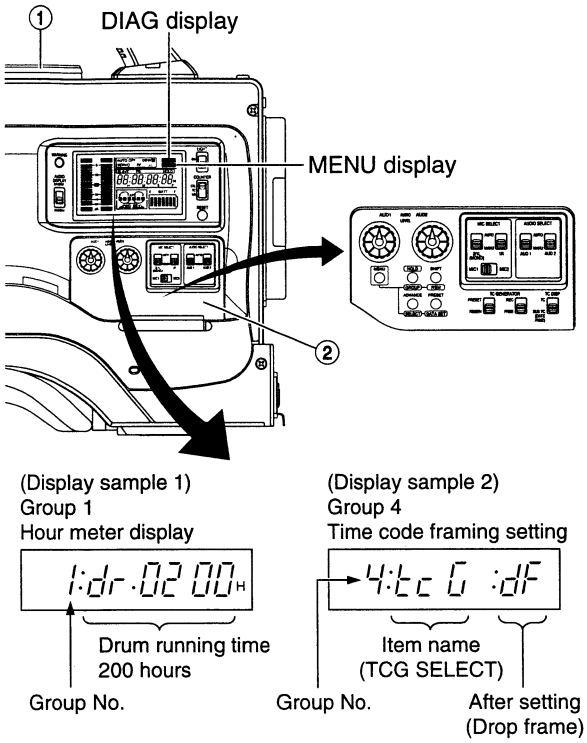

(3) Select a group.
Switch the group display of the counter display by pressing the [GROUP] button.

[Group No. display]

Group 1 :"1" — Hour meter display and individual reset (7 items. See Fig. 1.9.1.)
Group 2 : "2"— Remaining tape (hour:min.) display (1 item. See Fig. 1.9.1.)
Group 3 :"3" — Battery voltage display and alarm/end detection voltage setting (3 items. See Fig. 1.9.4.)
Group 4 :"4" — Setup menu setting (12 items. See 1.9.5.)
Group 5 :"5" — Software version display (3 items. See 1.9.6.)
Group 6 :"10" - "4F" — Self-diagnosis mode (21 items. See 1.9.7.)
Group 7 :"58" - "86" — Adjustment mode (17 items. See 1.9.8.)
Group 8 :"9 " — Warning history display (6 items. See 1.9.9.)
Group 9 :"b " — Service item menu (6 items. See 1.9.10)

(4) Select the item in the group.
Pressing the [ITEM] button allows display of the desired item on the counter display.

1.9.3 How to end the DIAG mode

Pressing the [MENU] button to clear the DIAG mode.

1.9.4 How to set the battery alarm/end detection voltage setting (Group 3)

Alarm/end detection voltage setting can be set with the voltage values while 12 V battery is used. Which means that the alarm/end is detected at a voltage with 1.1 times the display voltage with a 13.2 V battery and 1.2 times with a 14.4 V battery.

Example) Setting with 10.5 V: 13.2 V type→10.5 x 1.1 =11.6 V
14.4 V type→10.5 x 1.2 = 12.6 V

[How to operate]

(1) Initiate the DIAG mode and display the following items. (See the section 1.9.2.)
- Alarm detection voltage display
  3:bA·XXXU (Factory setting: 11.1 V)
- End detection voltage display
  3:bE·XXXU (Factory setting: 10.5 V)

(2) Set the detection voltage by pressing the [SELECT] button.
→ Display data blinks. The display data increase every 0.1 V each time the [SELECT] button is pressed.
→ While the display data is blinking, pressing the [MENU] button allows display of the "Abort" sign for approx. two sec., then the DIAG mode ends without saving the data.
  3:-Abort

(3) Press the [DATA SET] button.
→ The setting data is saved in the EEPROM. During saving, the SAVE display appears for one sec.approx.
  3:-SAvE-

If the alarm detection voltage is set lower than the end detection voltage, the alarm display occurs when the battery voltage falls to the alarm detection voltage. End display appears in several seconds regardless of the end detection voltage.

1.9.5 How to set the setup menu (Group 4)

With a setup menu setting of DIAG mode, menu settings for both users and services are available.

(1) Initiate the DIAG mode and select the setup menu item. (See the section 1.9.2.)
(2) Select the setting values with the [SELECT] button.
(3) Press the [DATA SET] button.
→ The setting data is saved in the EEPROM. During saving, the SAVE display appears for one sec.approx.
  3:-SAvE-

Menu names	Counter displays	Details
TCG DROP/NON-DROP (only U version)	4:tc G :dF :nF	Menu for users (See page 64 of the instruction manual.)
U-BIT SLAVE ON/OFF	4:Et Ub:on :oF	Menu for users (See page 64 of the instruction manual.)
SUB TC DATE STYLE	4:oP Ub:00 :01 :02	Selection of the data order of the SUB TC U-BIT (Year/Month/Day calendar) 00: Year/Month/Day 01: Month/Day/Year 02: Day/Month/Year
PHASE CORRECTION	4:Ph cr:on :oF	Selection whether to execute the phase compensation of TC OUT terminal output on: Execute the phase compensation oF: Not execute the phase compensation
U-BIT BINARY GROUP FLAG	4:Ub Gr:00 :01 :02 :03	Setting of the binary group flag of the user's bits 00: Not appointed as character sets 01: ISO character 02/03: Not specified
AUTO TRACKING	4:At tr:on :oF	Selection whether to operate the auto tracking during the PLAY mode. on: Operate oF: Not operate. At this time, the tracking VR inside the connector box is effective.
BATT. TYPE SELECT	4:bA tt: 12 : 13 : 14	Menu for users (See page 64 of the Instruction manual.)
LONG PAUSE TIME	4:Ln GP:01 :05 :30 :--	"- -" (prohibition of long pause) cannot be set at the menu for users (see page 64 of the Instruction manual).
AUDIO INPUT SELECT (only U version)	4:AS EL:oF :on	Selection for factory use oF: Normal mode DA1 DA2 DA3 DA4 on: Factory use mode AUD1 MIC2 AUD2 MIC1 AUD1 AUD2 MIC1 MIC2
AUDIO LOW CUT SELECT (REAR) (only E version)	4:Lc tA:oF :on :01 :02	Menu for users (See page 64 of the Instruction manual.)
ECC	4:Ec c :on :oF	ON/OFF of the cancellation circuit of the error compensation on: Compensation errors. oF: Non compensation errors.
AUDIO LOW CUT SELECT (FRONT MIC) (only E version)	4:Lc tF:oF :on :01 :02	Menu for users (See page 64 of the Instruction manual.)
DA1 LOW CUT SELECT (only U version)	4:Lc A1:oF :on	Menu for users (See page 64 of the Instruction manual.)
DA2 LOW CUT SELECT (only U version)	4:Lc A2:oF :on	
DA3 LOW CUT SELECT (only U version)	4:Lc A3:oF :on	
DA4 LOW CUT SELECT (only U version)	4:Lc A4:oF :on	
FRONT MIC1 SELECT (only E version)	4:Fr 1 :on :St	Menu for users (See page 64 of the Instruction manual.)
BACK SPACE MODE SELECT	4:bc SP:Pb :EE	Menu for users (See page 64 of the Instruction manual.)

Table 1.9.5 (1) Setup menu

1.9.6 Software version display (Group 5)

These items allow confirmation of software versions in use without removing the outer case of the set. The details of the displays are shown below.

Menu names	Counter display	Board names Symbol No.	Remarks
SYSCON/SERVO version	5:SY X.XX	SS/REP board IC603	PLSC1235-VX-XX
AV micro computer version	5:Au X.XX	MAIN board IC101	PLSC1236-VX-XX
LCD micro computer version	5:Lc X.XX	AUDIO & LCD board IC401	PLSC1237-VX-XX (E Version) PLSC1262-VX-XX (U Version)

Table 1.9.6 (1) Software version display

1.9.7 Self-diagnosis mode (Group 6)

Twenty-one menus are provided in the self-diagnosis mode to check the internal operation of the set. Pressing the [SELECT] button after selecting a menu allows starting of the self-diagnosis.
At this time, the following displays appear on the counter display.

XX: .-- -- Display during the menu selection.
XX:P .YY YY Display during menu execution.
XX:Ed.YY YY Display when menu ends.
XX:Er.YY YY Display when error occurs.
XX:Ab.YY YY Display when menu is aborted.

Data
Menu No.

(1) Detection of servo reference signal

10: .-- --

This menu allows checks if the servo reference signal is being supplied normally to the S/S micro computer.

[How to operate]

During the above a menu is displayed, the result of the diagnosis is displayed when the [SELECT] button is pressed.

- Normal 10:Ed.00 00
- Abnormal 10:Er.00 00

If an error display appears, check if the TSR signals (75 Hz) generated from DCI-P (MAIN board IC206-pin120) is supplied to the S/S micro computer (SS/RFP board IC601-pin67).

(2) Tracking data display

11: .-- --

This menu allows display of the present tracking phase data.

[How to operate]

During the above a menu is displayed, the tracking data (hexadecimal number) is displayed when the [SELECT] button is pressed.

Display sample 11:Ed.05:6F

In case the tracking data during the alignment tape MSHP-X playback is out of the area either the "6097" H - "61C1" or the "0000" H - "0EA8" H, X values may be misadjusted.

(3) Mechanism operation check (without a cassette)

12: .- - - -

This menu is used for checking the mechanism operation.

[How to operate]

With the above display, pressing the [SELECT] button allows the starting of the mechanism automatically without inserting a cassette tape to check if there is any abnormality in the mechanism. The result of the diagnoses is displayed as follows.

- Normal 12:Ed.00 00
- Abnormal 12:Er.0X YZ

In the data area of the error display, the data "X", "Y" and "Z" (hexadecimal number) which indicate abnormal points are displayed. Correspond them to the table below in order to detect any abnormal occurrence points. In the tables, the mark "○" is provided for the points where an abnormality occurs. For example, if "12: ER. 00 40" is displayed, it means that data "Y" is "4", so that you can tell that the abnormality of "Capstan motor does not rotate" has occurred by Table 1.9.7 (2).

Display "X"	0	1	2	3
Unloading failed.			○	○
Loading failed.		○		○

Table 1.9.7 (1) Mechanism operation abnormality display "X"

Display "Y"	0	1	2	3	4	5	6	7
Capstan motor does not rotate.					○	○	○	○
Drum motor does not rotate.			○	○			○	○
Reel brake does not work.		○		○		○		○

Table 1.9.7 (2) Mechanism operation abnormality display "Y"

Display "Z"	0	1	2	3	4	5	6	7	8	9	A	b	c	d	E	F
TU reel does not rotate.									○	○	○	○	○	○	○	○
SUP reel does not rotate.					○	○	○	○					○	○	○	○
Condensation has occurred.			○	○			○	○			○	○			○	○
Tape LED abnormality		○		○		○		○		○		○		○		○

Table 1.9.7 (3) Mechanism operation abnormality display "Z"

(4) Mechanism operation check (with a cassette)

13: .- - - -

This mode is used for checking a mechanism operation.

[How to operate]

During the above displays, inserting a cassette tape allows the start of the mechanism automatically in order to diagnose if there is any abnormality.

- Normal 13:Ed.00 00
- Abnormal 13:Er.00 XY

In the data area of the error display, the data "X" and "Y" (hexadecimal numbers) which indicate abnormal points are displayed. Correspond them to the table below to detect any abnormal occurrence points. In the table below, the mark "○" is provided for the points where an abnormality occurs.

Display "X"	0	1	2	3	8	9	A	b
Unloading failed.					○	○	○	○
Loading failed.			○	○			○	○
TU reel abnormality		○		○		○		○

Table 1.9.7 (4) Mechanism operation abnormality display "X"

Display "Y"	0	2	4	6	8	A	c	E
SUP reel abnormality					○	○	○	○
End sensor abnormality			○	○			○	○
Begin sensor abnormality		○		○		○		○

Table 1.9.7 (5) Mechanism operation abnormality display "Y"

(5) EEPROM writing check

14: .- - - -

This menu allows checks if the data has been written to EEPROM (SS/RFP board IC606) correctly or not.

[How to operate]

During the above display, pressing the [SELECT] button allows a start of the diagnosis and displays the results as follows.

- Normal 14:Ed.00 00
- Abnormal 14:Er.00 00

In case an error display appears, the EEPROM may be damaged.

(6) Switching points check

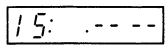

This menu allows us to measure the switching points during playback.

[How to operate]

After pressing the [SELECT] button during the above display, insert a cassette tape in order to initiate the PLAY mode. An S/S micro computer starts measuring the switching points and displays the results of the measured data (hexadecimal numbers) as follows.

- Measured value display 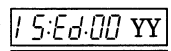
- Error display 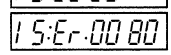 (In the case that measuring was impossible)

The measured data "YY" should be in the area between "0C" H - "F4" H. If it is out of this area or an error display appears, check the switching point auto-adjustment (Menu No. 64) and also if an HID signal (position information of a rotation head) and SPA signal (recording position information of ITI signal on the tape pattern, SS/RFP board IC601-pin56) are correctly supplied to S/S micro computer.

(7) Sync. count check

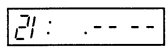

This menu allows us to check if the DCI-P (MAIN board IC206) can read the playback signal data correctly or not.

[How to operate]

After pressing the [SELECT] button during the above display, insert a cassette tape in order to initiate the PLAY mode. The DCI-P starts checking the sync. data playback signals for each head and displays the result as follows.

- Normal 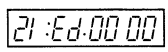
- Abnormal 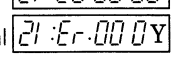

In case the data cannot be detected correctly, an error display as above appears.

Correspond the display data "Y" to the table below in order to find out which head's output has an abnormality.

Display "Y"	0	1	2	3	4	5	6	7	8	9	A	b	c	d	E	F
CH2 Primary head									○	○	○	○	○	○	○	○
CH2 Trailing head					○	○	○	○					○	○	○	○
CH1 Primary head			○	○			○	○			○	○			○	○
CH1 Trailing head		○		○		○		○		○		○		○		○

Table 1.9.7 (6) Sync. count error data

In case the error display appears, there may be some dust on the rotation head or its service life is coming to an end, also the RF equalizer (SS/RFP board IC301, IC401) may be misadjusted or DCI-P (MAIN board IC206) may be damaged.

(8) I²C bus communication check

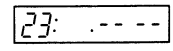

This menu allows us to diagnose if the AV micro computer (MAIN board IC101) communicates correctly with each of the digital process ICs on the MAIN board.

[How to operate]

During the above display, pressing the [SELECT] button allow us to start diagnosis and display results as follows.

- Normal 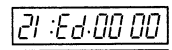
- Abnormal 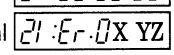

If any communication error occurs, data "X", "Y" and "Z" which indicate the abnormality points are displayed on the above error display. Correspond them to the table below in order to find out in which IC the communication abnormality has occurred.

Display "X"	0	1	2	3	4	5	6	7	8	9	A	b	c	d	E	F
AUDIO-2 (IC702)									○	○	○	○	○	○	○	○
AUDIO-1 (IC700)					○	○	○	○					○	○	○	○
SHUFF (IC224)			○	○			○	○			○	○			○	○
ECC-2 (IC217)		○		○		○		○		○		○		○		○

Table 1.9.7 (7) I²C bus communication error data "X"

Display "Y"	0	4	8	c
ECC-1 (IC216)			○	○
DCI-P (IC206)		○		○

Table 1.9.7 (8) I²C bus communication error data "Y"

Display "Z"	0	1
DCI-R (IC201)		○

Table 1.9.7 (9) I²C bus communication error data "Z"

(9) Tape condition check

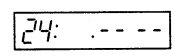

This menu judges the tape playback condition from the numbers of errors detected by DCI-P (MAIN board IC206) during playback and displays the results classified by four different levels.

[How to operate]

During the above display, press the [SELECT] button, then insert a cassette tape to initiate the PLAY mode to display the tape conditions as follows.

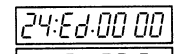 Hardly any errors

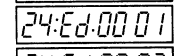 Some errors

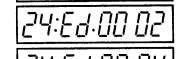 Many errors

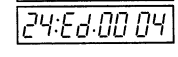 Normal playback is not possible.

If error rate level "4" is displayed, there may be some dust on the rotation head or its service life is coming to an end, The RF equalizer (SS/RFP board IC301, IC401) may be misadjusted or the DCI-P (MAIN board IC206) may be damaged.

(10) Error rate measurement

25: .-- --

This menu displays how many inner errors have occurred at the sync. block during two frames.

[How to operate]

Press the [SELECT] button, then insert a cassette tape to initiate the PLAY mode in order to display the error rate (hexadecimal numbers) as follows.

25:Ed.00 YY

(11) Concealed count

26: .-- --

This menu displays the numbers of error corrections of the video data carried out by the ECC (MAIN board IC216, IC217) per frame.

[How to operate]

Press the [SELECT] button, then insert a cassette tape in order to initiate the PLAY mode. The AV micro computer starts measuring the concealed count values in order to display the result as follows.

26:Ed. YY YY

(12) SW operation, LCD/LED display confirmation

34: .-- --

This menu is used for checking if the OPERATE SW and LED/LCD displays are operating correctly.

[How to operate]

Press the [SELECT] button to initiate this menu. The operation check is available with the following procedures.

- While the FF, REW, STOP, PLAY or EJECT button is pressed, the corresponding LED lights.
- While the [PRESET] button is pressed, all the segments of LCD light.
- While the [RESET] button is pressed, all the segments of the LCD turn off.
- The switch operation can be checked with a display on the COUNTER DISPLAY.

34:P .AB CD

A: [COUNTER] switch setting
2: "UB" side, 1: "TC" side, 0: "CTL" side

B: [TC GENERATOR] switch setting
1: "PRESET" side, 0: "REGEN" side

C: [TC GENERATOR] switch setting
1: "REC" side, 0: "FREE" side

D: [TC DISP] switch setting
1: "TC" side, 0: "SUB TC" side

(13) Tracking VR test

35: .-- --

This menu is used for an operational check of the tracking VR inside a connector box.

[How to perform the operation]

Set the auto tracking setting "4: At tr" of the setup menu to "oF", then select the tracking VR test "35: .-- --". In this condition, pressing the [SELECT] button allows to display

35:P .00 YY

When the tracking VR is turned on, if the display data varies beyond the area between "40" - "C0", the tracking VR is normal.

(14) LTC loop test

3c: .-- --

This menu diagnoses the input/output circuit of the LTC by checking if the LTC reader (AUDIO&LCD board IC401) correctly reads the test signals generated from the LTC generator (AUDIO&LCD board IC401).

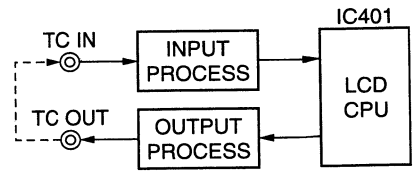

[How to operate]

During the above display, press the [SELECT] button, then carry out the loop connection between the TC IN terminal and the TC OUT terminal.
The results of the diagnostics are displayed as follows.

- During execution 3c:P .00 00 (if the loop connection is now provided, the display will not be changed.)
- Normal 3c:Ed.00 00
- Abnormal 3c:Er.00 00

(15) TC reference signal detection

3E: .-- --

This menu allows to check if any FRP signals (AUDIO&LCD board IC401 - pin64) which are standard for the running of the time code data, are being supplied to the TC generator.

[How to operate]

During the above display, pressing the [SELECT] button allows to start diagnostics and displays the results as follows.

- Normal 3E:Ed.00 00
- Abnormal 3E:Er.00 00

(16) Board connection check

44: .-- --

This menu is not operated because it is dummy.

(17) JVC bus communication check

46: .-- --

This menu allows to diagnose if the S/S micro computer (master CPU) and each slave CPU (AV micro computer, LCD micro computer) are communicating correctly.

[How to operate]

During the above display, pressing the [SELECT] button allows to start the diagnosis and displays the results as follows.

- Normal 46:Ed·00 00
- Abnormal 46:Er·001 X (X : 3 = AV micro computer, 5 = LCD micro computer)

When any communication error occurs, it locates which of the communications with the CPU caused the error and displays the information on the above error display.

(18) RF record current adjustment data display

4C: .-- -- CH1 Leading head
4D: .-- -- CH1 Lagging head
4E: .-- -- CH2 Leading head
4F: .-- -- CH2 Lagging head

This menu is used for confirming the adjustment values set by a recording current auto adjustment.

[Operation]

During the above display, pressing the [SELECT] button allows us to display the adjustment values for each head with hexadecimal numbers.

4C:Ed·00 YY CH1 Leading head adjustment data
4D:Ed·00 YY CH1 Lagging head adjustment data
4E:Ed·00 YY CH2 Leading head adjustment data
4F:Ed·00 YY CH2 Lagging head adjustment data

1.9.8 Adjustment mode (Group 7)

There are two menus which are provided for the adjustment mode; an auto adjustment menu to carry out the adjustment automatically and a setting menu to initiate the adjustment mode. How to execute each menu is explained in the corresponding adjustment item or the table below.

Menu names	Display	VTR operation	Remarks
Search audio x1 playback	50: -- -- (while menu is selected)	Search audio is output during the PLAY mode. It accepts a VHS cassette, then the tape is run with the VHS SP mode speed. However, the picture and the HiFi audio cannot be played back.	2.11.3 A/C head azimuth adjustment 2.11.4 A/C head height adjustment
Capstan FG duty/gain auto adjustment	51: -- -- (while menu is selected)	Adjust the duty ratio of the capstan FG to 50%. Carry out the gain adjustment of the capstan FG. (stop servo adjustment) No operation can be executed during the auto adjustment.	3.4.1 Capstan FG duty adjustment

Table 1.9.8 (1) Adjustment modes-1/3

Menu names	Display	VTR operation	Remarks
Reverse torque adjustment	5F: - - - - (while menu is selected)	It accepts a torque cassette for the VHS. Winding torque adjustment during the running of the REV is available. While the menu is being executed, the tape is always run by a capstan motor drive even if the FF/REW button is pressed. The tape speed of the search REV mode is then fixed to -1X speed.	2.9.2 Reverse torque adjustment
Unloading the torque adjustment	61: - - - - (while menu is selected)	It accepts a torque cassette for the VHS. During the search REV mode, the supply reel is rotated with a winding torque while unloading. While the menu is executed, the tape is always run by a capstan motor drive even if the FF/REW button is pressed. The tape speed of the search REV mode is fixed to -1X speed.	2.9.1 Unloading torque adjustment
PLAY torque adjustment	62: - - - - (while menu is selected)	It accepts a torque cassette for VHS. A winding torque adjustment of the take-up reel during the FWD is available. While the menu is executed, the tape is always run by a capstan motor drive even if the FF/REW button is pressed. The tape speed of the search REV mode is fixed to normal speed.	2.9.3 PLAY torque adjustment
Emergency roll mode	63: - - - - (while menu is selected)	In case abnormal tape slack occurs, it drive the reel motor with low torque to wind up the slacked tape.	Refer to the section "1.7 HOW TO TAKE A CASSETTE OUT IN AN EMERGENCY".
Switching point auto adjustment	64: - - - - (while menu is selected)	The switching point adjustment is carried out automatically.	3.4.3 Playback switching point adjustment
Manually loading/unloading	65: - - - - (while menu is selected) 65:P .00 00 (during playing) 65:Ed.00 00 (end)	The loading and unloading can be carried out without inserting a cassette. If a cassette is already inserted, it eject the cassette, then starts this menu.	[How to operate] Select the menu with the [SELECT] button, then press the button below while pressing the [OPERATE] button. [FF] : Loading [REW] : Unloading
Manual loading motor control	66: - - - - (while menu is selected) 66:P .00 00 (during playing) 66:Ed.00 00 (end)	The loading motor can be rotated manually without inserting a cassette. If a cassette is already inserted, it eject the cassette, then start this menu.	[How to operate] Select the menu with the [SELECT] button, then press the button below while pressing the [OPERATE] button. [FF] : Rotates for 34 ms towards the loading direction [REW] : Rotates for 34 ms towards the unloading

Table 1.9.8 (1) Adjustment modes-2/3

Menu names	Display	VTR operation	Remarks
X value adjustment	67: - - - - (while menu is selected)	Auto tracking becomes OFF. Tracking the VR becomes invalid and playback starts at the tracking preset position.	2.11.5 X value adjustment
Tracking Preset auto adjustment	68: - - - - (while menu is selected)	The tracking is varied and the tracking position where an RF level becomes maximum, is searched automatically.	3.4.2 Tracking preset adjustment
VHS cassette acceptance	69: - - - - (while menu is selected)	It accepts a VHS cassette.	[How to operate] [SELECT]: Play [DATA SET] : End
Linearity measurement	6A: - - - - (while menu is selected)	Linearity measurement mode is initiated with the RS-232C control. Auto tracking becomes OFF and the tracking VR becomes invalid.	2.12 CHECK OF LINEARITY
Tape pass running	6b: - - - - (while menu is selected) 6b:P .000Y (while running is executed) 6b:Ed.00 0F (when the 15 passes are completed) 6b:Er.000Y (Error display)	When a cassette is inserted, it repeats PLAY mode (8 times) and SRH REV mode (7 times) on the same section of the tape (approx. 30 sec.), then eject the tape. While the running is being executed, the number of the executed running is displayed at "Y" with hexadecimal numbers. While the running is being executed, if the [DATA SET] button is pressed or the VTR mode is changed, or a tape end is detected during PLAY, an error message is displayed.	[How to operate] Select the menu by pressing the [SELECT] button, then insert a cassette on which a recording has been done.
RF REC1/4 CLK	6F: - - - - (while menu is selected) 6F:P .000 00 (during recording) 6F:Ed.00 00 (END)	Recording 1/4-divided clock (approx. 12.4MHz)	[How to operate] Select the menu by pressing the [SELECT] button, then record the internal clock.
RF recording current auto adjustment	72: - - - - (while menu is selected)	It varies the recording current value with 8 steps at every 4 times. (approx. 2 sec.) and records the internal oscillation clock (approx. 12.4 MHz). This process is repeated four times. (It takes a little more than four minutes.) Then, it plays back the recorded section automatically and detects the best recording current value out of the output levels for each head.	3.5.6 Recording current adjustment
Battery voltage detection auto adjustment	86: - - - - (while menu is selected)	S/S micro computer (SS/RFP board IC601) measures the voltage at pin 68 and writes the difference between that value and the optimum value as the compensation value of the battery detection circuit on the EEPROM.	3.7.1 Remaining battery defection circuit adjustment

Table 1.9.8 (1) Adjustment modes-3/3

1.9.9 Warning history display

In the menu of this group, the following data regarding the last four warnings occurring can be displayed.

Display at the selected menu	Type of warning information
90:YY- - - -	Warning code (Refer to the section 1.11)
91:YY- - - -	VTR mode when the warning occurred. (Refer to the table 1.9.9 (2).)
92:YY- - - -	VTR mode before the warning occurred. (Refer to the table 1.9.9 (2).)
93:YY- - - -	The last operate button to be pressed when the warning occurred. (Refer to the table 1.9.9.(3).)
94:YY- - - -	Power ON accumulated time [unit: hour] when the warning occurred.
95:YY- - - -	The battery voltage [unit: V] when the warning occurred.

Table 1.9.9 (1) Types of warning information

[How to operate]

(1) Initiate the DIAG mode and select the group 8. (Refer to the section 1.9.2.)
(2) Select the type of warning information with the [ITEM] button.
(3) Select the warning history level with the [SELECT] button.
(4) Pressing the [DATA SET] button allows us to display data regarding the selected information.

[Display example]

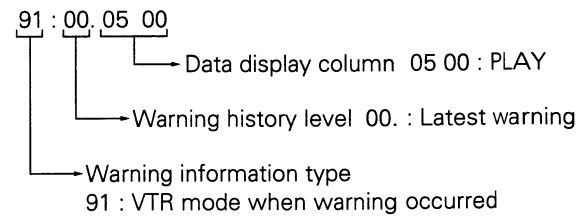

Data	VTR mode	Data	VTR mode	Data	VTR mode
03 00	SEARCH FWD	0d 00	STOP	80 01	REC BACK SPACE
04 00	SEARCH REV	13 00	SKIP FWD	80 02	REC PAUSE
05 00	PLAY	14 00	SKIP REV	80 04	REC PLAY
07 00	NO CASSETTE (EJECT)	19 00	FF	80 10	REC
09 00	EJECT	1A 00	REW	81 01	ASSM BACK SPACE
0A 00	NO CASSETTE (INTAKE END)	16 00	SHORT FF	81 04	ASSM PLAY
0c 00	STAND-BY OFF	1c 00	SHORT REW	92 02	REC LOCK

Table 1.9.9 (2) VTR mode data

Data	Operate button	Data	Operate button	Data	Operate button
30 00	EJECT	33 00	REW	42 00	REC+PAUSE
31 00	STOP	40 00	PLAY	45 00	STANDBY
32 00	FF	41 00	REC+PLAY	46 00	REVIEW

Table 1.9.9 (3) Operate button data

1.9.10 Service item menu (Group 9)

In the menus of this group, the following menus are to carry out the data processing for the setup menu and the hour meter.

Menu selection displays	Functions
b1:SA uE.--	Save the setting data for the setup menu.
b2:Lo Ad.--	Set the setup menu to the setting saved at "b1:SA uE.--".
b3: In it.--	Set the setup menu to the factory set.
b4:Er AS.--	Delete the warning history data.
b7:Hr cL.--	(For factory use only)
b8:cn cL.--	(For factory use only)

Table 1.9.10 (1) Service items menu

[How to operate]

(1) Initiate the DIAG mode and select group 9. (Refer to the section 1.9.2.)
(2) Select the [ITEM] button on the menu.
(3) Pressing the [DATA SET] button allows execution. While the data is being written in the EEPROM, the "on" message is displayed for approx. one sec.

[Display example]

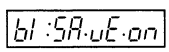

1.10 HOW TO DETECT THE ALARM

The DY-90 provides alarm display functions in order to inform users of the remaining condition of the tape and battery. This section explains how to detect them. Please refer to page 81 in the INSTRUCTIONS regarding the alarm display details.

Items	Conditions	Detecting methods
Servo lock error "SERVO"	At the IN point of the continuous recording, this occurs if a drum rotation phase error happens for more than 450 micro s or if the capstan motor rotation speed varies more than 6%.	S/S micro computer (SS/RFP board IC601) detects the drum rotation phase from the phase difference between the TSR signal and the ID signal, and the capstan motor speed from the frequency of the CAP x 2FG signal.
Head clog "RF"	This occurs when the RF signal is lacking for one second during the back space operation. (However, it also enters the alarm mode if the signal is lacking for 0.5 second just before ending the back space operation.)	It judges that the RF signal is lacking when the RF level detection circuit output (SS/RFP board IC615 - pin17) becomes lower than 0.27 V.
Lithium battery fault "Li"	This occurs when a lithium battery is exhausted or is not installed.	When the input voltage (AUDIO&LCD board IC 422 - pin3) of the battery backup switching circuit becomes lower than 2.7 V, the signal at the PREEND terminal (pin2) is at a low level. This results in the Alarm mode being entered.
Tape remaining time	This occurs when the remaining tape is less than 2 min. during recording or the recording pause function, or when the tape end is detected during recording.	S/S micro computer (SS/RFP board IC601) detects the tape remaining time from the diameter of the supply reel and the tape end from the end sensor output.
Battery remaining time 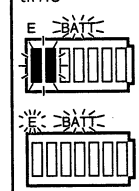	This occurs when the battery capacity is insufficient.	The S/S micro computer (SS/RFP board IC601) detects the battery voltage from the voltage at pin68. When 12 V battery is used: Approx. 1.19 V When 13 V battery is used: Approx. 1.84 V When 14 V battery is used: Approx. 2.43 V (Alarm detection voltage setting: at 11.1 V)

Table 1.10 (1) How to detect the alarms

1.11 ERROR CODES

The DY-90 diagnoses the causes of malfunctions and displays the error codes. The procedures of each error detection are explained below.

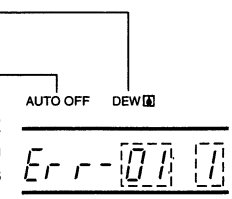

- Dew condensation indicator: Lights when error code is "02:1".
- Auto-OFF indicator: Lights depending on the error codes. When this indicator lights, the VCR will automatically stop the operation or eject the cassette, and VCR does not any operation.

01 : 1 Disconnection or short circuit of LEDs for leader tape detection

- VTR operation: This ejects a cassette. If a cassette is not inserted, one cannot be accepted until the warning is released.
- [AUTO OFF] display in the LCD: Not lit.
- Causes: Disconnection of the tape LED
- How to detect: When the IC601 - pin75 (normally approx. 1.1 V) becomes 250 ms or more and 3 V or more or 0.5 V or less.

02 : 1 Condensation

- VTR operation: It enters the AUTO OFF mode. When a cassette is not inserted, the drum motor starts rotation. When the condensation is cleared, the warning is released automatically and normal operation will start.
- [AUTO OFF] display in the LCD: Lit.
- Causes: Condensation or a malfunction of the DEW sensor
- How to detect: When the DEW sensor output (IC601 - pin73) becomes 3 V or more, it enters the warning mode. When it becomes 2 V or less, the warning is released.

32 : 1 The loading cannot be completed

- VTR operation: It ejects a cassette. When a cassette is inserted again and the loading is completed, the warning is released.
- [AUTO OFF] display in the LCD: Not lit.
- Causes: Malfunction of a mode sensor, a loading motor, an MDA circuit (IC623) or a loading mechanism.
  An inferior of a cassette tape.
- How to detect: The loading cannot be completed within eight seconds when it checks the mode sensor output (IC602 - pin19, 20, 21).

32 : 2 Tape slack during loading

- VTR operation: It ejects a cassette. When a cassette is inserted again and the loading is completed, the warning is released.
- [AUTO OFF] display in the LCD: Not lit.
- Causes: Malfunction of a loading mechanism (Stack of a guide roller)
- How to detect: When the 800 SP reel FG (IC601 - pin62) pulses (= 20 rotation) or more are output during the loading.

33 : 1 Unloading cannot be completed

- VTR operation: It enters the AUTO OFF mode.
- [AUTO OFF] display in the LCD: Lit.
- Causes: Malfunction of a mode sensor, a loading motor, an MDA circuit (IC623) or a loading mechanism.
  An inferior of a cassette tape.
- How to detect: The unloading cannot be completed within eight seconds when it checks the mode sensor output (IC602 - pin19, 20, 21).

56 : 3 SP reel over run due to a tape breakage

- VTR operation: It ejects a cassette. When a cassette is inserted again and the loading is completed, the warning is released.
- [AUTO OFF] display in the LCD: Not lit.
- Causes: Tape breakage due to abnormal tension, insertion of a damaged tape or scratches on the mechanism running parts.
  Abnormal tape winding in a cassette.
- How to detect: When the SP reel FG (IC601-pin 62) becomes a high frequency exceeding the specific limit for 3 seconds or more during the capstan REV mode.

56 : 4 TU reel over run due to tape breakage

- VTR operation: It ejects a cassette. When a cassette is inserted again and the loading is completed, the warning is released.
- [AUTO OFF] display in the LCD: Not lit.
- Causes: Refer to the error code "56 : 3".
- How to detect: When the TU reel FG (IC601-pin 63) becomes a high frequency exceeding the specific limit for 3 seconds or more during the capstan FWD mode.

56 : 5 The simultaneous detection of begin and end of the tape due to a tape breakage

- VTR operation: It ejects a cassette. When a cassette is inserted again and the loading is completed, the warning is released.
- [AUTO OFF] display in the LCD: Not lit.
- Causes: Tape breakage due to abnormal tension, insertion of a damaged tape or scratches on the mechanism running parts.
  A malfunction of the sensor may cause this error due to an exposure to sunlight or incandescence when the unit is used without an outer case.
- How to detect: When both the tape begin sensor (IC601 - pin77) and the tape end sensor (IC601 - pin76) outputs are of a low level during loading.

56 : 6 Tape breakage during unloading

- VTR operation: It ejects a cassette. When a cassette is inserted again and the loading is completed, the warning is released.
- [AUTO OFF] display in the LCD: Not lit.
- Causes: Tape breakage due to abnormal tension, insertion of a damaged tape or scratches on the mechanism running parts.
- How to detect: When the 1200 SP reel FG (IC601 - pin62) pulses (= 30 rotation) or more are output during unloading.

56 : 8 Tape breakage during loading

- VTR operation: It ejects a cassette. When a cassette is inserted again and the loading is completed, the warning is released.
- [AUTO OFF] display in the LCD: Not lit.
- Causes: Refer to the error code "56 : 6".
- How to detect: When only the 20 SP reel FG (IC601 - pin62) pulses (= 1/2 rotation) or less are output during loading.

57 : 1 Short REW cannot be completed

- VTR operation: It ejects a cassette. When a cassette is inserted again and the loading is completed, the warning is released.
- [AUTO OFF] display in the LCD: Not lit.
- Causes: Tape breakage due to abnormal tension, insertion of a damaged tape or scratches on the mechanism running parts.
  A malfunction of the sensor may cause this error due to an exposure to sunlight or incandescence when the unit is used without an outer case.
  Malfunction of the tape end sensor
- How to detect: The tape end sensor output (IC601 - pin76) stays at a low level even when the 100 SP reel FG (IC601 - pin62) pulses (= 2.5 rotations) or more are output in the Short REW mode.
  (Short REW mode: When it detects the tape end soon after a cassette is inserted, it rewinds the tape equivalent to 2.5 rotations of the SP reel with approx. 5x-speed. This operation is called a Short REW mode.)

57 : 2 Skip REV cannot be completed

- VTR operation: It ejects a cassette. When a cassette is inserted again and the loading is completed, the warning is released.
- [AUTO OFF] display in the LCD: Not lit.
- Causes: Refer to the error code "57 : 1".
- How to detect: The tape end sensor output (IC601 - pin76) stays at a low level when the SP reel is rotated for five seconds or more in the Skip REV mode.
  (Skip REV mode: When it detects the tape end at the loading end, it rewinds a leader tape at -1X speed. This operation is called a Skip REV mode.)

57 : 4 Tape end detection during REV running

- VTR operation: It ejects a cassette. When a cassette is inserted again and the loading is completed, the warning is released.
- [AUTO OFF] display in the LCD: Not lit.
- Causes: Refer to the error code "57 : 1".
- How to detect: The tape end sensor output (IC601 - pin76) becomes low level when a tape is wound in the REV direction.

58 : 1 Short FF cannot be completed

- VTR operation: It ejects a cassette. When a cassette is inserted again and the loading is completed, the warning is released.
- [AUTO OFF] display in the LCD: Not lit.
- Causes: Tape breakage due to abnormal tension, insertion of a damaged tape or scratches on the mechanism running parts.
  A malfunction of the sensor may cause this error due to an exposure to sunlight or incandescence when the unit is used without an outer case.
  Malfunction of tape begin sensor
- How to detect: The tape begin sensor output (IC601 - pin77) stays at a low level even when the TU reel is rotated for three seconds and the 50 TU reel FG pulses (= a little more than one rotation) are output in the Short FF mode.
  (Short FF mode: When it detects a tape beginning soon after a cassette is inserted, it first forwards a tape equivalent to the leader tape with approx. 5x-speed. This operation is called a Short FF mode.)

58 : 2 Skip FWD cannot be completed

- VTR operation: It ejects a cassette. When a cassette is inserted again and the loading is completed, the warning is released.
- [AUTO OFF] display in the LCD: Not lit.
- Causes: Refer to the error code "58 : 1".
- How to detect: The tape begin sensor output (IC601 - pin77) stays at a low level when the SP reel is rotated for five seconds or more in the Skip FWD mode.
  (Skip FWD mode: When it detects a tape begin at the loading end, it first forwards a reader tape at normal speed. This operation is called a Skip FWD mode.)

58 : 4 Tape begin detection during FWD running

- VTR operation: It ejects a cassette. When a cassette is inserted again and the loading is completed, the warning is released.
- [AUTO OFF] display in the LCD: Not lit.
- Causes: Refer to the error code "58 : 1".
- How to detect: The tape begin sensor output (IC601 - pin77) becomes low level when a tape is wound to the FWD direction.

70 : 1 Abnormal rotation of a drum motor

- VTR operation: It enter the AUTO OFF mode.
- [AUTO OFF] display in the LCD: Lit. (However, it does not light during loading).
- Causes: Malfunction of a drum motor inside a drum assembly or an MDA circuit.
  Disconnection of a drum assembly.
  Malfunction of a switching regulator circuit (SS/RFP board IC901)
- How to detect: The drum FG (IC601 - pin65) cannot be detected for two seconds or more in the correct drum motor rotation mode.

71 : 1 Abnormal rotation of a capstan motor

- VTR operation: It enters the AUTO OFF mode.
- [AUTO OFF] display in the LCD: Lit.
- Causes: Malfunction of a capstan motor or an MDA circuit inside a capstan motor assembly.
  Disconnection of a capstan motor assembly.
  Malfunction of a switching regulator circuit (SS/RFP board IC901)
- How to detect: Any capstan FG (IC601 - pin 64) pulse is not output for one second or more in the capstan drive mode (PLAY, REC, SEARCH FWD/REV).

72 : 1 Tape is slack at the tape supply side during the capstan drive mode

- VTR operation: It enters the AUTO OFF mode.
- [AUTO OFF] display in the LCD: Lit.
- Causes: Malfunction of a reel motor or a MDA circuit (SS/RFP board IC809, Q809 - Q811).
  Disconnection of the reel motor assembly.
  Malfunction of the switching regulator circuit (SS/RFP board IC901).
  Failure of a reel idler.
- How to detect: Any SP reel FG (IC601 - pin62) pulse is not output while the 6912 capstan FG (IC601 - pin64) pulses (= 4.8 rotation) are generated in the capstan drive mode (PLAY, REC. SEARCH FWD/REV).

72 : 4 SP reel overrun when a cassette is not inserted

- VTR operation: It enters the AUTO OFF mode.
- [AUTO OFF] display in the LCD: Lights.
- Causes: Wrong detection of reel FG because of the interference of pulses.
  Malfunction of reel MDA circuit (SS/RFP board IC809, Q809 – Q811).
- How to detect: When the SP reel FG (IC601 - pin 62) becomes a high frequency exceeding the specific limit for 3 seconds or more without inserting a cassette.

72 : 5 SP reel does not rotate during unloading

- VTR operation: It enters the AUTO OFF mode.
- [AUTO OFF] display in the LCD: Lights.
- Causes: Refer to the error code "72 : 1".
- How to detect: Only 20 SP reel FG (IC601 - pin62) pulses (= 1/2 rotation) are output during unloading.

72 : 7 SP reel does not rotate during Short REW

- VTR operation: It ejects a cassette. When a cassette is inserted again and the loading is completed, the warning is released.
- [AUTO OFF] display in the LCD: Not lit.
- Causes: Refer to the error code "72 : 1".
- How to detect: Only 100 SP reel FG (IC601 - pin62) pulses (= 2.5 rotation) or less are output within five seconds during the Short REW mode.
  (Short REW mode: When it detects the tape end soon after a cassette is inserted, it rewinds the tape equivalent to 2.5 rotations of an SP reel with approx. 5x-speed. This operation is called a Short REW mode.)

73 : 1 Tape slack at the take-up side during the capstan drive mode

- VTR operation: It enters the AUTO OFF mode.
- [AUTO OFF] display in the LCD: Lights.
- Causes: Refer to the error code "72 : 1".
- How to detect: Any TU reel FG (IC601 - pin63) pulse is not output while the 6912 capstan FG (IC601 - pin 64) pulses (= 4.8 rotation) are generated in the capstan drive mode (PLAY, REC, SEARCH FWD/REV).

73 : 4 TU reel overrun without a cassette insertion

- VTR operation: It enters the AUTO OFF mode.
- [AUTO OFF] display in the LCD: Lights.
- Causes: Refer to the error code "72 : 4".
- How to detect: TU reel overruns without inserting a cassette, and the 40 TU reel FG (IC601 - pin63) pulses (= one rotation) or more are output in a second.

73 : 7 SP reel does not rotate during Short FF

- VTR operation: It ejects a cassette. When a cassette is inserted again and the loading is completed, the warning is released.
- [AUTO OFF] display in the LCD: Not lit.
- Causes: Refer to the error code "72 : 1".
- How to detect: The tape begin sensor output (IC601 - pin77) stays at a low level even if the TU reel is rotated for three seconds and the 50 TU reel FG pulses (= a little more than one rotation) or less are output in the Short FF mode.
  (Short FF mode: When it detects a tape beginning soon after a cassette is inserted, it first forwards the tape equivalent to the leader tape with approx. 5x-speed. This operation is called a Short FF mode.)

1.12 EEPROM (VTR)

IC606 on the SS/RFP board is an EEPROM which can erase and write electrically and stores the following data regarding DIAG mode.

Stored data	In EEPROM replacement
[Group 1] Data of hour meter	All data will be reset.
[Group 3] Setting data of the battery alarm/end detection voltage	Returns to the factory setting
[Group 4] Setting data of setup menu (Including menus for users)	Returns to the factory setting
[Group 7] Adjusted data set at the Adjustment mode	Returns to the factory setting
[Group 8] Data regarding to the Warning history	All data will be deleted.
[Group 9] Setting data of the setup menu saved at the DIAG menu "b1"	All data will be deleted.
Model name, serial No. (only to be used at the factory)	All data will be deleted.

Table 1.12 (1) EEPROM stored data

When the EEPROM is replaced, the following adjustment data for the group 7 return to the factory setting applies. Make sure to readjust them again.

(1) DIAG menu No. 5d: Capstan FG duty/gain auto adjustment
(2) DIAG menu No. 5F: Reverse torque adjustment
(3) DIAG menu No. 61: Unloading torque adjustment
(4) DIAG menu No. 62: PLAY torque adjustment
(5) DIAG menu No. 64: Switching point auto adjustment
(6) DIAG menu No. 68: Tracking preset auto adjustment
(7) DIAG menu No. 72: RF record current auto adjustment
(8) DIAG menu No. 86: Battery voltage detection auto adjustment

1.13 LITHIUM BATTERY

DY-90 employs a lithium battery (nominal voltage: 3 V) for the back up of the LCD micro computer. The data to be backed up is explained below.

(1) Time code generator data (With free run mode, it keeps on counting during the execution of back up)
(2) Date/Time data for SUB TC
(3) Continuous recording IN point data
(4) CTL counter data

IC422 on the AUDIO & LCD board performs switching to a lithium battery for backup.
This IC switches the power supply of the LCD micro computer to a lithium battery when the main voltage becomes 4.7 V or less. At this time, IC422 switches the "CS" output to low level, the LCD micro computer switches the clock oscillator to X402 and it will be operated with the sleep mode. Also, the IC422 detects the voltage of the lithium battery. When the voltage become 2.7 V or less, it switches the "PREEND" output to low level, then displays the alarm "Li" on the display.

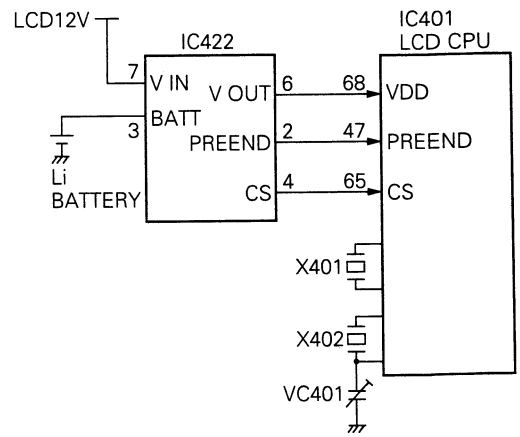

Fig. 1-13-1 Back up circuit

1.14 OPERATIONS OF SWITCHES AND SENSORS

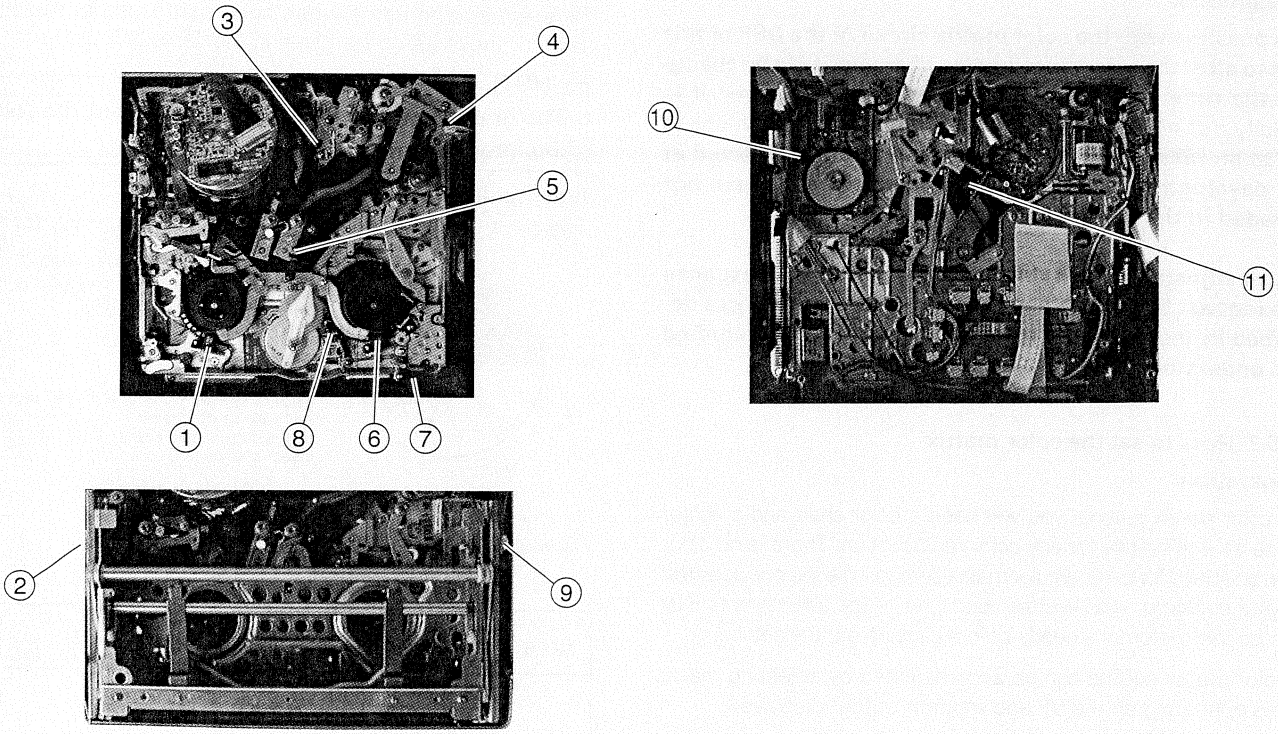

Fig. 1-14-1 Switches and sensors layout

① **Supply reel FG**
40 pulses are output during a cycle of the reel disk.

② **End sensor**
This detects the tape end.

③ **Dew (condensation) sensor**
This detects condensation.

⑤ **After loading sensor**
This detects the mechanism positions together with the mode sensor ⑪ .

⑥ **Tape LED**
This illuminates in order to detect the tape end and beginning.

⑦ **Takeup reel FG**
This detects the rotation of a takeup reel.
40 pulses are output during a cycle of the reel disk.

⑦ **Cassette switch**
Three switches are built in.
- Outside switch : It detects pits for mis-erase prevention.
- Center switch : It detects a digital S cassette.
- Inside switch : Not used.

⑧ **Housing lock switch**
Detects the opening and closing of a cassette housing.

⑨ **Begin sensor**
Detects a tape beginning.

⑩ **Capstan MR**
Generates sine waves with a frequency proportional to the rotation speed with a 2-phase output rotation sensor using MR elements.

⑪ **Mode sensor**
Detects mechanism positions and outputs three different signals as explained in Fig. 1.14.2.

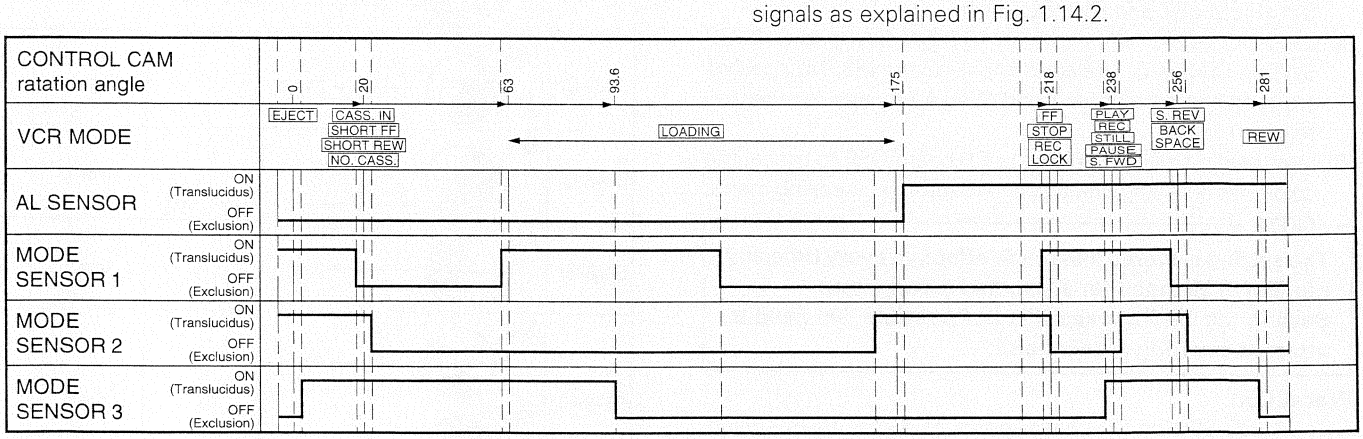

Fig. 1-14-2 Functions of Mode/AL sensors

1.15 How to adjust the color matrix setting

Precautions:

It is possible with the color matrix circuit in the DSP of this unit to alter the color reproduction characteristics by changing the nine different parameter settings. However, it is usually not necessary to change them because each one is set to an initial value which has been carefully selected at the development stage. Such parameter changes are not included in the normal electrical adjustment items.

If such adjustments are still necessary, perhaps in response to a request by a customer, the adjustment procedures described in the subsequent sections should be first studied and understood before being carried out.

1.15.1 How to set the color matrix

Preparation

For color matrix setting, you will need a color chart and a vector scope as a reference for any color reproduction. There is no color chart specified for use in a color matrix setting. Use the one selected by your customer who wishes you to make the adjustment. Fully discuss the customer's needs before carrying out the setting.

A color matrix setting can be accomplished by selecting menu items appearing on the VF and monitor output displays.

MODE	:	M3	M2	M1	DATA
R±(R-G)	:	※	※	※	※
R±(R-B)	:	※	※	※	※
G+(G-R)	:	X	※	※	※
G–(G-R)	:	※	X	※	※
G+(G-B)	:	X	※	※	※
G–(G-B)	:	※	X	※	※
B+(B-G)	:	X	※	※	※
B–(B-G)	:	※	X	※	※
B±(B-R)	:	※	※	※	※

Fig. 1-15-1 Color matrix adjustment display

Follow the steps given below to enable setting.

(1) Remove the right-hand side cover (See 1.3.1)
(2) Turn the dip switch S1-6 on the CP board to ON, and the color matrix setting menu will appear on the viewfinder and monitor output displays.
(3) Move the cursor (blinking character) to the desired item with S11 (ITEM SW) and S12 (SET SW).
(4) Carry out adjustments with S9 (DOWN SW) and S10 (UP SW) on CP board. The adjustment values M3, M2 and M1 are represented by 0 or 1 and "DATA" by any number between 0 and 31.
(5) Turn the dip switch S1-6 on the CP board OFF to cancel the color matrix setting menu and to resume the opening menu.

NOTE

The setting is stored and made effective every time any number is changed for a selected setting item.
Setting the item marked X is not possible (No need to attempt a setting of this item).

Precaution

S13 (MENU SW) on CP board serves as a data reset switch. Pressing this switch during setting causes all the data entered to be cleared, resetting to the initial values.

1.15.2 Details of the individual setting items

9 parameters can be used, as described above, to change 12 different setting items when color matrix setting. Setting details for these items are given in the Table below.

NOTE

The graphic models in the Table represent the following information.

(Example)

The chart below shows an image display on the vector scope.

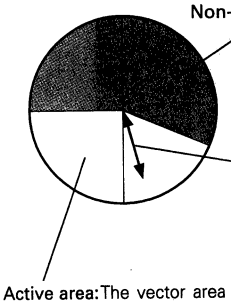

Non-active area : The vector area where the setting is not changeable for the selected item.

The direction in which color signals increase or decrease:
Increasing or decreasing direction to be selected under M1.

{ M1 = 0 : Increasing
{ M1 = 1 : Decreasing

Active area: The vector area where the setting is changeable for the selected item (the area which is selectable under M3 or M2 in some items).

MODE	Graphical representation in the ACTIVE area	M3 0 : Active 1 : Inactive	M2 0 : Active 1 : Inactive	M1 0 : Increase 1 : Decrease	DATA 0 – 31
R±(R-G)	M3 → 0 or 1 M2 → 0 or 1			0 or 1	※
R±(R-B)	M3 → 0 or 1 M2 → 0 or 1			0 or 1	※
G+(G-R)	M2 → 0 or 1	×		0 or 1	※
G–(G-R)	M3 → 0 or 1		×	0 or 1	※
G+(G-B)	M2 → 0 or 1	×		0 or 1	※
G–(G-B)	M3 → 0 or 1		×	0 or 1	※
B+(B-G)	M2 → 0 or 1	×		0 or 1	※
B–(B-G)	M3 → 0 or 1		×	0 or 1	※
B±(B-R)	M3 → 0 or 1 M3 → 0 or 1			0 or 1	※

Table 1-15-1

SECTION 2
MECHANISM ADJUSTMENTS

2.1 MECHANISM ADJUSTMENT FLOWCHART

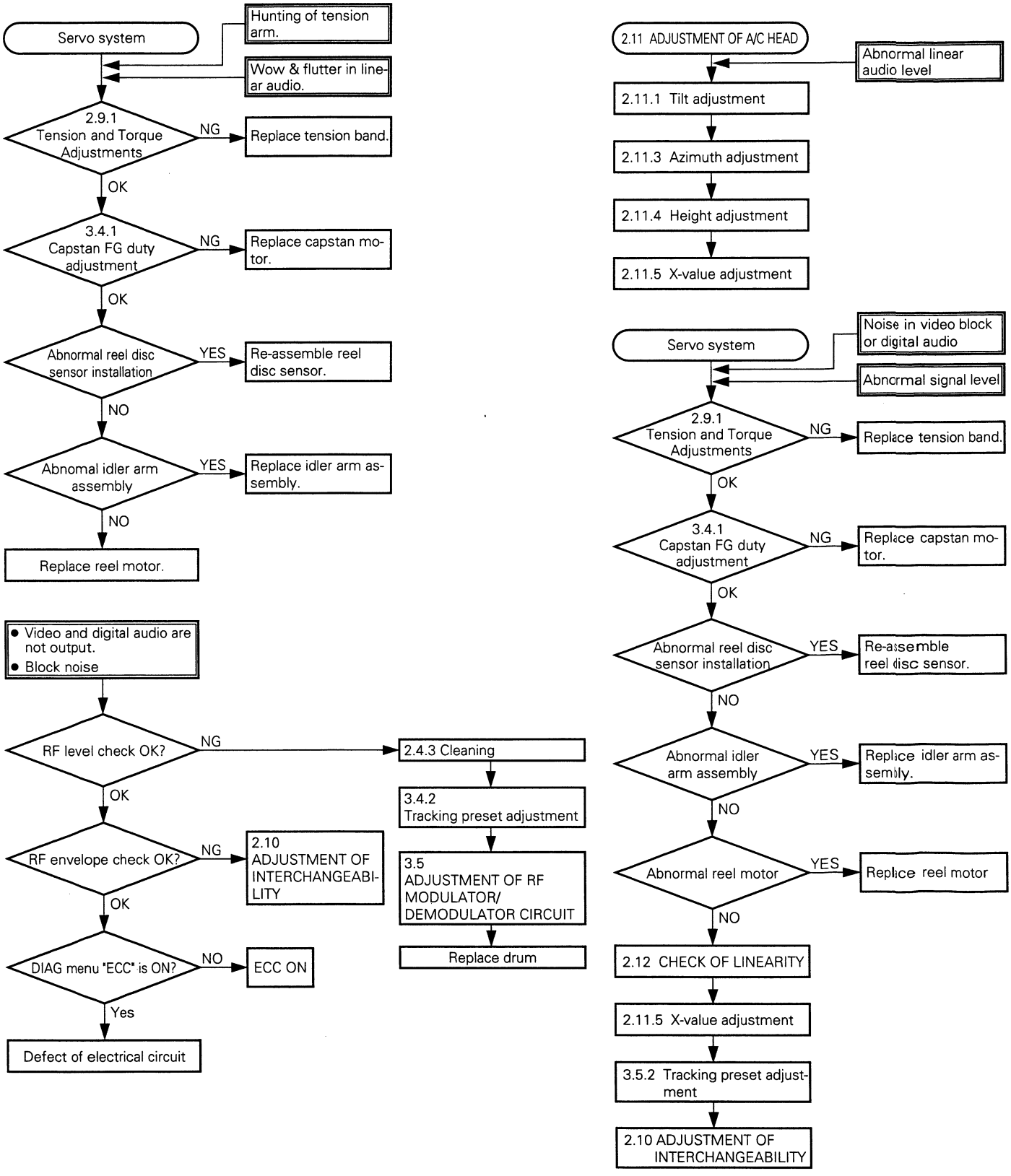

2.2 REQUIRED MEASURING INSTRUMENTS FOR ADJUSTMENTS, STANDARD SETUP

2.2.1 Required measuring instruments for adjustments

Instrument	Condition
Oscilloscope	Capable of measuring 100 MHz or higher bands and calibrated.
Digital voltmeter	Input impedance 10 MΩ or more, and calibrated.
Audio tester	Must be calibrated.

2.2.2 Instruments

1	12 V DC power supply (AA-G10)
	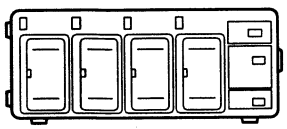 DC regulated power supply (output current 3 A or more)
2	Alignment tape
	See the subsection "2.3.3 Specifications of alignment tapes".
3	Digital S tape
	For use in recording the signal and playback. (DS-104)
4	Cassette torque meters
	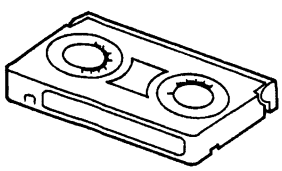 PUJ42881, PUJ42881B (VHS tape should be wound around the reels.)
5	Parallel check plate
	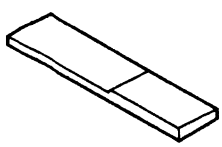 PGJ40767-2 or PGJ04035 (0.05 mm) or PUJ50204 (0.1 mm) or PGJ04039 (0.15 mm) (Only use flat side)
6	Hexdriver
	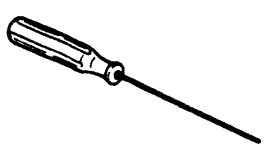 PGJ04034 (2 mm)
7	Linearity check tool
	Linearity checker: KLJ0171 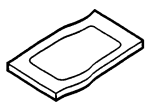 ANALOG I/O PC card (PCMCIA card TYPE II) With software and probe. RS-232C cable: KLJ0123-2 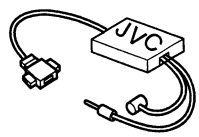

2.2.3 General tools for mechanism adjustments

- Nut driver (5.5 mm)
- Tapered nut driver (PUJ50637)
- Hex. wrenches (0.9 mm, 1.27 mm, 2 mm)
- Phillips screwdrivers (4 mm, 2.6 mm, 2 mm)
  3mm : PGJ04037
  2.6mm : PGJ04038
- Flat-blade screwdriver
- Precision screwdriver
- Torque driver
- VHS tape (NTSC T-120/PAL T-180)
- DIGITAL S tape (DS104)

2.2.4 Procedure to activate DIAG mode

1) While holding the SELECT button depressed, press and hold the MENU button for more than 3 seconds.
2) Press the GROUP button to select group 7 (from "5B: " to "86: ").
3) Press the ITEM button to select the specified menu.
4) Press the SELECT button to execute the item.
   See sub section "1.3.2" for details.

2.3 BEFORE PROCEEDING TO ADJUSTMENT

2.3.1 Precautions

1) Before using a soldering iron, be sure to unplug the power cord from the power supply outlet.
2) When removing a connector, do not pull the wire section but grasp the plug section.
3) In cases of trouble, do not turn adjustment points and potentiometers before the defective point is identified.
4) Remove the top and side covers before making any mechanism adjustments.
5) Each roller should be replaced independently of the replacement operations for other rollers, and the transport system should be checked every time after a roller has been replaced.
6) Before electrical adjustments, be sure to turn on the unit and leave it on for at least 10 minutes or more.
7) The oscilloscope probe should be a 10:1 probe unless otherwise specified.

2.3.2 Test point layout for measuring and tracking VR

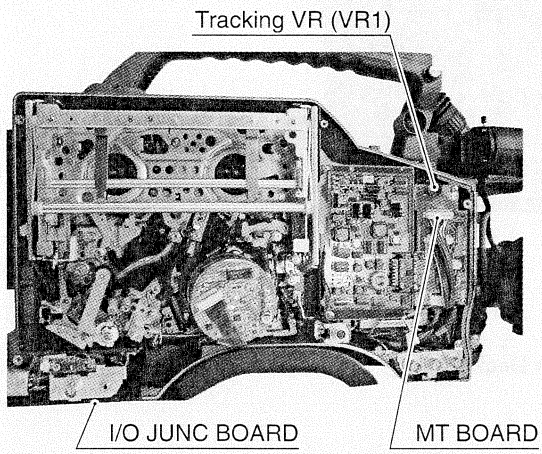

Fig. 2-3-1

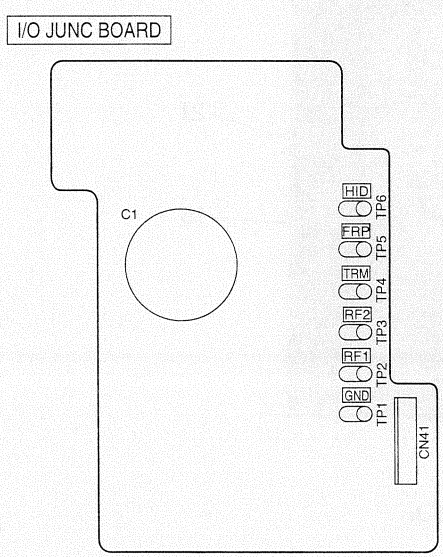

Fig. 2-3-2

2.3.3 Specifications of alignment tape

MHP: for U-ver.
(Stairstep segment of MH-1 tape is substitutable)

Video Signal	Audio Signal	Time (min.)	Applications
VHP (SP mode) stairstep	7 kHz (guard band recording)	20	A/C head azimuth adjustment.

MHPE: for E-ver.
(Stairstep segment of MH-2 tape is substitutable)

Video Signal	Audio Signal	Time (min.)	Applications
VHS (SP mode) Stairstep	6 kHz	20	For adjustment of A/C head azimuth.

MBA-3; for U-ver.
(Tape that MHA-3 is changed just in the name.)

Video Signal	Audio Signal	Time (min.)	Applications
–	1 kHz (guard band recording)	–	A/C head height adjustment

MBAE-3; for E-ver.
(Tape that MHAE-3 is changed just in the name.)

Video Signal	Audio Signal	Time (min.)	Applications
–	1 kHz (guard band recording)	–	For adjustment of A/C head azimuth.

MSHP

Video Signal	Audio Signal	Time (min.)	Applications
Sine wave	–	50	Interchangeability adjustment

MSHP-X

Video Signal	Audio Signal	Time (min.)	Applications
Color bar (1 track per frame does not contain video.)	–	50	X-value adjustment, tracking preset adjustment.

2.4 MAINTENANCE AND INSPECTION OF MAIN PARTS

Periodical inspection and maintenance are the prerequisite for ensuring the original performance and reliability of the set. Table 2-4-1 (check and maintenance table for major parts) is compiled as a standard of main parts replacement on the assumption that the set is used in ordinary conditions. Therefore, replacing periods indicated in the table greatly differ depending on actual use and environmental conditions. Moreover, if the set undergoes inspection and maintenance irregularly or is left without inspection and maintenance, it not only shortens the replacement period considerably but also affects other parts and the whole function.

Rubber parts require careful attention because they are apt to deform or deteriorate if the set is hardly used or left in bad environment.

The life time of the drum depends on use and environmental conditions.

2.4.1 Main Parts Layout

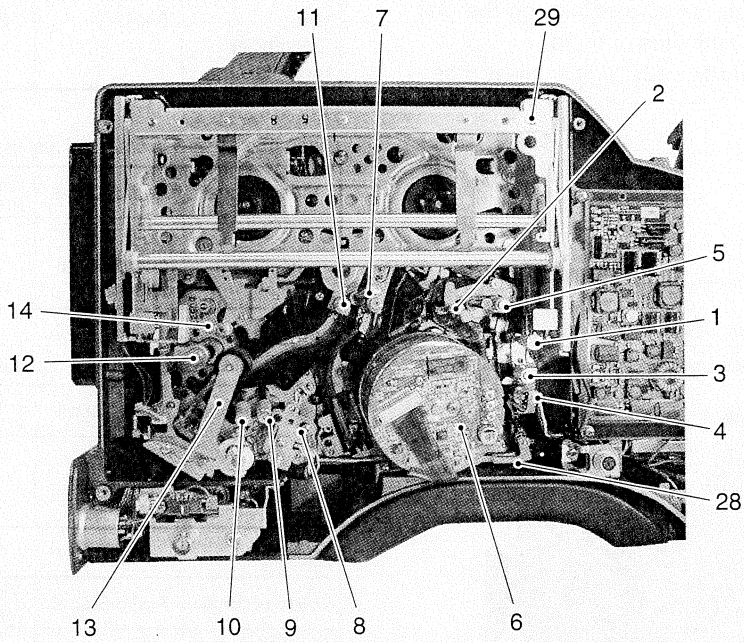

Fig. 2-4-1 Top Side of Deck

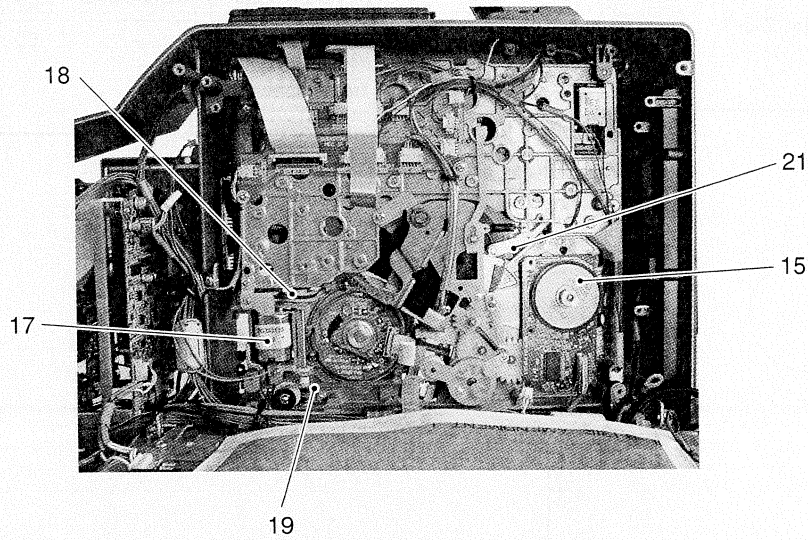

Fig. 2-4-2 Back Side of Deck

2.4.2 Check and maintenance table

Table 2-4-1 Check and maintenance table for major parts

★: Cleaning ○: Replacing if required Cleaning if it is not replaced ●: Replacing

Category	No.	Part Name	Reference section of this manual	Standard service period (Operating Hours) (See Note) A	B	C	Symbol No. of part and page which is appears in	Remark
Tape transport system	1	1st guide roller	2.7.2				M 4 No. 91	
	2	Supply tension arm assembly	2.7.4	★		●	M 4 No. 81	Including supply tension band
	3	Full erase head guide roller	2.7.3				M 4 No. 108	
	4	Full erase head assembly	2.7.17	○		●	M 4 No. 111	Including tape scraper
	5	Supply pole base assembly	2.7.5	★		●	M 4 No. 74	
	6	Drum assembly	2.5.2	●			M 3 No. 59	
	7	Take-up guide roller	2.7.11	★		●	M 4 No. 68	
	8	A/C head assembly	2.7.7	○		●	M 4 No. 102	
	9	A/D head guide roller	2.7.8	★		●	M 4 No. 92	
	10	Middle guide roller	2.7.9	★		●	M 4 No. 110	
	11	Draw pole base assembly	2.7.11	★		●	M 4 No. 70	
	12	Capstan shaft	2.4.5	★			–	
	13	Pinch roller assembly	2.7.6	★	●		M 4 No. 99	
	14	Take-up tension arm assembly	2.7.10	★		●	M 4 No. 84	Including Take-up tension band
Drive system	15	Capstan motor assembly	2.7.13				M 4 No. 27	
	16	Reel motor assembly	2.7.14	○	○	●	M 4 No. 43	Including belt
	17	Mode motor assembly	2.7.15				M 4 No. 21	
	18	Belt	2.6.3	★	●		M 4 No. 21E	
	19	Timing belt	2.7.12				M 4 No. 25	
	20	Supply rubber tire	2.7.18	★		●	M 4 No. 58A	
	21	Take-up rubber tire	2.7.18				M 4 No. 59A	
	22	Idler arm assembly	2.6.4				M 4 No. 64	
	23	Supply tension band	2.6.5	★	●		M 4 No. 82	
	24	Take-up tension band	2.6.6				M 4 No. 84D	
	25	Sub-brake	2.6.7				M 4 No. 55	
	26	Supply reel disk assembly	2.4.6	☆	☆	☆	–	Oiling to the shaft.
	27	Take-up reel disk assembly	2.4.6				–	Oiling to the shaft.
Others	28	Head cleaner	2.5.3	●			M 4 No. 116	Excluded from drum assembly
	29	Cassette housing assembly	2.6.2				M 5	
	30	Control cam	2.7.16	★	●		M 4 No. 9	
	31	Roller	2.7.16				M 4 No. 8	
	32	Pinch cam arm assembly	2.7.16				M 4 No. 14	

Note: For fixing an aim to service, follow the indication of the DRUM HOUR METER appearing on the MENU switch setting screen in general.
A: every 500 hours, B: every 1000 hours, C: every 2000 hours

2.4.3 Cleaning

It is desirable to carry out periodical cleaning of the tape transport system, however, it is almost impossible to do it during actual use of the set. Therefore, clean the tape transport system, without fail whenever the set is brought in for service. For cleaning, use fine woven cotton cloth moistened with ethyl alcohol.

1. If the head is dirty or dusty, playback picture may consist of a great deal of minute square blocks because of malfunction of error correction, or the set fails in playing back picture for the worst.
   For cleaning the video head, turn the middle drum in the normal direction (connter clockwise) while pressing quality paper lightly onto the surface of the middle drum.

Note:

Since the video head is weak against vertical force (applied in up-down direction), it may easily be damaged if cleaning paper is moved.

2. Dirty and dusty tape guide not only increases dirt on the video head but also damages tape.
   If dust and foreign particles have collected on and around guide rollers, it may possibly cause abnormal roller rotation and may result in deterioration in picture quality as mentioned above.

2.4.4 Oiling and greasing

If oil or grease looks worn or deteriorated, wipe it off and then apply new oil or greases to the specified place.

1. Table 2-4-2 shows oil and grease used in this set.

Table 2-4-2 Oil an grease used in this set

Classificcation	Name	Part No.
Oil*	Cosmo Hydro HV56	COSMO-HV56
Grease	Moriton Grease (Black)	MOS2-C

*General spindle oil (low viscosity) is substitutable.

2. Control cam needs greasing every 2000 hours of operation.
3. Other parts need greasing every 2000 hours of operation or at the time of replacement.
4. For parts that need oiling or greasing, refer to the exploded view of SECTION 5 EXPLODED VIEWS AND PARTS LIST.

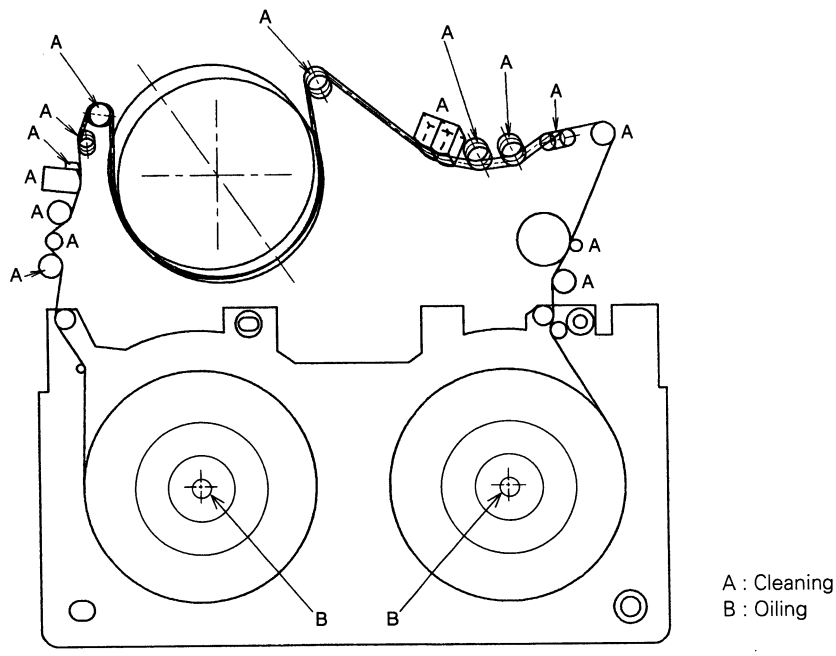

Fig. 2-4-3

2.5 PERIODICAL MAINTENANCE AT EVERY 500 HOURS

2.5.1 500-hour periodical maintenance flowchart

Fig. 2-5-1 shows the procedure of the periodical maintenance operation to be performed after every 500 hours of operation.

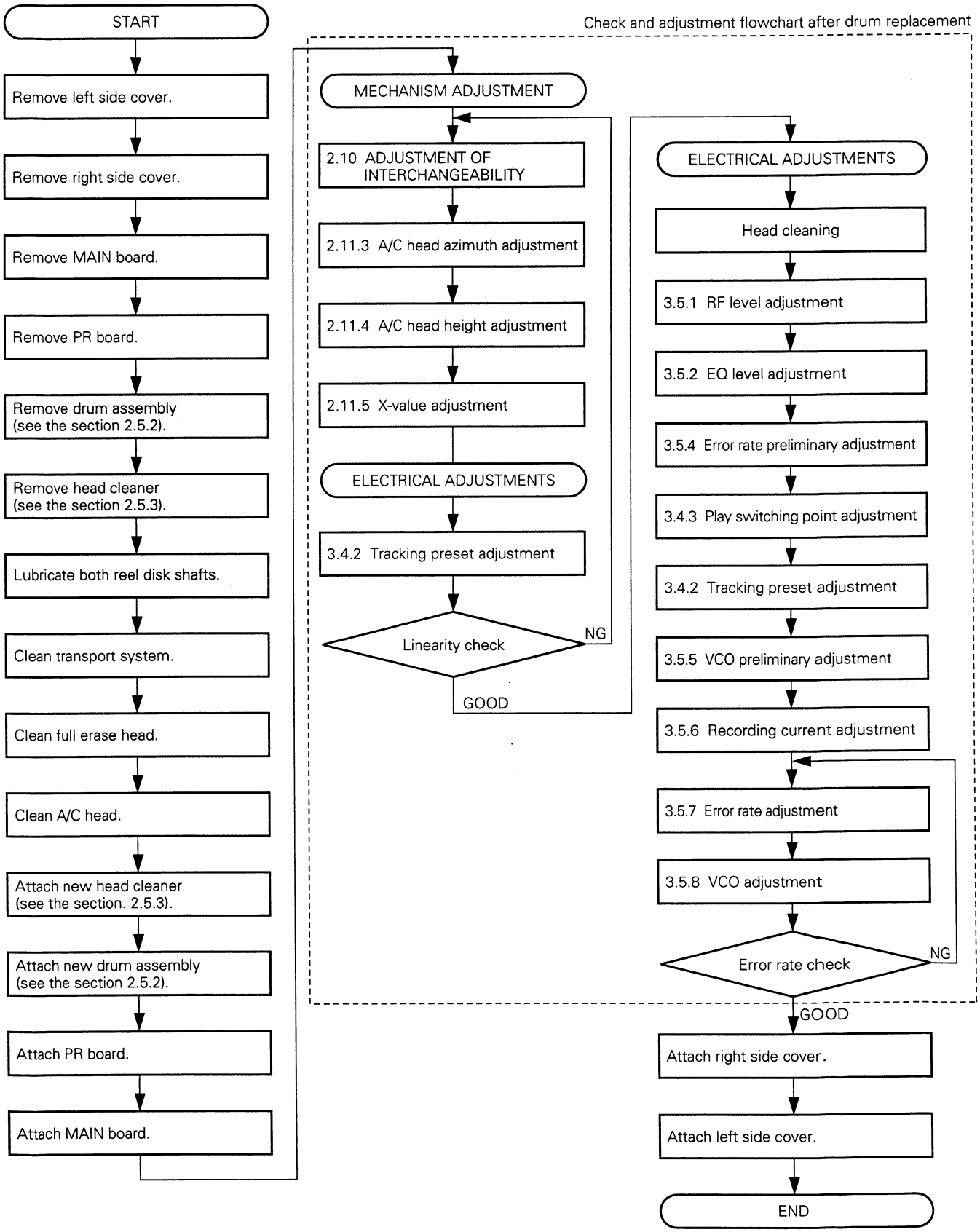

Fig. 2-5-1 500-Hour Periodical Maintenance Flowchart

No.	Item	Reference Diagrams	Procedure

2.5.2 Drum assembly replacement

[CAUTION] • When replacing the drum assembly, take enough care to avoid leaving fingerprints on the drum assembly, by wearing gloves, etc.

• After replacing the drum assembly, be sure to perform the adjustments as shown in the flowchart (see Fig. 2-5-1).

1	Removal	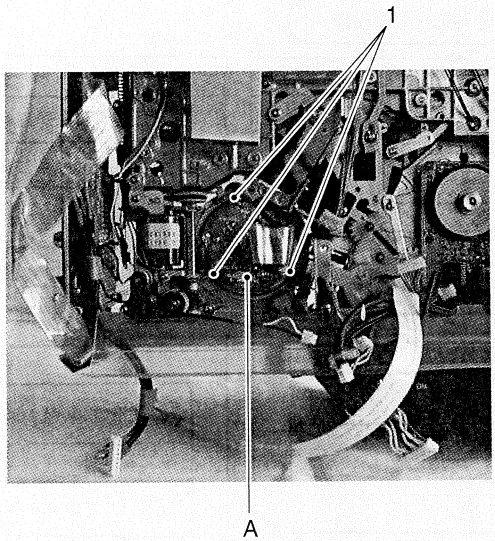 **Fig. 2-5-2** 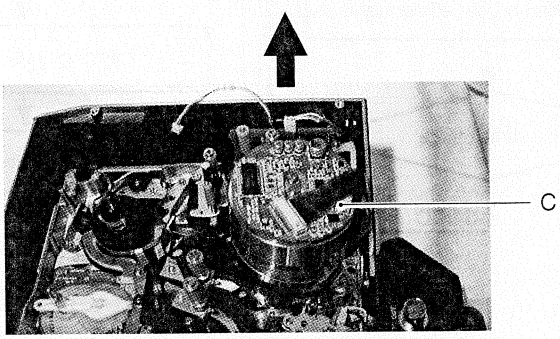 **Fig. 2-5-3**	1. Remove the connector C. (see Fig. 2-5-3) 2. Remove the three screws 1 which are retaining the drum from the rear side. (see Fig. 2-5-2). When removing the screws, support the drum assembly A from its front side with your hand so that it does not fall down. 3. Remove the drum assembly by gently lifting it upward (see Fig. 2-5-3). 4. Remove the flat cable B (see Fig. 2-5-4). 5. Remove the shield plate D (see Fig. 2-5-5). 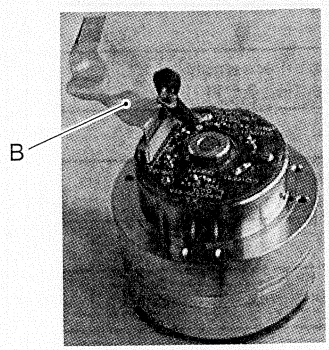 **Fig. 2-5-4** 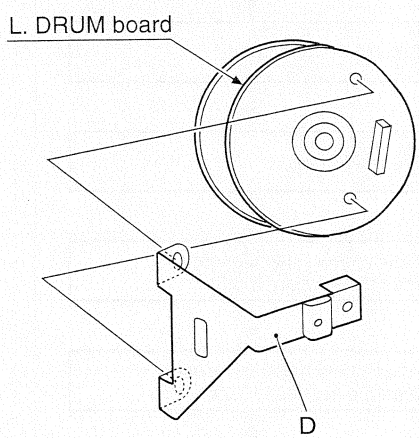 **Fig. 2-5-5**

No.	Item	Reference Diagrams	Procedure

2	Attaching	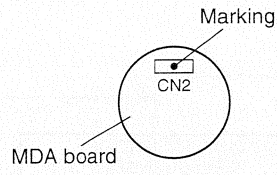	1. Attach the drum assembly by reversing the removal procedure. The tighten torque of screw 1 should be 0.49 N-m (5 kgf-cm). 2. After attaching the drum assembly, set the DIP switch S201 on MAIN board to as left according to marking of the drum assembly. 3. Perform checks and adjustments as indicated in Fig. 2-5-1, " Check and Adjustments Flowchart After Drum Replacement".

Marking of the drum assembly	S201 [MAIN : A-1E]			
	1	2	3	4
F	OFF	OFF	OFF	OFF
E	OFF	OFF	OFF	ON
D	OFF	OFF	ON	OFF
C	OFF	OFF	ON	ON
B	OFF	ON	OFF	OFF
A	OFF	ON	OFF	ON
9	OFF	ON	ON	OFF
0	ON	ON	ON	ON
1	ON	ON	ON	OFF
2	ON	ON	OFF	ON
3	ON	ON	OFF	OFF
4	ON	OFF	ON	ON
5	ON	OFF	ON	OFF
6	ON	OFF	OFF	ON
7	ON	OFF	OFF	OFF

CAUTION

The configuration of the S201 is arranged to satisfy the requirements of the high-speed auto tracking system which has newly been added to the PR-D92/52. This new auto tracking feature enables a faster startup of the servo during playback than was possible with previous auto tracking systems.
Since the tracking pattern should now be more accurate during recording, the MAIN board should be configured to set the head angle of the S201. If the S201 is not set properly and the recorded tape is played on a VCR equipped with the high-speed auto tracking feature (PR-D92/52),the high-speed auto tracking may not function properly. DY-90 does not have high-speed auto tracking circuitry.

2.5.3 Head cleaner replacement

[CAUTION] • When replacing the head cleaner, take enough care to avoid leaving fingerprints on it.

1	Removal	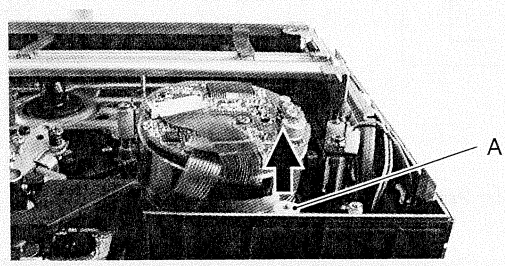	1. Pull out the cleaner A (see Fig. 2-5-6).
2	Attaching		1. Insert a new cleaner.

Fig. 2-5-6

2.6 PERIODICAL MAINTENANCE AT EVERY 1000 HOURS

2.6.1 1000-hour periodical maintenance flowchart

Fig. 2-6-1 shows the procedure of the periodical maintenance operation to be performed after every 1000 hours of operation.

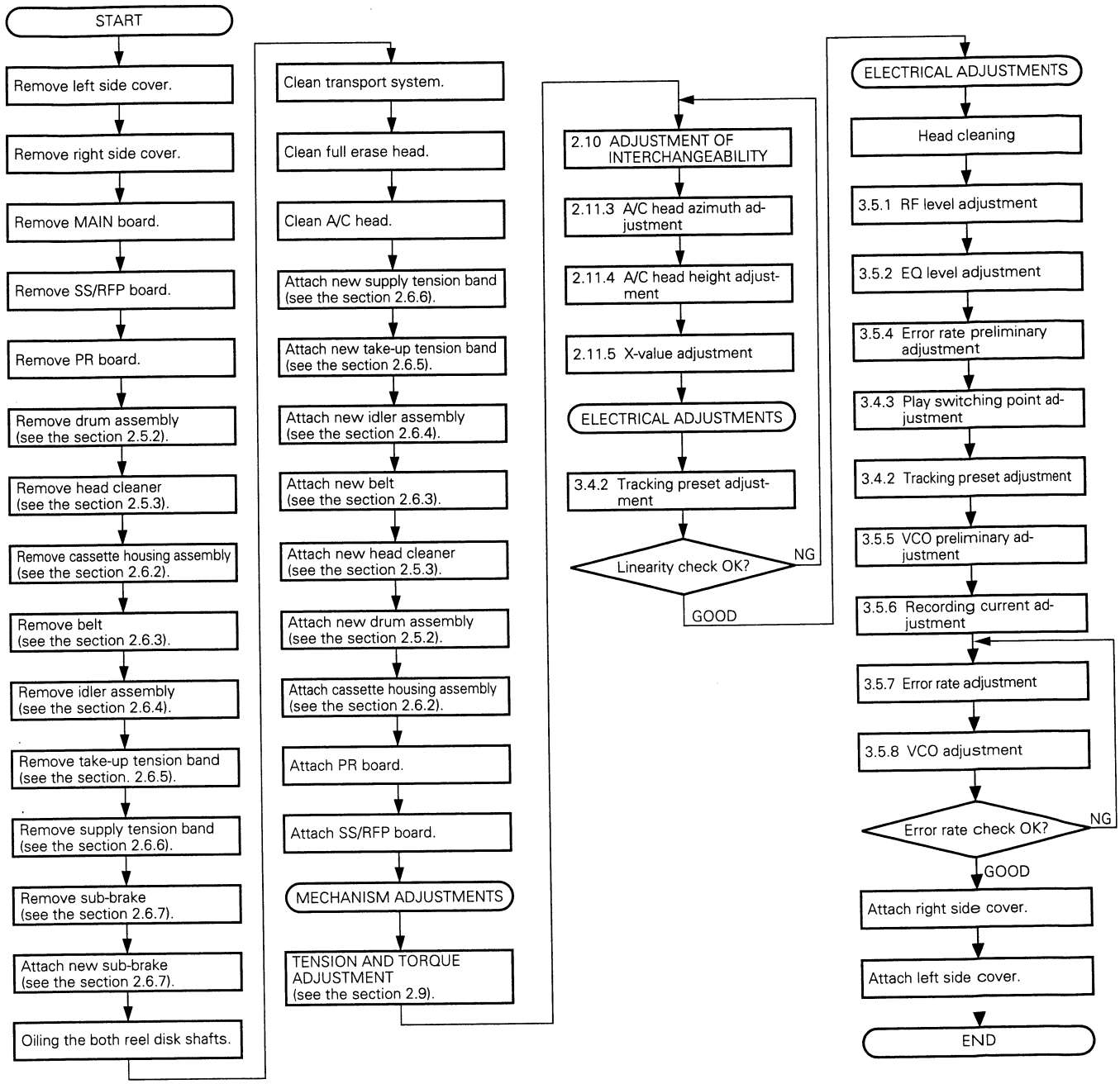

Fig. 2-6-1 1000-Hour Periodical Maintenance Flowchart

No.	Item	Reference Diagrams	Procedure

2.6.2 Cassette housing assembly replacement

1	Removal	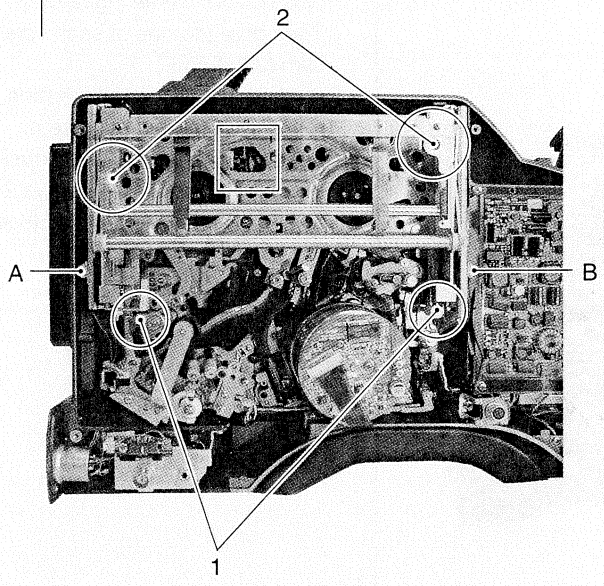 Fig. 2-6-2	1. Remove the left side cover (see the section. 1.2.2).
		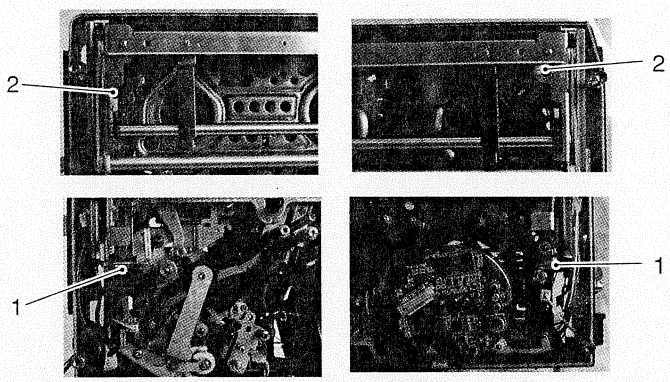 Fig. 2-6-3 (Enlarged view of section ○ in Fig. 2-6-2)	2. Remove connectors A and B (see Fig. 2-6-2). 3. Remove the two screws 1 and loosen the two screws 2 (the screws 2 cannot be removed because they are held by a spring) (see Fig. 2-6-3). The right screw of screws 2 is located behind the door of the cassette housing assembly, so it should be loosened after pushing back the door.
		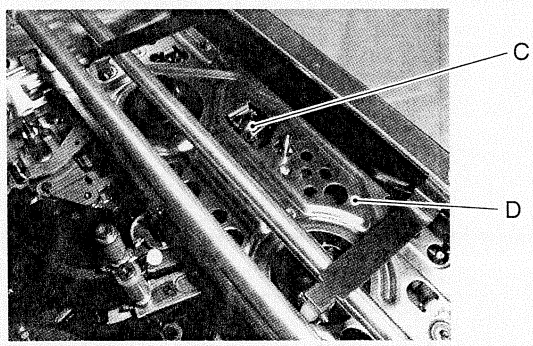 Fig. 2-6-4 (Enlarged view of section □ in Fig. 2-6-2)	4. Remove claw C of the lock unit. This unlocks the cassette housing and opens the cassette housing assembly D (see Fig. 2-6-4). 5. Remove cassette housing assembly D.

No.	Item	Reference Diagrams	Procedure
1	Attaching	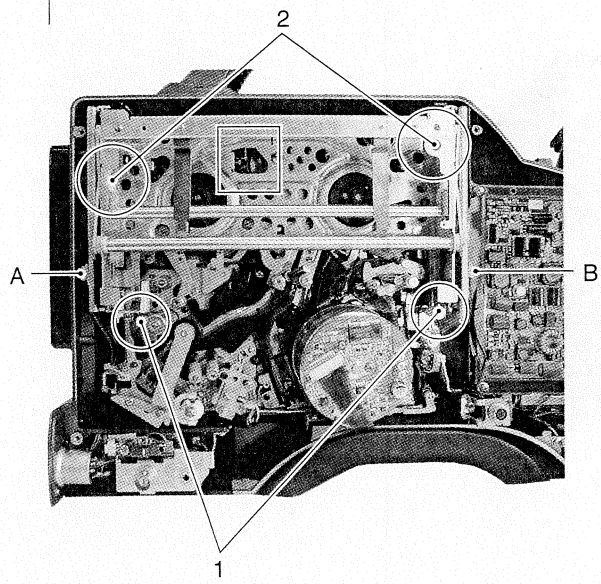 **Fig. 2-6-5**	1. Attach cassette housing assembly D using the two screws 1 (see Fig. 2-6-5). The tighten torque of each screw should be 0.27 N-m (3 kgf-cm). 2. Push the pantograph section of the cassette housing assembly to close it. 3. Push the door of cassette housing assembly, and then, tighten the two screws 2 (see Fig. 2-6-5). 4. Attach connectors A and B (see Fig. 2-6-5).

No.	Item	Reference Diagrams	Procedure

2.6.3 Belt replacement

1	Removal	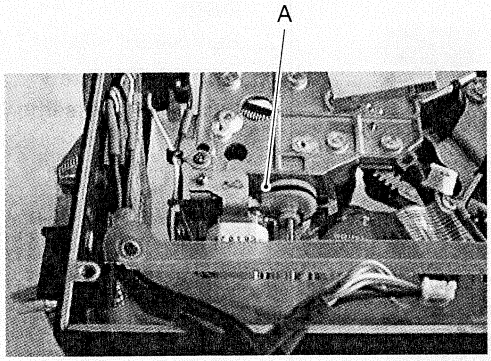 Fig. 2-6-6	1. Remove the MAIN board. (see sub section 1.2.6) 2. Remove belt A (see Fig. 2-6-6).
2	Attaching		1. Attach by reversing the removal procedure.

2.6.4 Idler arm assembly replacement

1	Removal	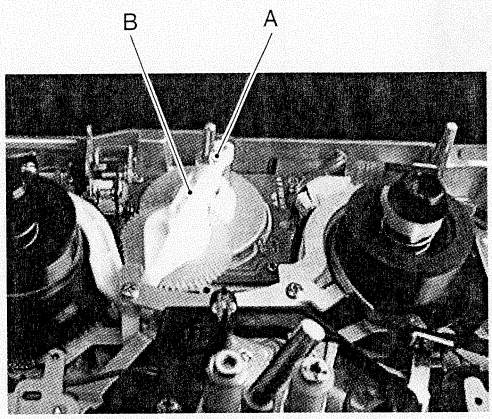 Fig. 2-6-7	1. Remove the cassette housing assembly. (see sub section 2.6.2) 2. Remove E-washer A (see Fig. 2-6-7). 3. Remove idler arm assembly by lifting it (see Fig. 2-6-7).
2	Attaching		1. Attach by reversing the removal procedure.

No.	Item	Reference Diagrams	Procedure

2.6.5 Take-up tension band assembly replacement

[CAUTION] • The reverse mode torque should be adjusted after replacing the take-up tension band assembly.

1	Removal	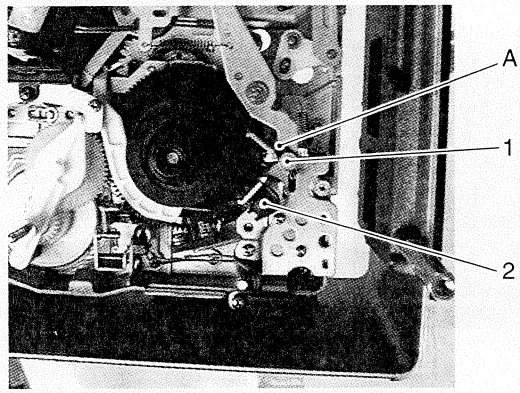 **Fig. 2-6-8**	1. Remove the cassette housing assembly (see Fig. 2-6-2). 2. Remove slit washer 1 (see Fig. 2-6-8). 3. Remove the screw 2, then remove the take-up tension band assembly A (see Fig. 2-6-8).
2	Attaching	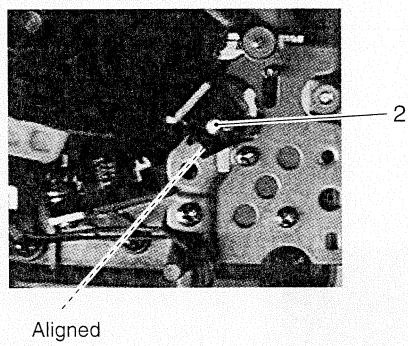 **Fig. 2-6-9** 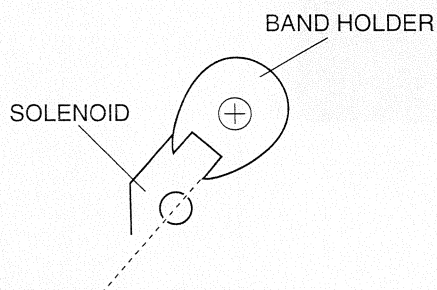 Attach so that the center of the hole on the solenoid bracket is aligned with the extension of the left edge of the dented part of the band holder. **Fig. 2-6-9 (Enlargement)**	1. Attach by reversing the removal procedure. 2. Attach the screw 2 so that the take-up tension band assembly A comes in the position indicated in Fig. 2-6-9. 3. Adjust the reverse torque. (see subsection 2.9.2)

No.	Item	Reference Diagrams	Procedure

2.6.6 Supply tension band assembly replacement

[CAUTION] • The play mode torque should be adjusted after replacing the supply tension band assembly.

1	Removal	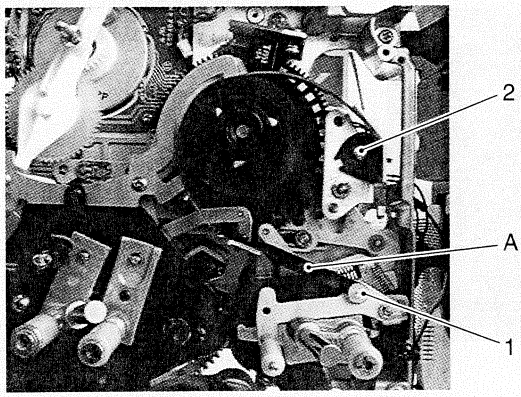 **Fig. 2-6-10**	1. Remove the cassette housing assembly (see Fig. 2-6-2). 2. Remove slit washer 1 (see Fig. 2-6-10). 3. Remove the screw 2, then remove the supply tension band assembly A (see Fig. 2-6-10).
2	Attaching	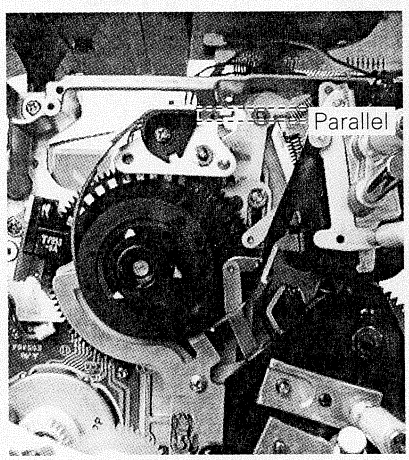 **Fig. 2-6-11**	1. Attach by reversing the removal procedure. 2. Attach the screw 2 so that the supply tension band assembly A comes in the position indicated in Fig. 2-6-11. 3. Adjust the play torque. (see sub section 2.9.3)

No.	Item	Reference Diagrams	Procedure

2.6.7 Sub-brake replacement

1	Removal	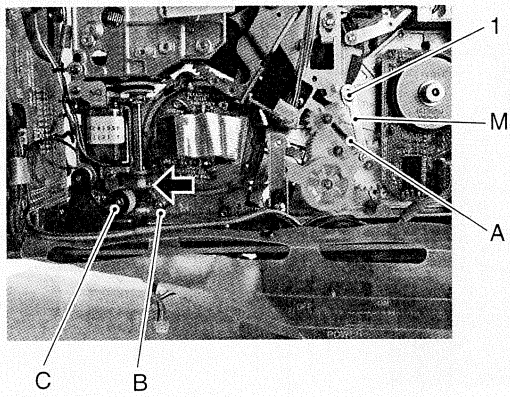	1. Remove spring A and screw 1 (see Fig. 2-6-12). 2. Remove the timing belt B from the position of the worm wheel C (see the section. 2-6-12).

Fig. 2-6-12

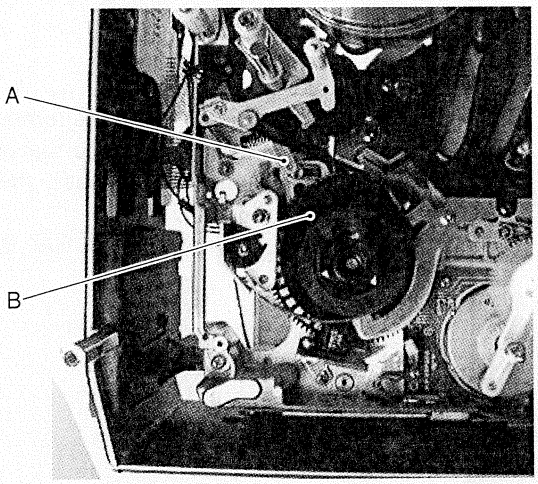

Fig. 2-6-13

3. Advance the timing belt B by rotating it in the direction of the arrow (see Fig. 2-6-13) until arm A of the supply pole base assembly moves to a position where the arm is not in the way when the supply reel disk assembly is removed (see Fig. 2-6-12).

No.	Item	Reference Diagrams	Procedure
		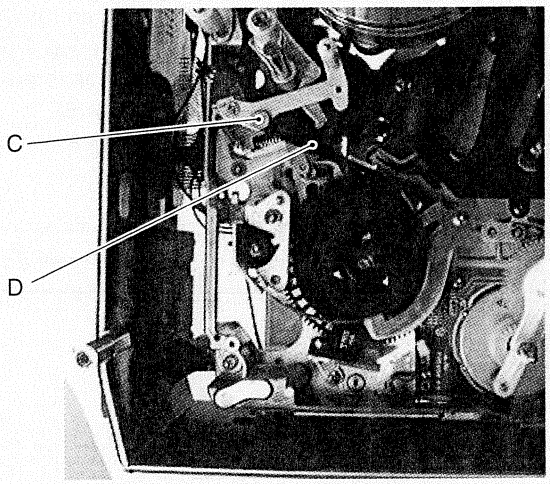 **Fig. 2-6-14**	4. Remove slit washer C and the screw 1, then remove the supply tension band assembly D (See Fig. 2-6-14).
		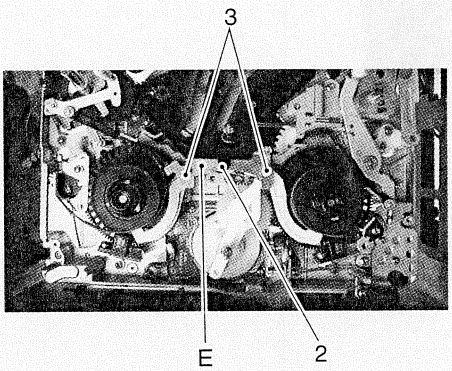 **Fig. 2-6-15**	5. Remove the screw 2 and the two screws 3, then remove the arm guide E (see Fig. 2-6-15).

No.	Item	Reference Diagrams	Procedure
		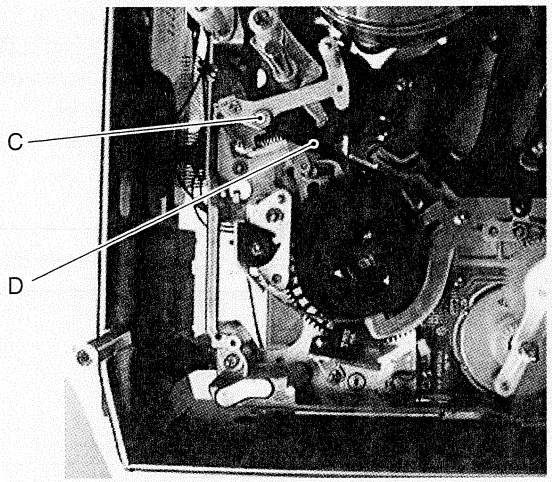 **Fig. 2-6-14**	4. Remove slit washer C and the screw 1, then remove the supply tension band assembly D (See Fig. 2-6-14).
		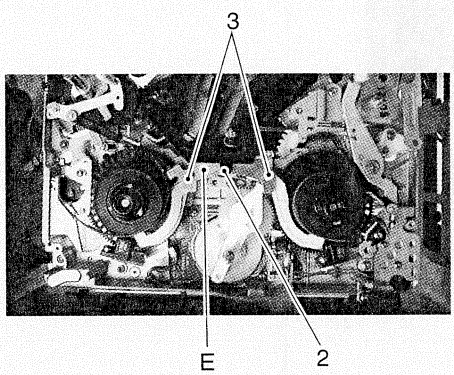 **Fig. 2-6-15**	5. Remove the screw 2 and the two screws 3, then remove the arm guide E (see Fig. 2-6-15).

No.	Item	Reference Diagrams	Procedure
		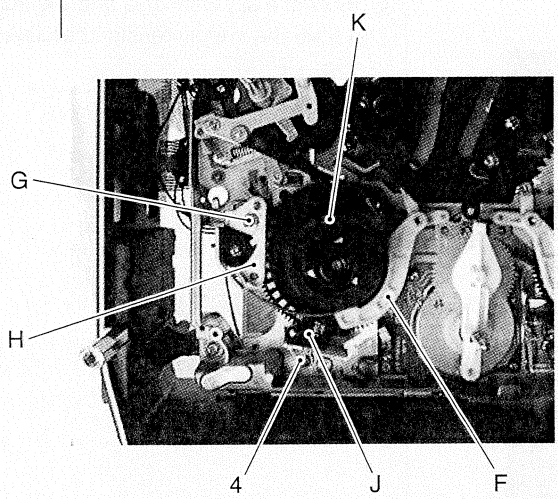 **Fig. 2-6-16**	6. Remove supply brake arm assembly F by lifting it (see Fig. 2-6-16). 7. Remove E-washer G then remove band holder bracket assembly H (see Fig. 2-6-16). 8. Remove the screw 4 then remove the SP REEL FG board J (see Fig. 2-6-16). 9. Remove supply reel disk assembly K by lifting it (see Fig. 2-6-16). **CAUTION** • Be sure to use the same reel disk assemlby.
		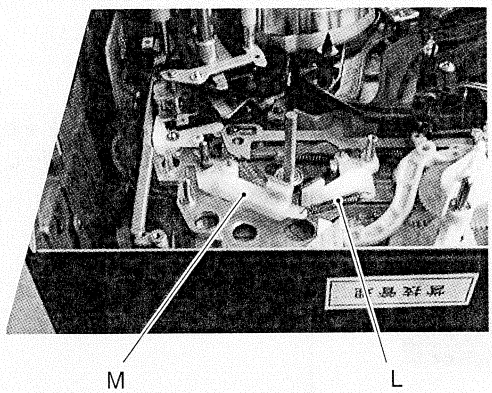 **Fig. 2-6-17**	10. Remove spring L then remove sub-brake assembly M by lifting it (see Fig. 2-6-17).
2	Attaching	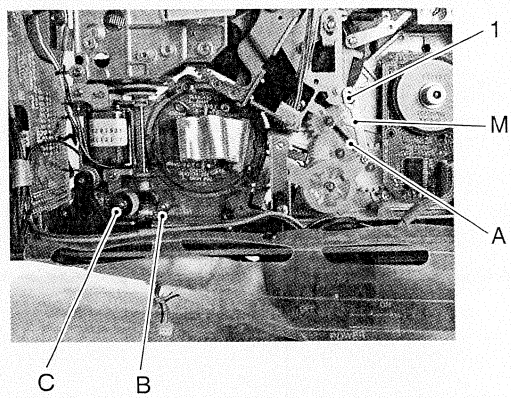 **Fig. 2-6-18**	1. Attach by reversing the removal procedure (see Fig. 2-6-18). After this, adjust the timing belt tension (see the subsection. 2.7.12).

2.7 PERIODICAL MAINTENANCE AT EVERY 2000 HOURS

2.7.1 2000-hour periodical maintenance flowchart

Fig. 2-7-1 shows the procedure of the periodical maintenance operation to be performed after every 2000 hours of operation.

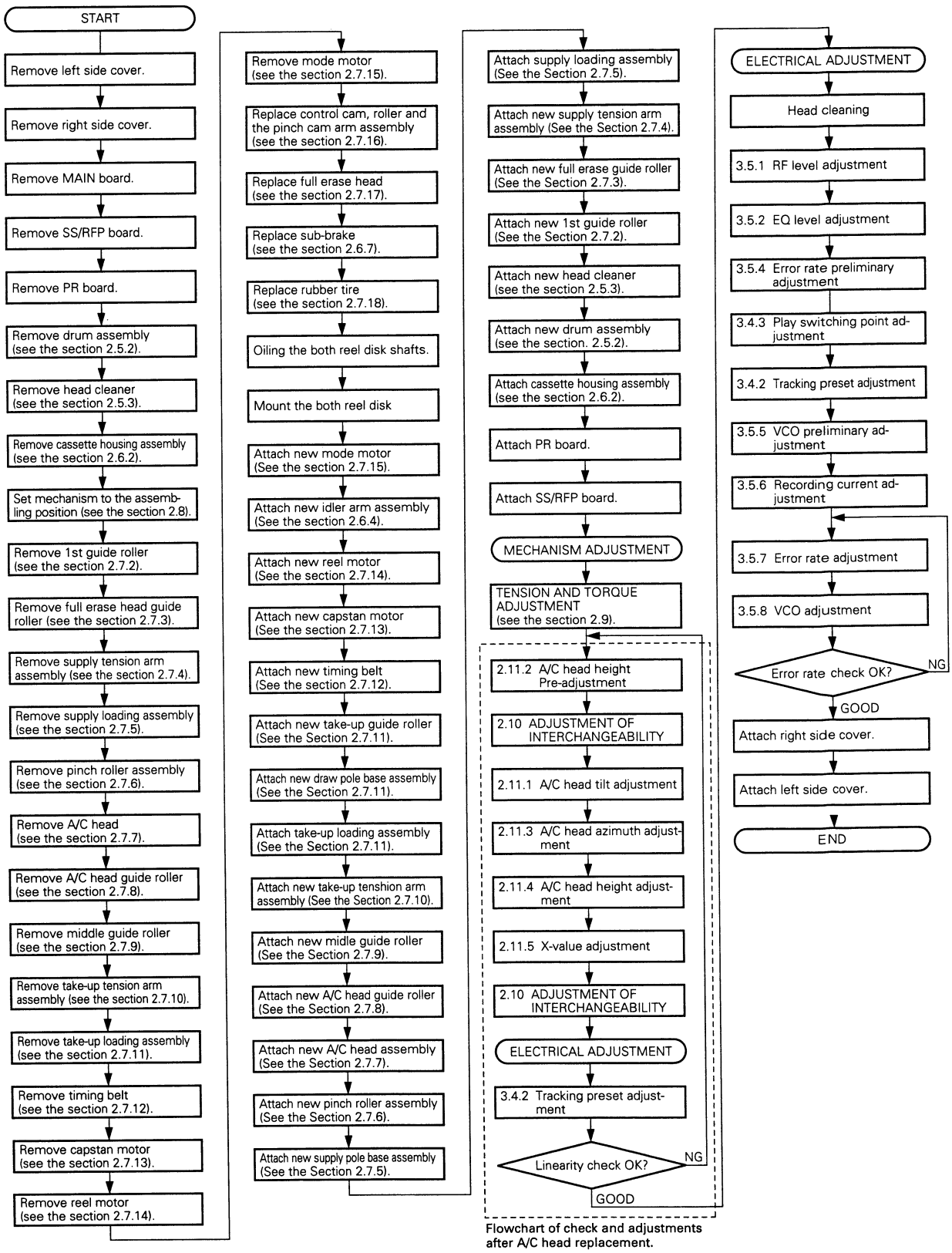

Fig. 2-7-1 2000-Hour Periodical Maintenance Flowchart

No.	Item	Reference Diagrams	Procedure

2.7.2 1st guide roller replacement

1	Removal	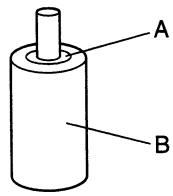 **Fig. 2-7-2**	1. Remove slit washer A (see Fig. 2-7-2). 2. Remove 1st guide roller B (see Fig. 2-7-2).
2	Attaching		1. Attach by reversing the removal procedure.

2.7.3 Full erase head guide roller replacement

[CAUTION] • Check the tape transport system after replacing the full erase head guide roller.

1	Removal	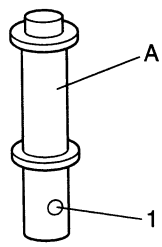 **Fig. 2-7-3**	1. Loosen the set screw 1 (which does not have to be removed) (see Fig. 2-7-3). 2. Remove the full erase head guide roller A by rotating it counterclockwise (see Fig. 2-7-3).
2	Attaching	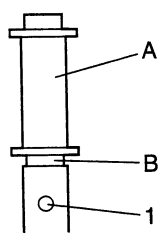 **Fig.2-7-4**	1. Attach the full erase head guide roller A by inserting and rotating it clockwise. Attach it so that rubber ring B comes in light contact with the surface (see Fig. 2-7-4). 2. Check the tape transport system. (see subsection 2.11) 3. Tighten the set screws 1 in order to fix the full erase head guide roller A.

No.	Item	Reference Diagrams	Procedure

2.7.4 Supply tension arm assembly replacement

1	Removal	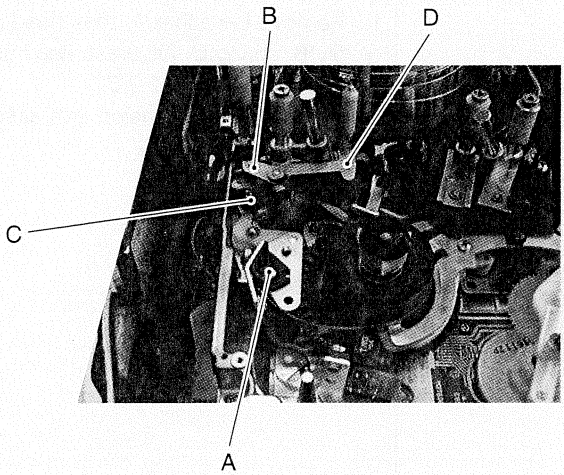 **Fig. 2-7-5**	1. Remove screw A (see Fig. 2-7-5). 2. Remove the E-washer B then remove spring C (see Fig. 2-7-5). 3. Remove the supply tension arm assembly D by pulling it upward.
2	Attaching		1. Attach by reversing the removal procedure. 2. Attach the screw A by referring to Section 2.6.6. 3. Adjust the play torque. (see subsection 2.9.3)

No.	Item	Reference Diagrams	Procedure

2.7.5 Supply pole base assembly and supply loading gear replacement

[CAUTION] • Before replacement, set the mechanism to the position indicated by Section "2.8 MECHANISM ASSEMBLING POSITION".
• Check the transport system after replacing the supply pole base assembly.

2	Removal of supply loading assembly	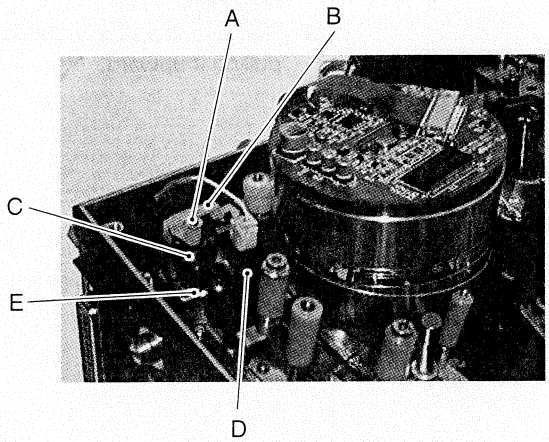 **Fig. 2-7-6**	1. Remove E-washer A, then head cleaner assembly B, spring C, full erase head assembly D and spring E (see Fig. 2-7-6). 2. Remove supply tension arm assembly (see the section 2.7.4).
		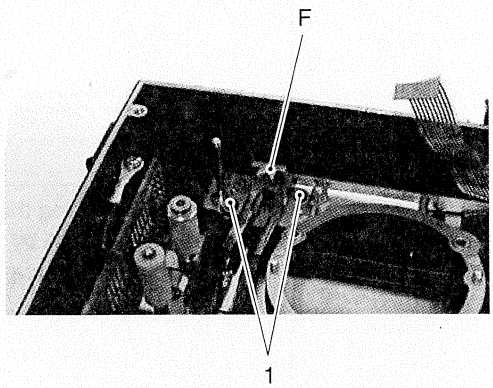 **Fig. 2-7-7**	3. Remove the two screws 1 then remove the supply catcher F (see Fig. 2-7-7).
		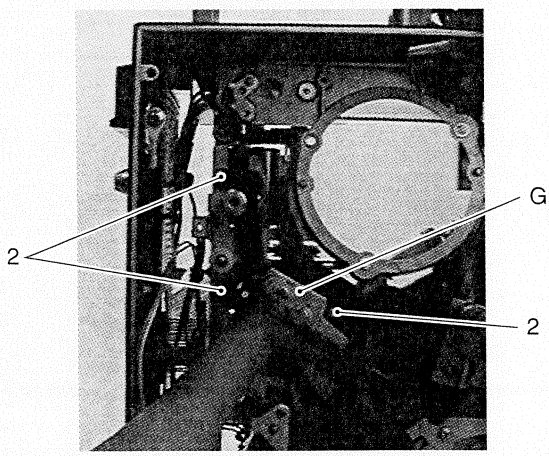 **Fig. 2-7-8**	4. Remove the three screws 2 while rotating the supply pole base assembly G slightly clockwise (see Fig. 2-7-8). 5. Remove the supply loading assembly by lifting it.

No.	Item	Reference Diagrams	Procedure
2	Removal of supply pole base assembly	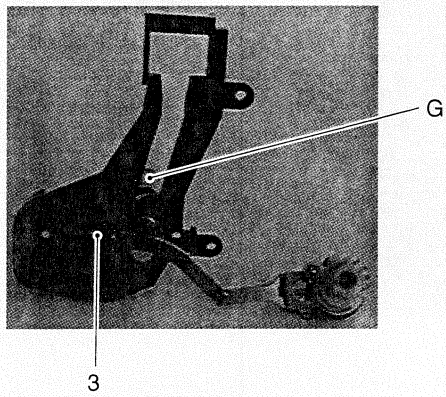 **Fig. 2-7-9**	6. Remove the screw 3; this lets the supply pole base assembly come out (see Fig. 2-7-9).
3	Removal of the supply loading gear	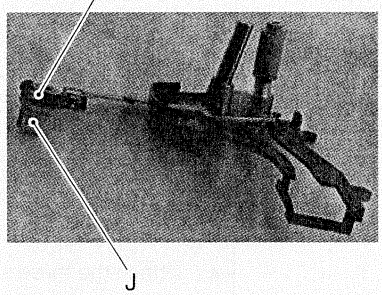 **Fig. 2-7-10**	7. Remove the spring H; this lets the supply loading gear J come out (see Fig. 2-7-10).
4	Attaching supply loading gear	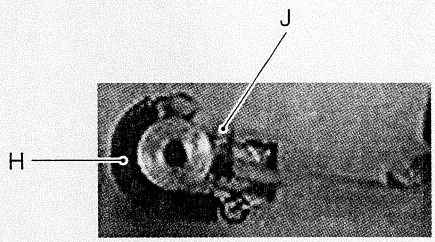 **Fig. 2-7-11**	1. Fit the supply loading gear J onto the shaft and attach spring H (attach it so that the longer hook of the spring comes on the gear side, the shorter hook comes on the arm side, and the opened side of each hook faces the inner side).

No.	Item	Reference Diagrams	Procedure
5	Attaching the supply pole base assembly	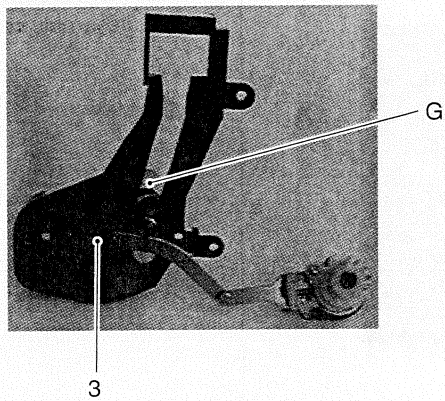 Fig. 2-7-12	2. Attach the supply pole base assembly G using the screws 3. The securing torque should be 0.14 N-m (1.5 kgf-cm) (see Fig. 2-7-12).
6	Attaching the supply loading assembly	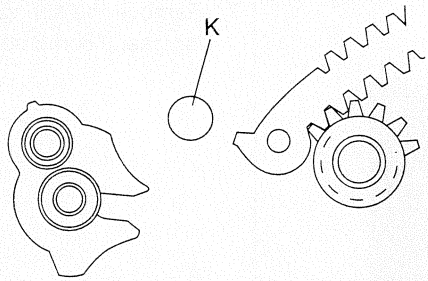 Fig. 2-7-13 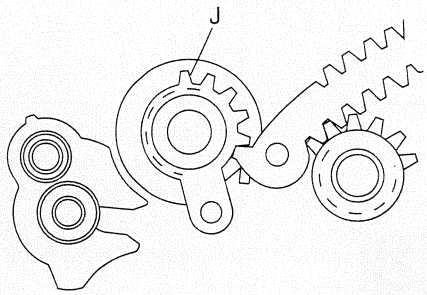 Fig. 2-7-14	3. Attach the supply loading gear J onto the support K on the deck so that the support fits into the hole on the gear (see Fig. 2-7-13). Attach it so that the gears are meshed as shown in Fig. 2-7-14. 4. Attach the three screws 2 while rotating the supply pole base assembly G slightly clockwise (see Fig. 2-7-15). 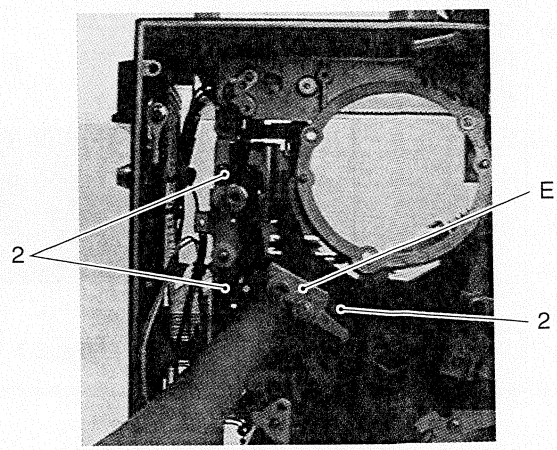 Fig. 2-7-15

No.	Item	Reference Diagrams	Procedure
		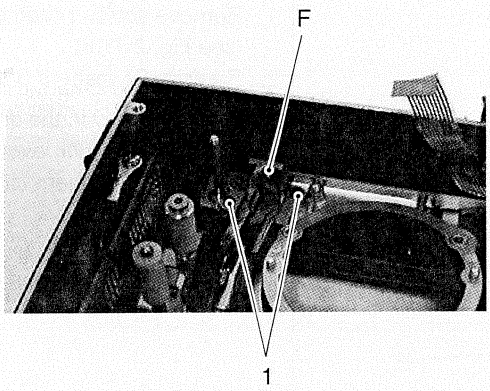 **Fig. 2-7-16**	5. Attach the supply catcher F using the two screws 1 (see Fig. 2-7-16). 6. Attach the supply tension arm assembly (see the section 2.7.4).
		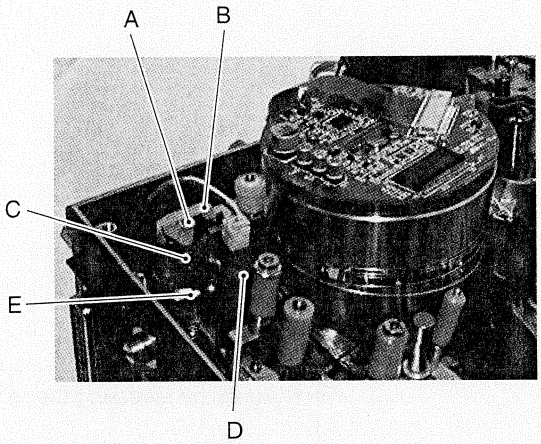 **Fig. 2-7-17**	7. Attach the spring E, fully erase head assembly D, spring C, head cleaner assembly B and E-washer A (see Fig. 2-7-17).

No.	Item	Reference Diagrams	Procedure

2.7.6 Pinch roller assembly

[CAUTION] • Before replacement, set the mechanism to the position indicated in subsection "2.8 MECHANISM ASSEMBLING POSITION".

1	Removal	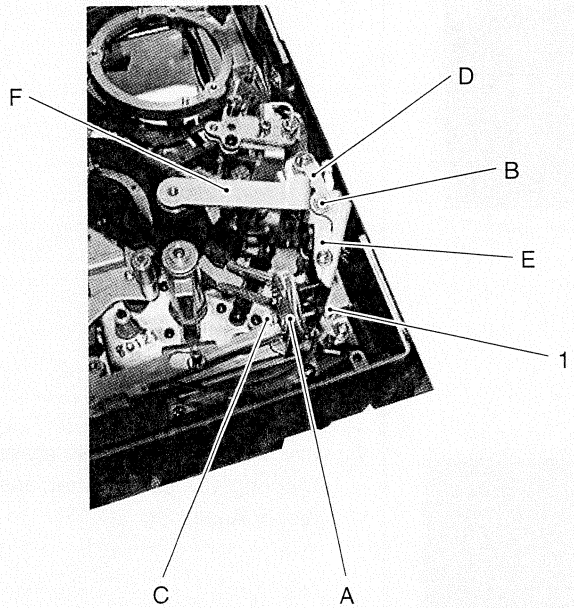 **Fig. 2-7-18**	1. Remove screw 1 then remove AL SENS board A (see Fig. 2-7-18). 2. Remove E-washers B and C (see Fig. 2-7-18). 3. Rotate plate D in the direction of the arrow, then remove pinch lock lever E and pinch roller assembly F by lifting them (see Fig. 2-7-18).
2	Attaching		1. Attach by reversing the removal procedure. **Note:** • Attach the pinch lock lever E and spring as shown below. 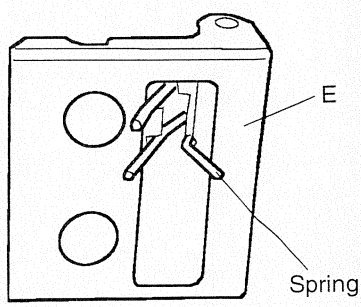

No.	Item	Reference Diagrams	Procedure

2.7.7 A/C head replacement

[CAUTION] • After replacing the A/C head, be sure to perform the adjustments as shown in Fig. 2-7-1.

1	Removal	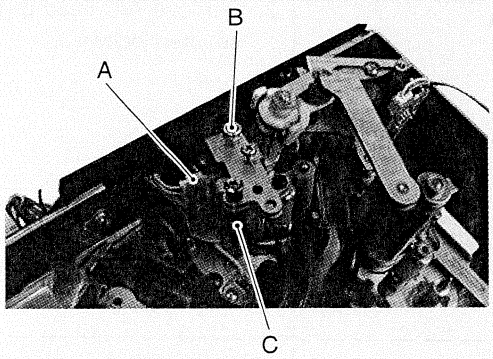 **Fig. 2-7-19**	1. Remove connector A from the A/C head board (see Fig. 2-7-19). 2. Remove A/C head assembly C by removing nut B then lifting the A/C head assembly by turning it slightly counterclockwise.
2	Attaching	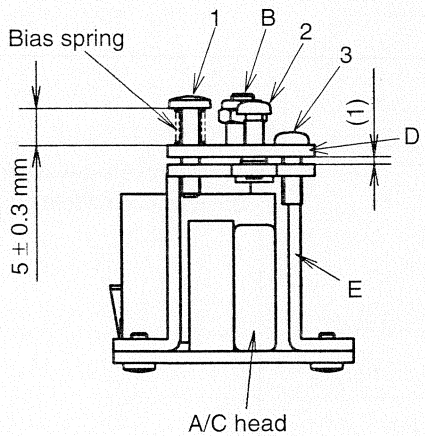 **Fig. 2-7-20**	1. Check that the clearance between A/C head arm D and A/C head base E of A/C head assembly C is 1 mm, that the A/C head arm and A/C head base are parallel and that the height of the bias spring adjustment screw 1 is 5 mm (see Fig. 2-7-20). 2. Attach the A/C head by reversing the removal procedure. 3. Perform checks and adjustments as indicated in Fig. 2-7-1, "Flowchart of Check and Adjustments After A/C Head Replacement".

No.	Item	Reference Diagrams	Procedure

2.7.8 A/C head guide roller replacement

[CAUTION] • Check the transport system after replacing the A/C head guide roller.

1	Removal	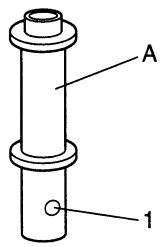 **Fig. 2-7-22**	1. Loosen set screw 1 (which does not have to be removed) (see Fig. 2-7-22). 2. Remove A/C head guide roller A by rotating it counterclockwise.
2	Attaching	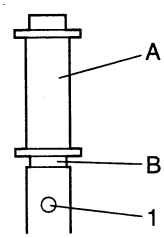 **Fig. 2-7-23**	1. Attach A/C head guide roller A by inserting it and rotating it clockwise. Attach so that rubber ring B comes in light contact with the attached plane (see Fig. 2-7-23). 2. Check the tape transport system (see section 2.11). 3. Tighten set screws 1 to fix A/C head guide roller A.

2.7.9 Middle guide roller replacement

1	Removal	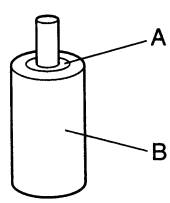 **Fig. 2-7-24**	1. Remove slit washer A (see Fig. 2-7-24). 2. Remove middle guide roller B (see Fig. 2-7-24).
2	Attaching		1. Attach by reversing the removal procedure.

No.	Item	Reference Diagrams	Procedure

2.7.10 Take-up tension arm assembly replacement

[CAUTION] • Check the transport system after replacing the take-up tension arm assembly.

1	Removal	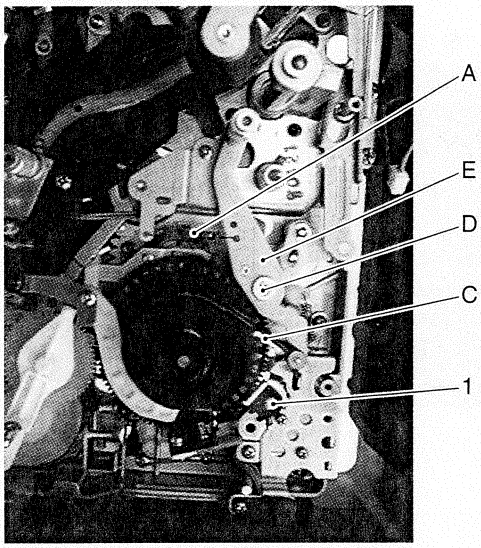 **Fig. 2-7-25**	1. Remove spring A (see Fig. 2-7-25). 2. Remove screw 1 (see Fig. 2-7-25). 3. Remove E-ring D; this lets the take-up tension arm assembly E come out.
2	Attaching	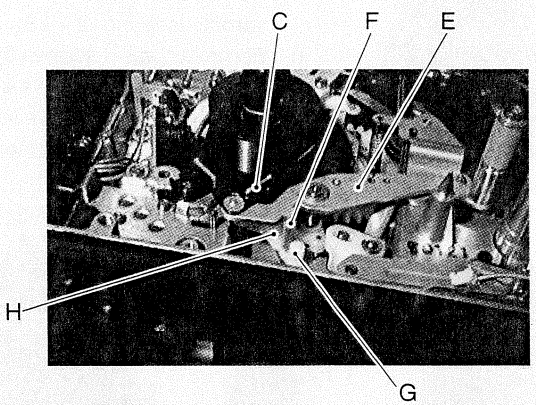 **Fig. 2-7-26**	1. Attach take-up tension arm assembly E so that lever F of the take-up tension arm assembly enters between the two levers G and H as shown in Fig. 2-7-26. 2. Attach E-ring D (see Fig. 2-7-25). 3. Attach take-up tension band C using screw 1 (see subsection 2.6.5) 4. Attach spring A (see Fig. 2-7-25). 5. Adjust the reverse torque. (see subsection 2.9.2)

No.	Item	Reference Diagrams	Procedure

2.7.11 Take-up guide roller, draw pole base assembly and take-up loading assembly replacement

[CAUTION] • Before replacement, set the mechanism to the position indicated by subsection "2.8 MECHANISM ASSEMBLING POSITION".
• Check the transport system after replacing each assembly.

1 Removal of take-up loading assembly

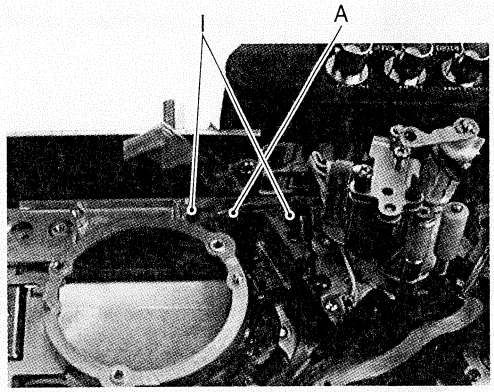

Fig. 2-7-27

1. Remove pinch roller assembly (see the section 2.7.6).
2. Remove supply loading assembly (see the section 2.7.5).
3. Remove the three screws 1 then remove take-up catcher A (see Fig. 2-7-27).

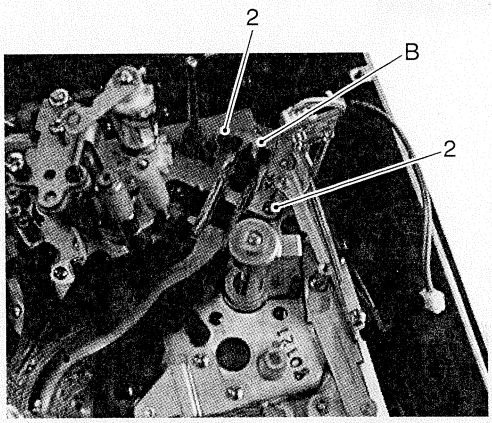

Fig. 2-7-28

4. Remove the two screws 2 then remove draw catcher B (see Fig. 2-7-28).

5. Remove spring D from take-up tension arm assembly (see Fig. 2-7-29).
6. Remove the six screws 3 (see Fig. 2-7-30).
7. Remove the two screws 4 which retain draw loading arm assembly; this lets the take-up loading assembly F come out (see Fig. 2-7-30).

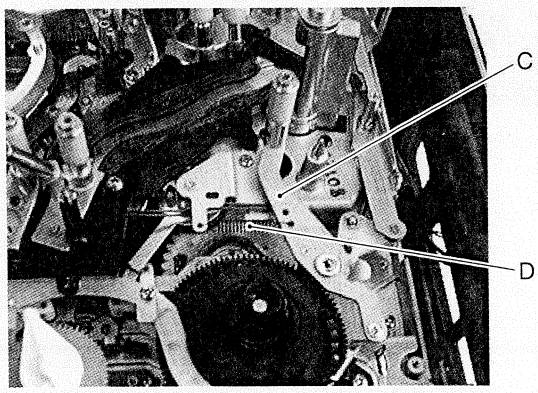

Fig. 2-7-29

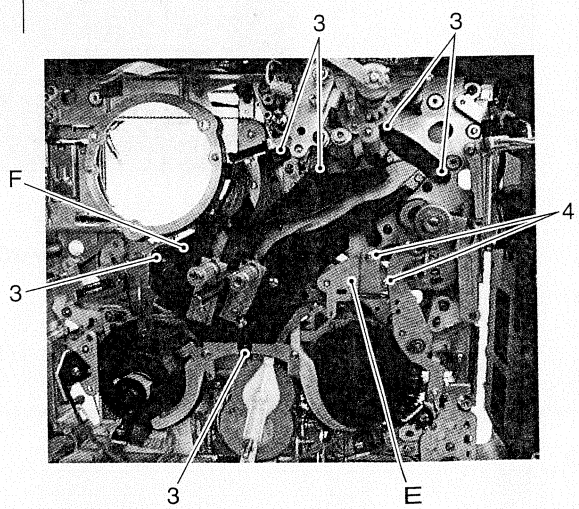

Fig. 2-7-30

No.	Item	Reference Diagrams	Procedure
2	Removal of take-up guide roller	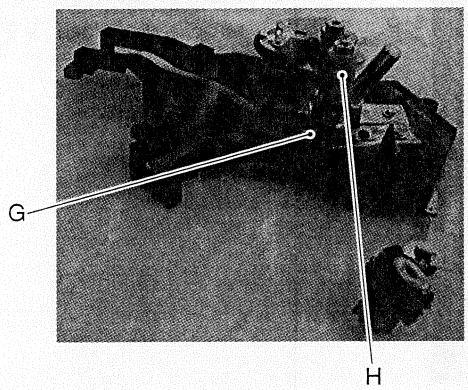 **Fig. 2-7-31**	1. Loosen screw G and remove the take-up guide roller H by rotating it counterclockwise (see Fig. 2-7-31).
3	Removal of draw pole base assembly	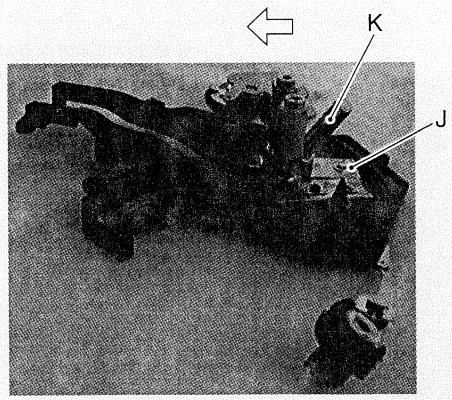 **Fig. 2-7-32**	2. Remove E-washer J then remove draw pole base assembly K by sliding it in the direction of the arrow (see Fig. 2-7-32).
4	Removal of take-up loading gear	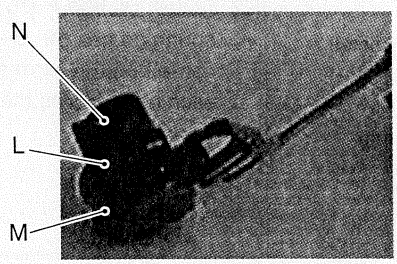 **Fig. 2-7-33**	3. Remove springs L and M; this lets the take-up loading gear N come out (see Fig. 2-7-33).

No.	Item	Reference Diagrams	Procedure
5	Removal of draw loading gear	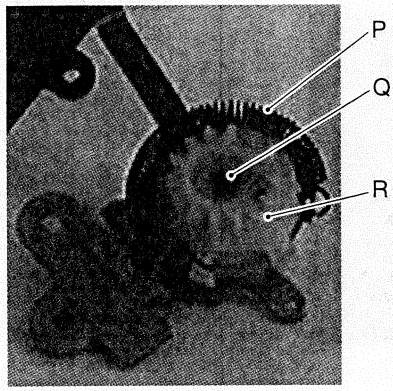 **Fig. 2-7-34**	4. Remove spring P (see Fig. 2-7-34). 5. Remove slit washer Q; this makes it possible to remove draw loading gear R.
6	Attaching draw loading gear	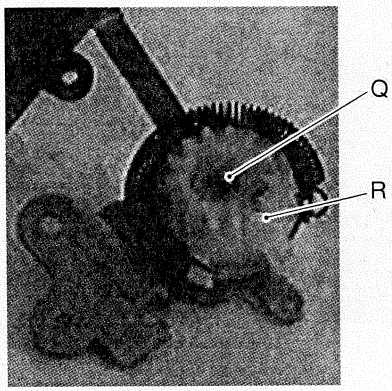 **Fig. 2-7-35**	1. Fit draw loading gear R onto the shaft and retain it by using the slit washer Q (see Fig. 2-7-35).
		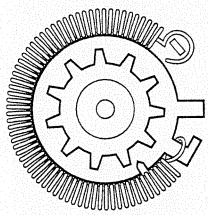 (a) Top view 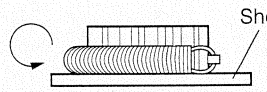 Remove clearance between the spring and the sheet metal by twisting the spring in the direction of the arrow. (b) Side view **Fig. 2-7-36**	2. Attach spring P (so that the longer hook of the spring comes on the gear side, the shorter hook comes on the arm side, and the opened side of each hook faces the inner side) (see Fig. 2-7-36).

No.	Item	Reference Diagrams	Procedure
7	Attaching take-up loading gear	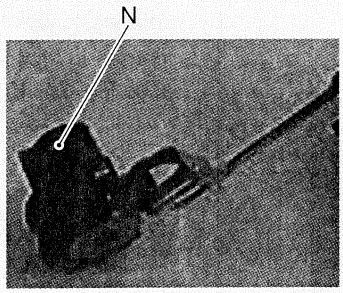 Fig. 2-7-37	1. Fit take-up loading gear N onto the shaft (see Fig. 2-7-37).
		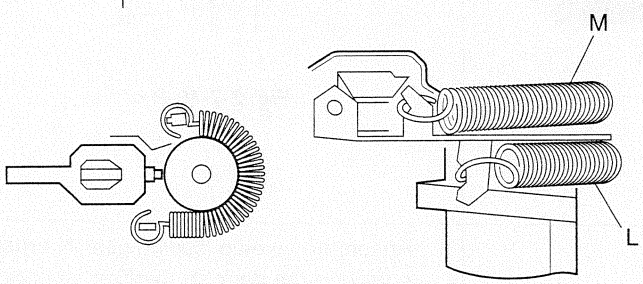 (a) Top view (b) Side view Fig. 2-7-38	2. Attach springs L and M (so that the longer hook of each spring comes on the gear side, the shorter hook comes on the arm side, and the opened side of each hook faces the inner side) (see Fig. 2-7-38).
8	Attaching draw pole base assembly	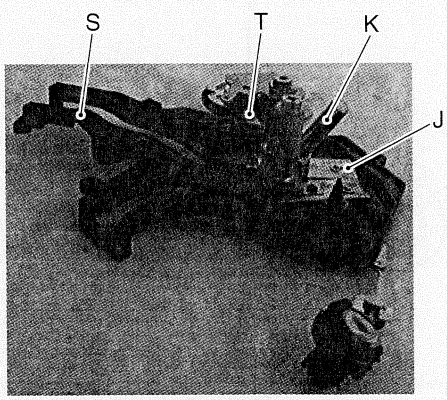 Fig. 2-7-39	1. Position the draw pole base assembly K on the take-up guide rail S, thread the shaft of the draw loading arm assembly T through from the bottom side, and secure it by using the E-washer J (see Fig. 2-5-39).

No.	Item	Reference Diagrams	Procedure
9	Attaching the take-up guide roller	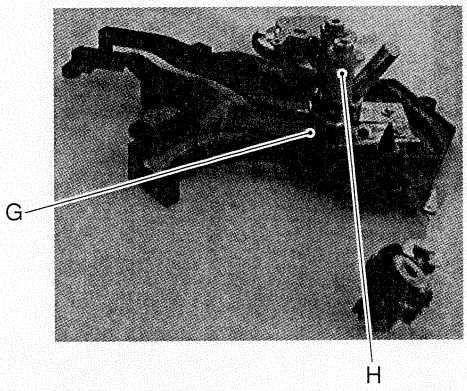 **Fig. 2-7-40-A**	2. Attach take-up guide roller H by inserting it and rotating it clockwise. Attach so that rubber ring U comes in light contact with the attached plane (see Fig. 2-7-40-B). 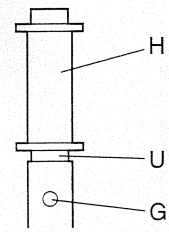 **Fig. 2-7-40-B**
10	Attaching the take-up loading assembly	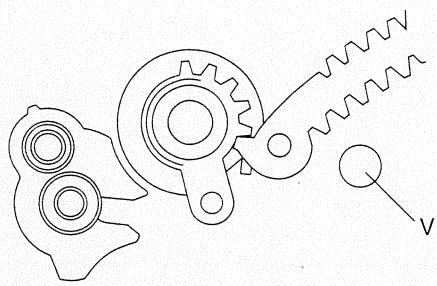 **Fig. 2-7-41** 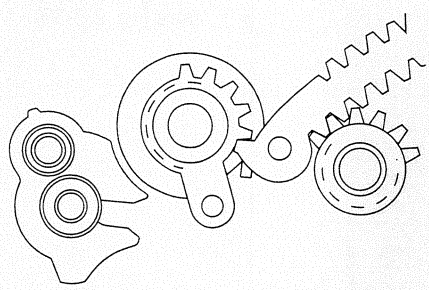 **Fig. 2-7-42**	1. Attach the take-up loading gear N onto the support V on the deck so that the support fits into the hole in the gear (see Fig. 2-7-41). Attach so that the gears are meshed as shown in Fig. 2-7-42.

No.	Item	Reference Diagrams	Procedure

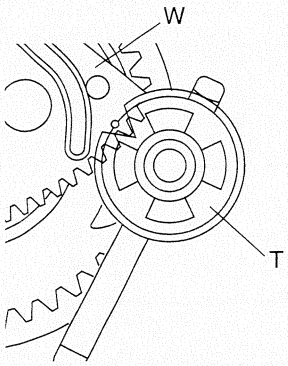

Fig. 2-7-43

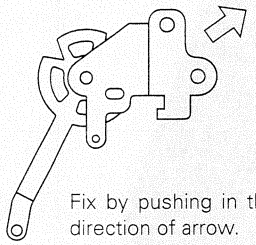

Fig. 2-7-44

2. Fix the draw loading arm assembly by using the two screws 4 so that the notch on the draw loading arm T faces towards the hole on the loading arm gear W (see Figs. 2-7-43 and 2-7-44).

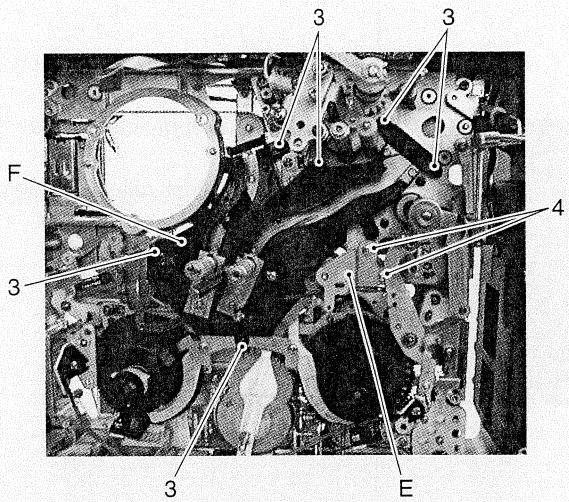

Fig. 2-7-45

3. Fix the take-up loading assembly F using the six screws 3 (see Fig. 2-7-45).

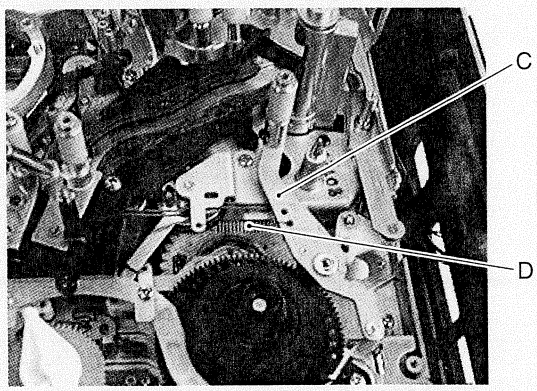

Fig. 2-7-46

4. Attach spring D to the take-up tension arm assembly C (see Fig. 2-7-46).

No.	Item	Reference Diagrams	Procedure
		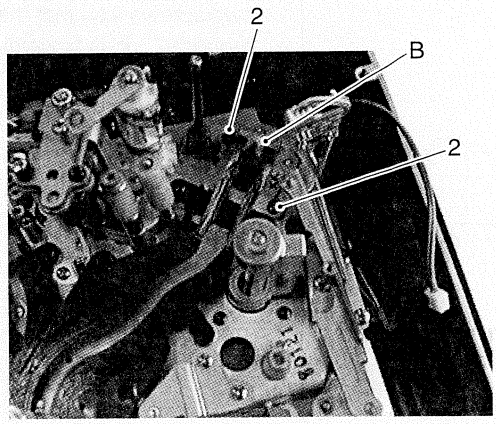 **Fig. 2-7-47**	5. Attach draw catcher B using the two screws 2 (see Fig. 2-7-47).
		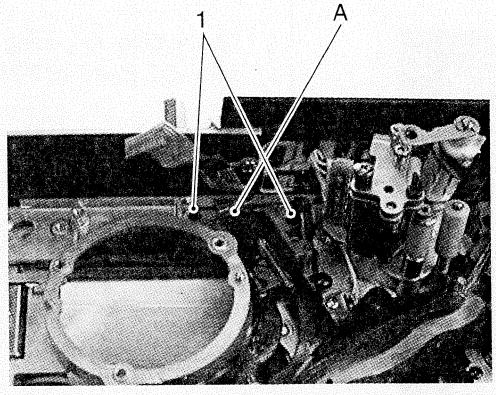 **Fig. 2-7-48**	6. Attach take-up catcher A using the two screws 1 (see Fig. 2-7-48). 7. Attach the supply loading assembly (see the section 2.7.5). 8. Attach the pinch roller assembly (see the section 2.7.6).

No.	Item	Reference Diagrams	Procedure

2.7.12 Timing belt replacement

1	Removal	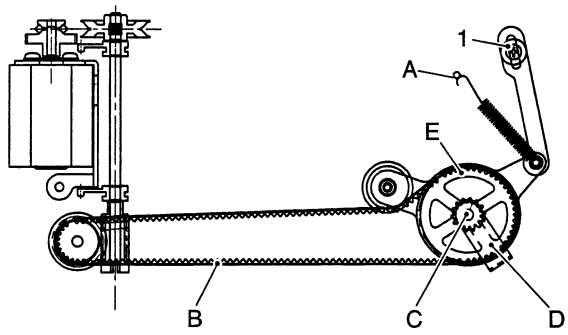 **Fig. 2-7-49**	1. Remove the PR board. (see subsection 1.6.4) 2. Remove spring A, then remove the screw 1 (see Fig. 2-7-49). 3. Remove timing belt B (see Fig. 2-7-49). 4. Remove E-washer C (see Fig. 2-7-49). 5. Remove belt B together with BR arm assembly D and belt gear E (see Fig. 2-7-49).
2	Attaching		1. Attach by reversing the removal procedure, except that the screw 1 should be attached after having attached spring A.
3	Tension adjustment		1. Adjust the timing belt tension as described below. A) Attach spring A. B) Check that timing belt B is under tension, and tighten the screw 1 so that the current tension is maintained.

No.	Item	Reference Diagrams	Procedure

2.7.13 Capstan motor replacement

1	Removal	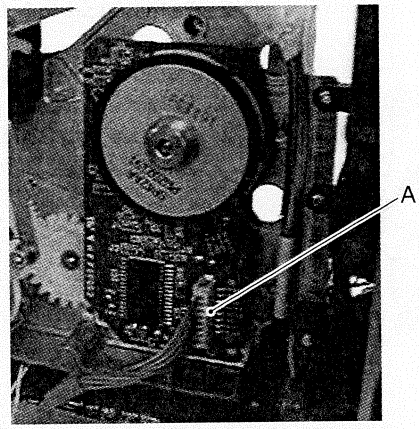 Fig. 2-7-50	1. Remove connector A (on the back side of the main deck) (see Fig. 2-7-50).
		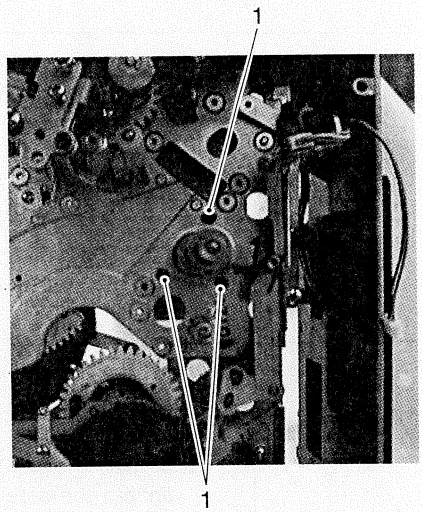 Fig. 2-7-51	2. Remove the three screws 1 then remove the capstan motor (on the back side of the main deck) (see Fig. 2-7-51). The capstan motor can be removed by pulling it out from the back side of the main deck.
2	Attaching		1. Attach by reversing the removal procedure. 2. Adjust the subsection "3.4.1 Capstan FG duty adjustment".

No.	Item	Reference Diagrams	Procedure

2.7.14 Reel motor replacement

1	Removal	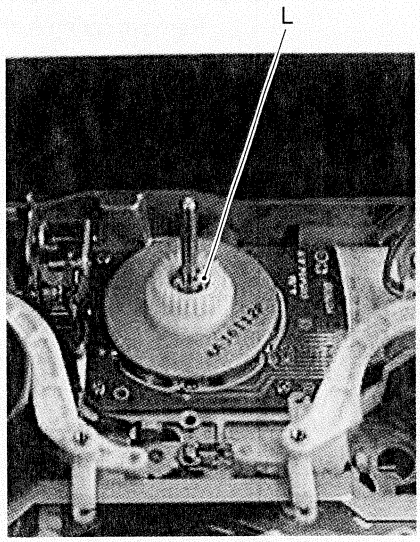 Fig. 2-7-52 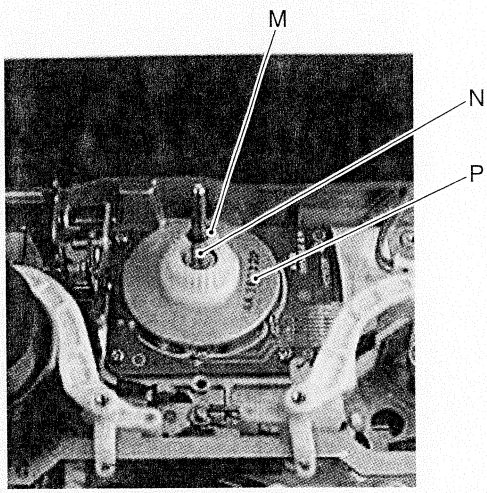 Fig. 2-7-53	1. Remove the supply reel disk (see items 1 to 9 of the subsection "2.6.7 Sub-brake replacement"). 2. Remove the idler arm assembly (see sub section 2.6.4). 3. Remove E-washer L (see Fig. 2-7-52). 4. Remove washer M and spring N, then remove rotor P (see Fig. 2-7-53). **CAUTION** • Be careful when removing the rotor because it is strongly magnetized. 4. Remove the four screws 4, then remove the board of the reel motor (the flat wire is fixed by using double-sided adhesive tape) (see Fig. 2-7-54). 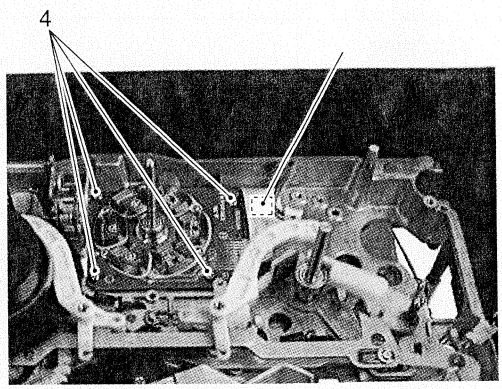 Fig. 2-7-54
2	Attaching		1. Attach by reversing the removal procedure. **CAUTION** • Be careful when attaching the rotor because it is strongly magnetized. • Put the name card or et cetra on the stater and then attach the rotor. After attach the rotor, remove the name card. 2. Adjust the subsection "2.9 TENSION AND TORQUE ADJUSTMENTS".

No.	Item	Reference Diagrams	Procedure

2.7.15 Mode motor replacement

1	Removal	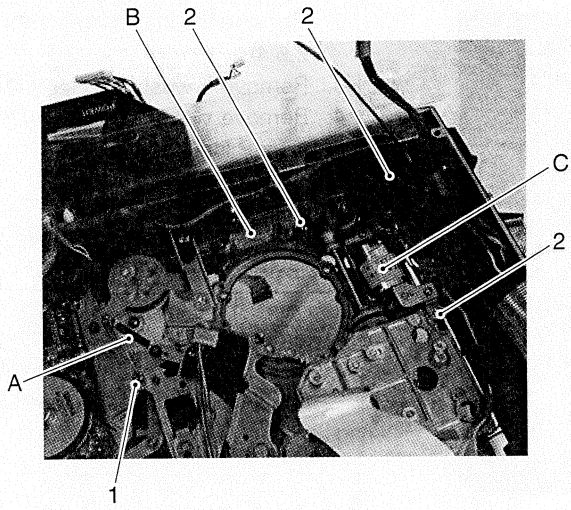 **Fig. 2-7-55**	1. Remove the MAIN board and PR board. 2. Remove spring A, then remove screw 1 (see Fig. 2-7-55). 3. Remove belt B. 4. Remove the three screws 2; this makes it possible to remove the mode motor assembly C.
2	Attaching		1. Attach by reversing the removal procedure. Be sure to adjust the timing belt tension (see subsection 2.7.12).

No.	Item	Reference Diagrams	Procedure

2.7.16 Control cam, roller and pinch cam arm assembly replacement

1	Removal of pinch cam arm assembly	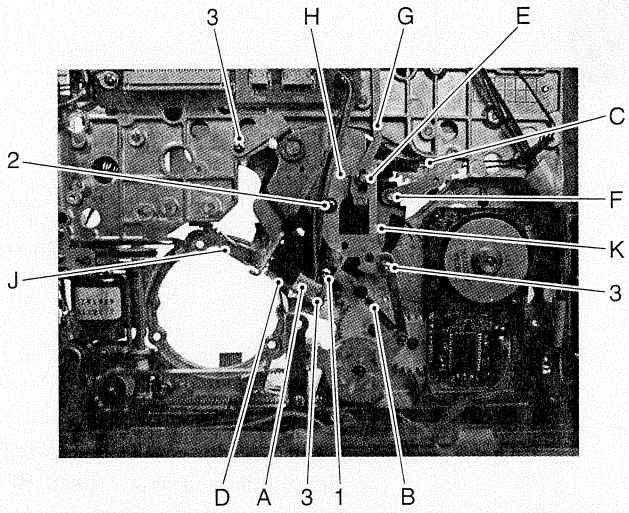 **Fig. 2-7-56**	1. Remove supply loading assembly (see subsection 2.7.5). 2. Remove take-up loading assembly (see subsection 2.7.11). 3. Remove connector A (see Fig. 2-7-56). 4. Remove springs B and C (see Fig. 2-7-56). 5. Remove screw 1, then remove MODE SENS board D (see Fig. 2-7-56). 6. Remove E-washers E and F (see Fig. 2-7-56). 7. Remove screw 2 and three screws 3 (see Fig. 2-7-56). 8. While lifting eject rod G, remove cam bracket assembly H and arm gear (L) assembly J (see Fig. 2-7-56). 9. Pinch cam arm assembly K is also removed at the same time as the above.
2	Removal of control cam	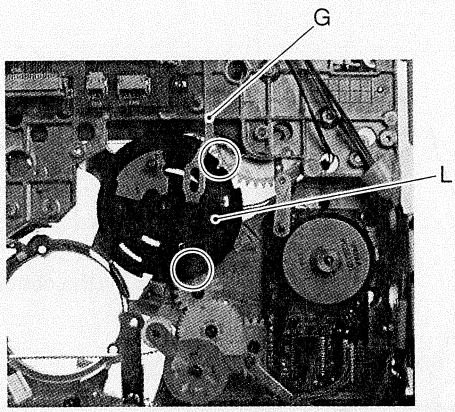 **Fig. 2-7-57**	10. While lifting the eject rod G, remove the control cam L (see Fig. 2-7-57).

No.	Item	Reference Diagrams	Procedure
3	Removal of roller	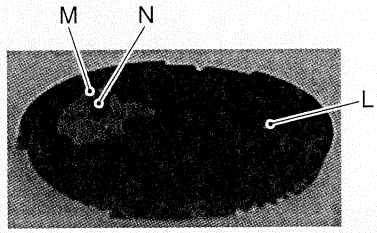 **Fig. 2-7-58**	1. Remove E-washer M; this makes it possible to remove roller N (see Fig. 2-7-58).
4	Attaching roller		1. Attach the roller N by reversing the removal procedure.
5	Attaching the control cam	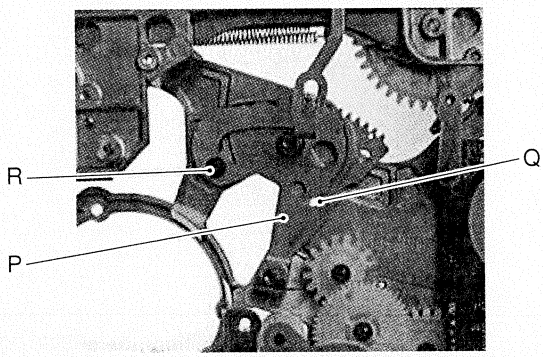 **Fig. 2-7-59** 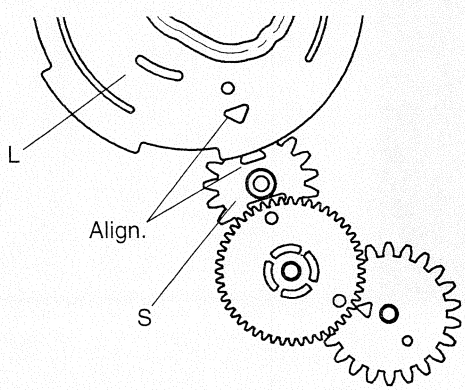 **Fig. 2-7-60**	2. Place arm gear (R) P in the assembling position (so that the hole Q of arm gear (R) P is aligned with the hole on the main deck) (see Fig. 2-7-59). 3. Attach the control cam L in the assembling position (by aligning the small D marking on the cam idler gear S with the D marking on the control cam L) (see Fig. 2-7-60). Also insert stud R of the arm gear (R) into the groove on the control cam.

No.	Item	Reference Diagrams	Procedure
6	Attaching pinch cam arm assembly	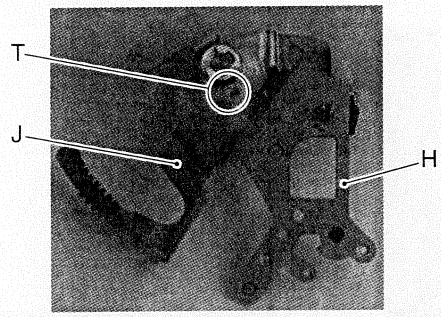 **Fig. 2-7-61**	4. Place cam bracket assembly H and arm gear (L) assembly J in the assembling positions (see Fig. 2-7-61). (Hole T on cam bracket J should be aligned with the hole on arm gear (L) assembly H.)
		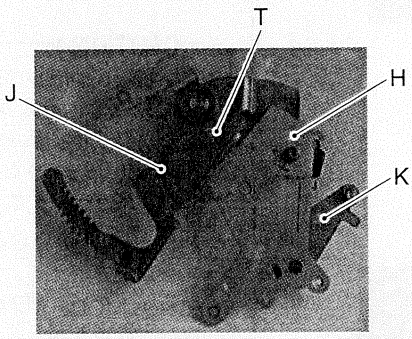 **Fig. 2-7-62**	5. Attach pinch cam arm K (see Fig. 2-7-62).
		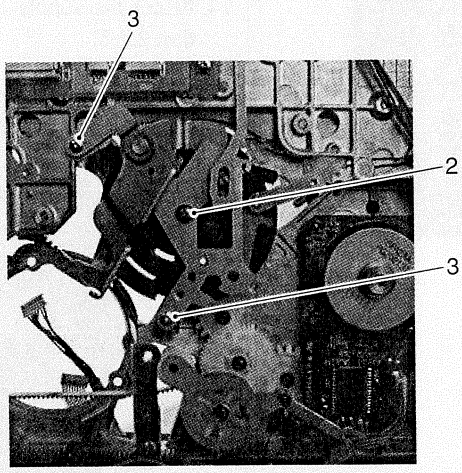 **Fig. 2-7-63**	6. Tighten two screws 3 and 2 (see Fig. 2-7-63).

No.	Item	Reference Diagrams	Procedure

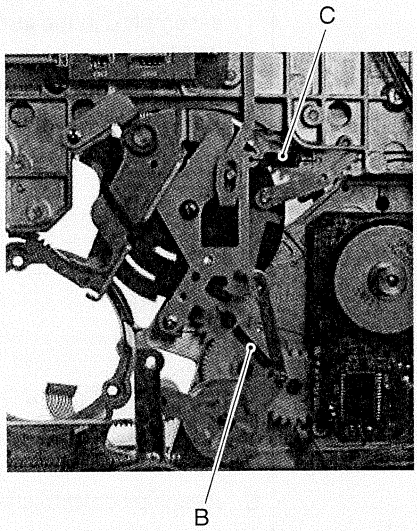

Fig. 2-7-64

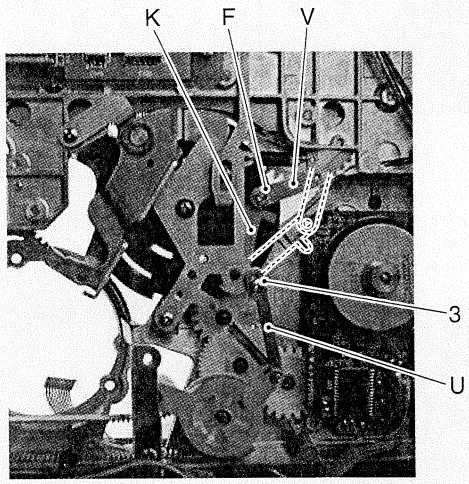

Fig. 2-7-65

7. Attach springs B and C (see Fig. 2-7-64).

8. Secure the adjust lever assembly U using the screw 3 (see Fig. 2-7-65).
9. Attach S-plate assembly V and pinch cam arm assembly K using E-washer F.

CAUTION

- The pinch cam arm assembly must be attached as shown in the diagram. If it is attached as shown by the dotted lines in Fig. 2-7-65, it will be impossible to crimp the pinch roller.

10. Attach eject rod G using E-washer E (see Fig. 2-7-66).
11. Attach MODE SENS board D using the screw 1 (see Fig. 2-7-66).
12. Attach the connector A (see Fig. 2-7-66).
13. Attach the take-up loading assembly (seesub section 2.7.11).
14. Attach the supply loading assembly (see subsection 2.7.5)

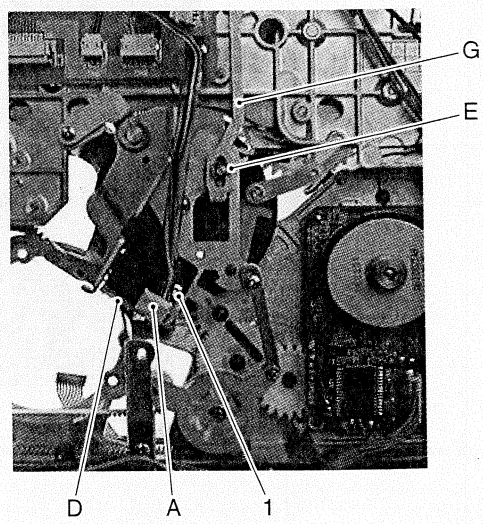

Fig. 2-7-66

No.	Item	Reference Diagrams	Procedure

2.7.17 Full erase head replacement

1	Removal	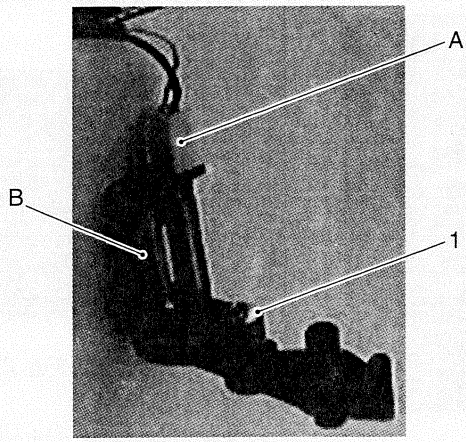 **Fig. 2-7-67**	1. Remove the full erase head assembly (see subsection 2.7.5 item No. 1). 2. Remove connector A (see Fig. 2-7-67). 3. Remove the screw 1; this makes it possible to remove the full erase head B (see Fig. 2-7-67).
2	Attaching		1. Attach by reversing the removal procedure. The tighten torque of screw 1 should be 0.59 N-m (6 kg f·cm). **CAUTION** • The full erase head must be tightened with the specified securing torque. Otherwise it will not be possible to achieve the specified precision in the full erase head attaching angle (vertical). If the full erase head is attached at an angle which is out of specification, the tape transport is affected, resulting in an alteration to the RF output waveform or in the wrinkling or twisting of the tape. 2. Check the transport system (see subsection 2.11). Particularly, ensure that the tape is not wrinkled or twisted around the supply guide roller or the full erase head guide roller and that the RF output waveform is not altered.

No.	Item	Reference Diagrams	Procedure

2.7.18 Rubber tire replacement

1	Removal of supply rubber tire	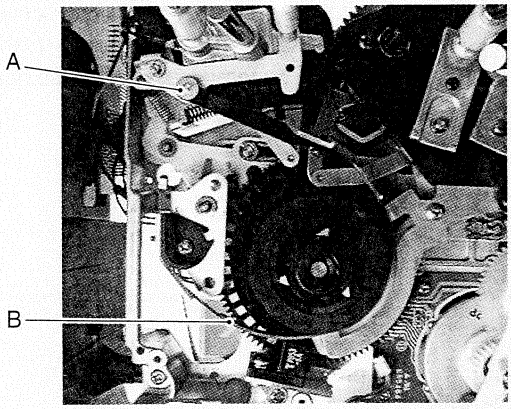 Fig. 2-7-68	1. Remove slit washer A then remove supply tension band B (see Fig. 2-7-68). 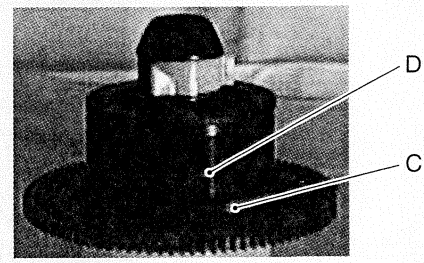 Fig. 2-7-69 2. Remove supply rubber tire C from the supply reel disk D (see Fig. 2-7-69).
2	Removal of take-up rubber tire	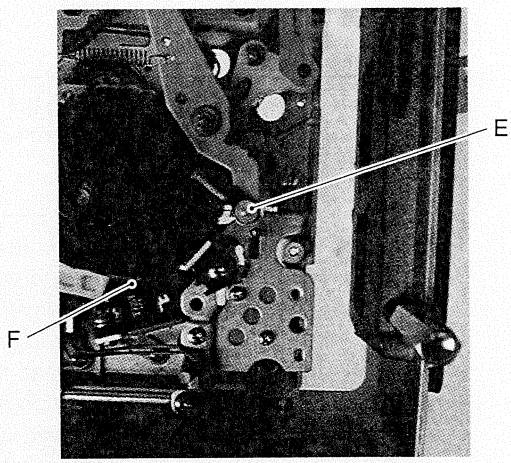 Fig. 2-7-70	3. Remove slit washer E then remove take-up tension band F (see Fig. 2-7-70). 4. Remove take-up rubber tire G from the take-up reel disk H (see Fig. 2-7-71). 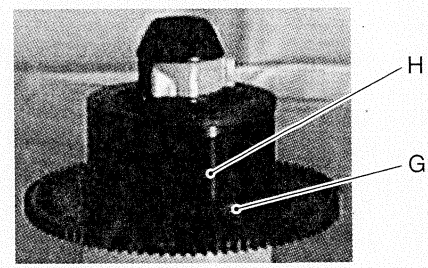 Fig. 2-7-71
3	Attaching supply rubber tire		1. Attach by reversing the removal procedure.
4	Attaching take-up rubber tire		2. Attach by reversing the removal procedure.

2.8 MECHANISM ASSEMBLING POSITION

Some mechanical parts of this unit do not function correctly unless they are attached with the specified positioning after replacement. The position of the mechanism that makes possible the attachment or checks of the positioning of these parts is referred to as the assembling position. The unit has been designed so that the markings on the gears are aligned correctly when the mechanism is in this position. The methods for placing the mechanism in the assembling position include "placing gears by turning them manually as shown in Fig. 2.8.1 ", and so on. This section describes the attaching positions of the gears when the mechanism is in the assembling position.

2.8.1 Pinch idle gear, connect gear, cam idle gear

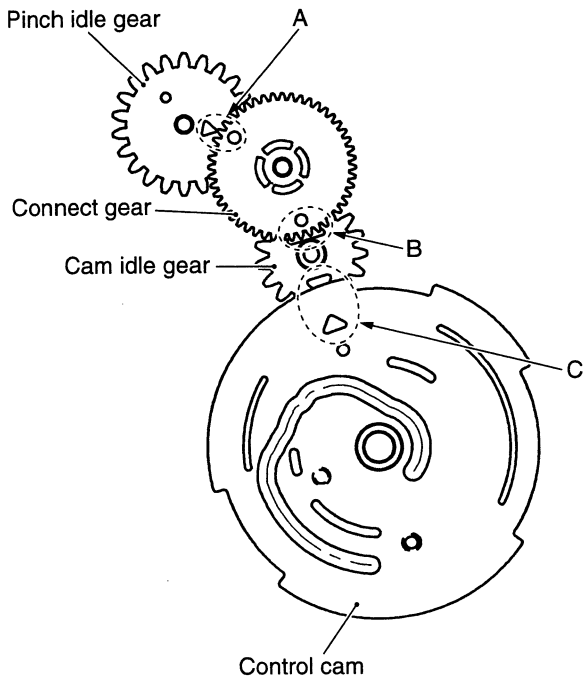

A : Align the △ marking on the pinch idle gear and o marking on the connect gear.
B : Align the larger △ marking on the cam idle gear with the o marking on the connect gear.
C : Align the smaller △ marking on the cam idle gear with the △ marking on the control cam.

Fig. 2-8-1 Gear Positioning 1 (Bottom Panel Side)

2.8.2 Arm gear (L), loading arms (L) (R), Geneva gear

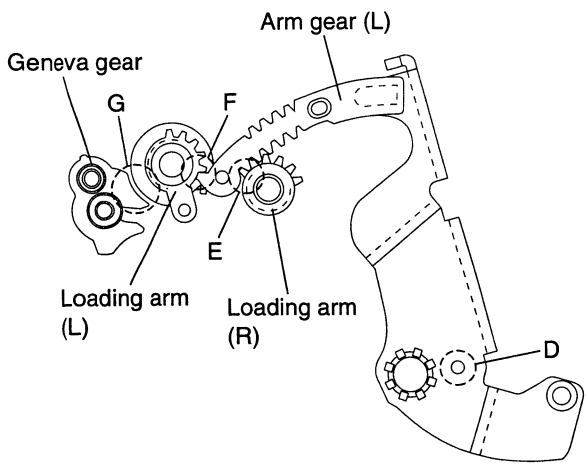

D : The hole on the arm gear (L) should be aligned with the hole on the part below it when viewed from below.
E : Align the gear end of the loading arm (R) with the end of the groove on the arm gear (L).
F : Engage the gear end of the loading arm (L) with the end of the arm gear (L) as shown in the diagram.
G : Align the R section of the Geneva gear with the loading arm (L).

Fig. 2-8-2 Gear Positioning 2 (Perspective View from Above)

2.8.3 Arm gear (R), arm (D)

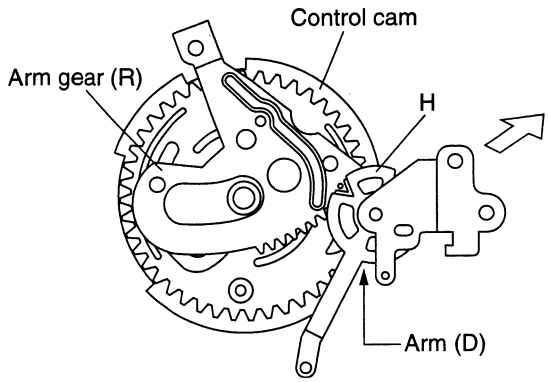

H : Align the hole on the arm gear (R) with the notch on the arm (D).The bracket of the arm (D) should be pushed in the direction of the arrow before securing the screw.

Fig. 2-8-3 Gear Positioning 3 (Perspective View from Above)

2.8.4 Second cam, direction plate

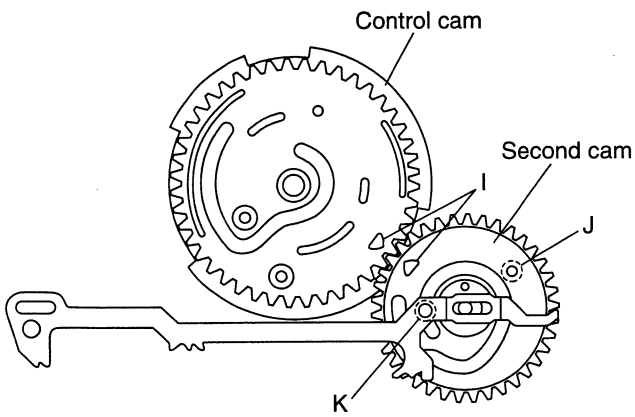

I : Align the △ markings on the control cam and second cam.
J : The holes on the second cam and the main deck should be aligned.
K : Insert the stud of the direction plate into the groove on the inner side of the second gear.

Fig. 2-8-4 Gear Positioning 4 (Perspective View from Above)

2.8.5 Pinch roller assembly, cam bracket

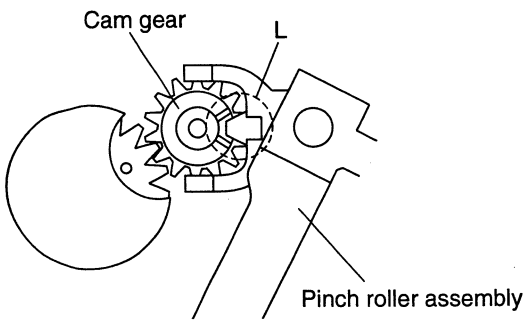

L : Orient the notch on the cam gear toward the right. Insert the stud of the pinch roller assembly into the notch on the cam gear.

Fig. 2-8-5 Gear Positioning 5 (Top Side View)

No.	Item	Measuring instrument & Input signals	Mode	Measuring point (◎) Adjustment parts (①) Adjustment level (☆)	Adjustment procedure

2.9 TENSION AND TORQUE ADJUSTMENTS

The rotation torque of the reel motor can be adjusted in the DIAG mode by using the Group 7 adjustment menus.
To protect the cassette torque meter, the tape is transported by the capstan motor drive during the torque adjustment operations, even when the FF/REW button is pressed.

1	Unloading torque adjustment	Cassette torque meter PUJ42881B	DIAG mode "61 : .-- --"	◎ Cassette torque meter: Supply side, indicated value ① "OPERATE" + "FF" : Torque Up "OPERATE" + "REW" : Torque Down ☆ 0.015 N·m (150 gf·cm ± 20 gf·cm)	1. Execute DIAG mode "61 : .-- --" (see the section 1.9). 2. Install the cassette torque meter. 3. Press the REW button. (Rotates the supply reel at the unloading torque.) 4. While holding the OPERATE button depressed, press the FF or REW button to adjust the supply torque within the specified range. 5. Press the DATA SET button. The adjusted data is stored in the memory and "61 :Ed·00 xx" is displayed (where "xx" shows the adjusted data).
2	Reverse torque adjustment	Cassette torque meter PUJ42881B	DIAG mode "5F: .-- --"	◎ Cassette torque meter: Supply side, indicated value ① "OPERATE" + "FF": Torque Up "OPERATE" +"REW" : Torque Down ☆ 0.01 N·m (110 gf·cm ± 20 g-cm) ◎ Cassette torque meter: Take-up side, indicated value ① Retaining screw of the take-up tension band ☆ 0.0035 N·m (36 ± 5 gf·cm)	1. Execute DIAG mode "5F: .-- --" (see the section 1.9). 2. Install the cassette torque meter. 3. Press the REW button. (Initiates the search reverse x 1 mode.) 4. While holding the OPERATE button depressed, press the FF or REW button to adjust the supply torque within the specified range. 5. Press the DATA SET button. The adjusted data is stored in the memory and "5F:Ed·00 xx" is displayed (where "xx" shows the adjusted data). 6. Check that the take-up reel disk torque of the cassette torque motor is at the adjustment level. 7. If the value is not within the adjustment level range, remove the cassette torque meter and adjust the installation angle of the take-up tension band (see Fig. 2-9-1). 8. Install the cassette torque meter again and press the REW button. 9. Repeat steps 6 to 8 above to adjust within the correct adjustment range. 10. Press the RESET button to terminate the adjustment.

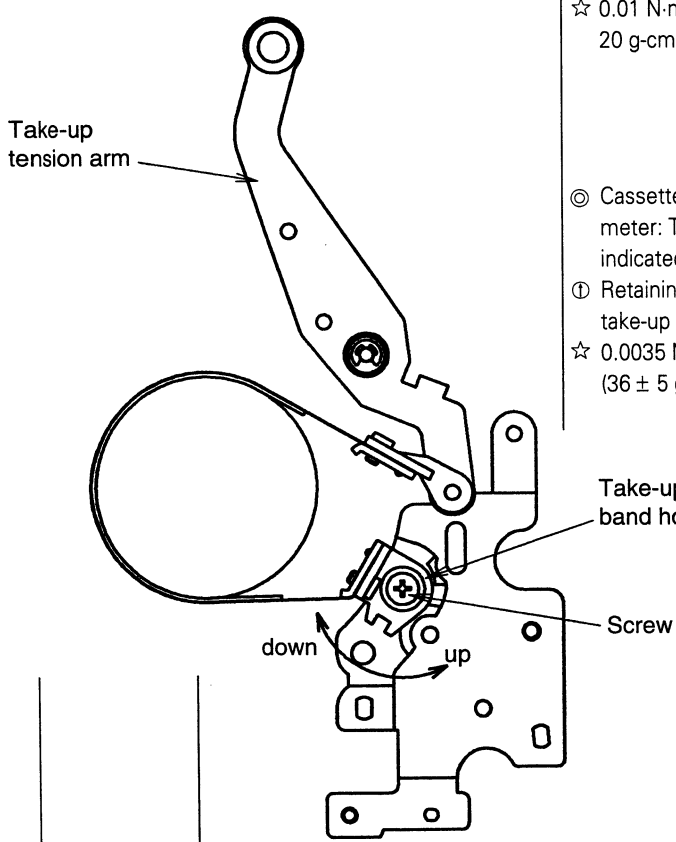

Fig. 2-9-1

No.	Item	Measuring instrument & Input signals	Mode	Measuring point (◎) Adjustment parts (①) Adjustment level (☆)	Adjustment procedure
3	Play torque adjustment	Cassette torque meter PUJ42881	DIAG mode "62: .-- --"	◎ Cassette torque meter: Take-up side, indicated value ① "OPERATE" + "FF": Torque Up "OPERATE" +"REW": Torque Down ☆ 0.01 N·m (100 gf·cm ± 20 gf·cm) ◎ Cassette torque meter: supply side, indicated value ① Retaining screw of the supply tension band ☆ 0.0036 N·m (37 ±5 gf·cm)	1. Execute DIAG mode "62: .-- --" (see the section 1.9). 2. Install the cassette torque meter. 3. Press the PLAY button. (Rotates the take-up reel at the forward transport torque.) 4. While holding the OPERATE button depressed, press the FF or REW button to adjust the take-up torque within the specified range. 5. Press the DATA SET button. The adjusted data is stored in the memory and "62:Ed·00 xx" is displayed (where "xx" shows the adjusted data). 6. Check that the supply reel disk torque of the cassette torque meter is at the adjustment level. 7. If the value is not within the adjustment level range, remove the cassette torque meter and adjust the installation angle of the supply tension band (see Fig. 2-9-2). 8. Install the cassette torque meter again and press the PLAY button. 9. Repeat steps 6 to 8 above to adjust within the correct adjustment range. 10. Press the RESET button to terminate the adjustment.

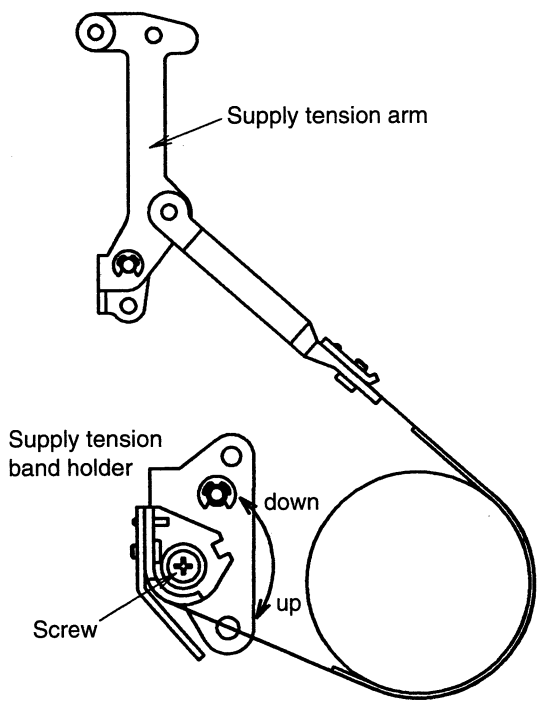

Fig. 2-9-2

2.10 ADJUSTMENT OF INTERCHANGEABILITY

[CAUTION]

- Proceed to the following adjustment after having completed subsection "3.5 SERVO SYSTEM ADJUSTMENT" and subsection "2.9 REEL SERVO CIRCUIT ADJUSTMENT".

2.10.1 Interchange ability adjustment flowchart

Fig. 2-10-1 shows the flowchart of the interchangeability adjustment.

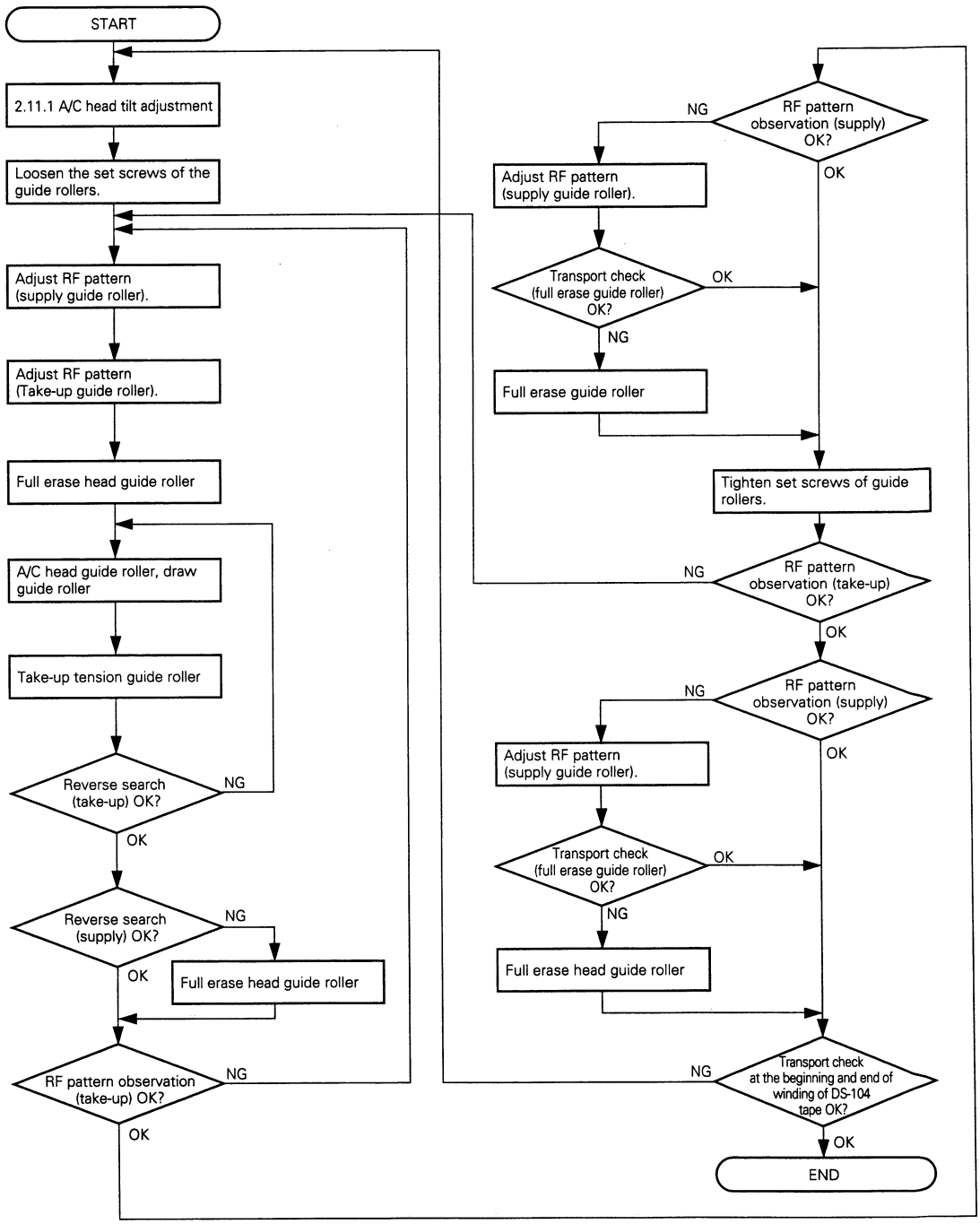

Fig. 2-10-1 Compatibility Adjustment Flowchart

2.10.2 Check of tape transport system

Each guide roller has flanges above and below it in order to limit the tape transport. Tape limiting by means of the upper flange is referred to as upper edge limitation and that achieved by means of the lower flange is referred to as lower edge limitation. The tape is usually stabilized during transport by alternately applying upper and lower edge limitations. As a lack of limitation makes the tape transport unstable, please apply limitations as shown in the following table.

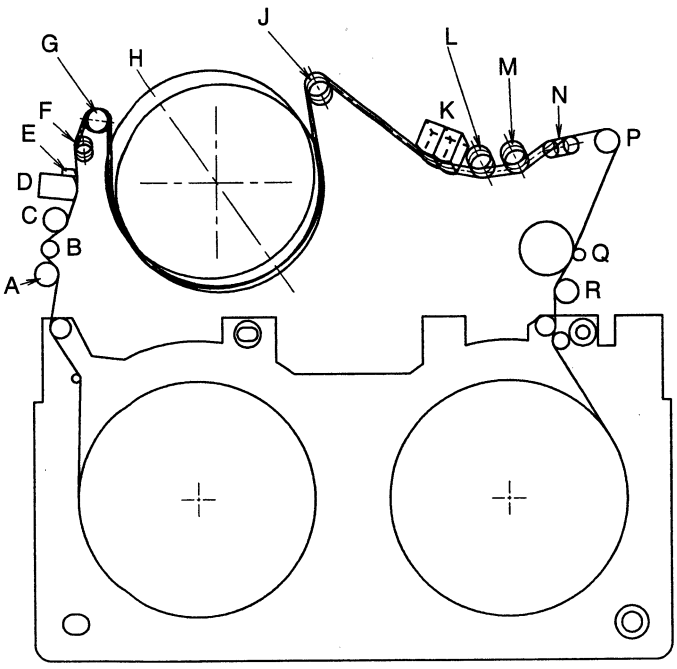

Fig. 2-10-2

Symbol	Name	Limitation
A	1st guide roller	Non-limit
B	Supply tension pole	Non-limit
C	Full erase head guide roller	Tape's lower edge limit
D	Full erase head	Non-limit
E	Tape scraper	Non-limit
F	Supply slant pole	Non-limit
G	Supply guide roller	Tape's upper edge limit
H	Drum assembly	Tape's lower edge limit
J	Take-up guide roller	Tape's upper edge limit
K	A/C head assembly	Non-limit
L	A/C head guide roller	Tape's lower edge limit
M	Middle guide roller	Non-limit
N	Take-up slant pole	Non-limit
P	Draw guide roller	Tape's upper edge limit
Q	Capstan	Non-limit
R	Take-up tension roller	Non-limit

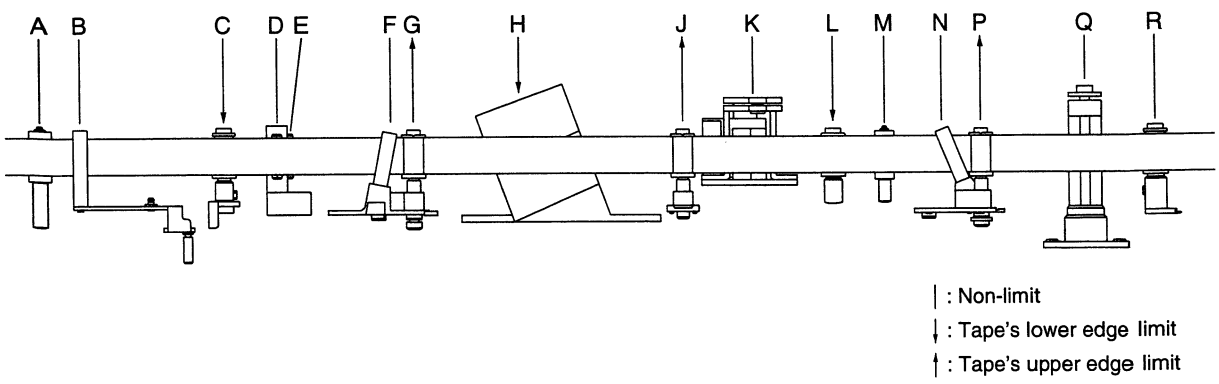

Fig. 2-10-3 View from Cassette Tape Insertion Side

No.	Item	Measuring instrument & Input signals	Mode	Measuring point (◎) Adjustment parts (①) Adjustment level (☆)	Adjustment procedure

2.10.3 Interchangeability adjustment

1	Preparation				1. Remove the side cover and bottom cover. 2. Loosen the set screws of the guide rollers. Loosen each screw fully then tighten slightly to a tightness which enables adjustment. Before interchangeability adjustment, tighten the set screws until tip reaches to the guide roller shaft, then tighten about +15 degrees further. There is no need to tighten the set screws after finished interchangeability adjustment. If tighten the set screws, the adjusted point will be changed. 3. Switch auto tracking off with DIAG menu (4:AL tr)
2	Supply guide roller and take-up guide roller adjustments	Oscilloscope (V-rate, 10:1) Ext. TRIG.: HID [I/O JUNC] Alignment tape (MSHP)	PLAY	◎ RF2 [I/O JUNC] ◎ GND [I/O JUNC] ① TRACKING (VR1) [MT BOARD] ① Supply guide roller Take-up guide roller ☆ The waveform should be flat.	1. Adjust the A/C head tilt and height (see 2.11.1, 2.11.2). 2. Play alignment tape MSHP. 3. Connect the test point (RF2) of the I/O JUNC board to the oscilloscope. 4. While observing the RF waveform, adjust the TRACKING potentiometer of the MT board. 5. While observing the waveforms, rotate the supply guide roller and take-up guide roller so that the respective waveforms are flat (see Fig. 2-10-5 and 6). **Special Technique** The waveform should be adjusted to become flat in order to stabilize any fluctuations. 6. When the waveforms become flat, rotate the TRACKING potentiometer to maximize the peak values. 7. Rotate the TRACKING potentiometer in a clockwise direction when viewed from the top (in a direction of arrow in Fig. 2-10-4), so that the levels are decreased by 6 dB from the peak values. 8. Fine adjust the supply guide roller and take-up guide roller heights again so that the respective waveforms are flat.

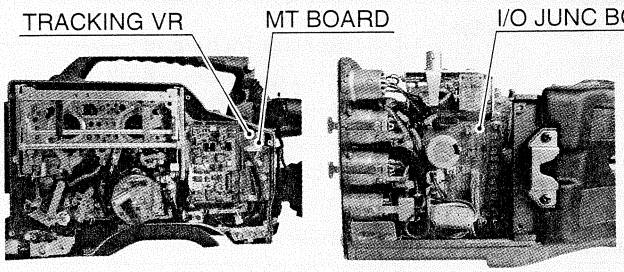

Fig. 2-10-4

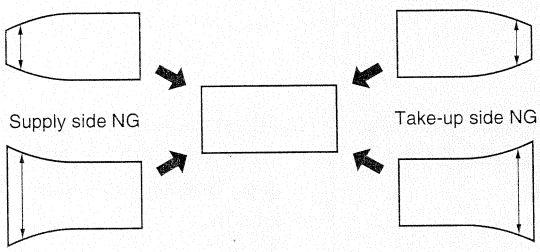

Fig. 2-10-5

① TRACKING (VR1) [MT board]
☆ 6 dB (1/2) lower level.
① Supply guide roller
① Take-up guide roller
☆ The waveform should be flat.

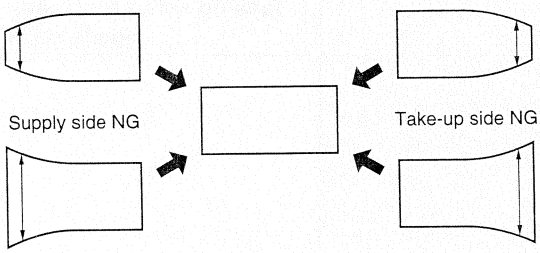

Fig. 2-10-6

No.	Item	Measuring instrument & Input signals	Mode	Measuring point (◎) Adjustment parts (①) Adjustment level (☆)	Adjustment procedure
		Digital S tape (DS104)	PLAY	① Full erase head guide roller ☆ Tape's lower edge limit	9. Adjust the full erase head guide roller so that tape's lower edge limit is applied. **Special Technique** **Tape's lower edge limit:** Move the guide roller up until the tape contacts the lower flange of the guide roller and starts to produce wrinkles, then move the guide roller slowly down until the wrinkles disappear.

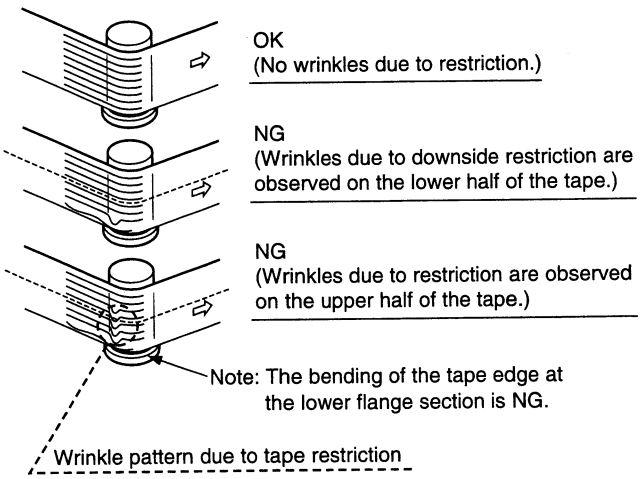

Fig. 2-10-7

				① A/C head guide roller ☆ Tape's lower edge limit	10. Adjust the A/C head guide roller so that tape's lower edge limit is applied (see Fig. 2-10-7 and "Special Technique - tape's lower edge limit"). **Special Technique** When the mode is changed from Loading to Play or Search Rev. to Play and also when the F.E HEAD is flipped by the finger, it should be confirmed if the RF envelope is stabilized within one second. **When the RF envelope is not stabilized within one second, adjust the following:** **Supply side : Finely adjust the supply guide roller down and the full erase head guide roller up.** **Take-up side: Finely adjust the Take-up guide roller down.**

No.	Item	Measuring instrument & Input signals	Mode	Measuring point (◎) Adjustment parts (①) Adjustment level (☆)	Adjustment procedure
3	Draw guide roller adjustment	Digital S tape (DS104)	PLAY	① Draw guide roller ☆ Tape's upper edge regulation	11. Adjust the draw guide roller so that tape's upper edge regulation is applied. **Special Technique** **Tape's upper edge regulation:** Move the guide roller down until the tape contacts the upper flange of the guide roller and starts to produce wrinkles, then move the guide roller slowly up until the wrinkles disappears
				① A/C head guide roller ☆ Downside restriction	12. Check that tape's lower edge regulation is applied to the A/C head guide roller. If there is no tape's lower edge regulation, adjust the A/C head guide roller height (step 10) then repeat steps 11 and 12.
4	Take-up tension roller adjustment	Digital S tape (DS104)	PLAY	◎ Take-up tension roller ① Take-up tension roller ☆ No wrinkles	13. Adjust the take-up tension roller so that the tape is located between its upper and lower flanges and no wrinkles are observed on the tape.

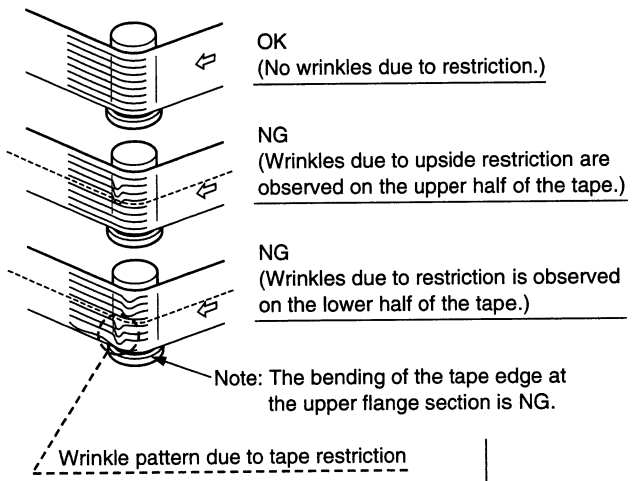

Fig. 2-10-8

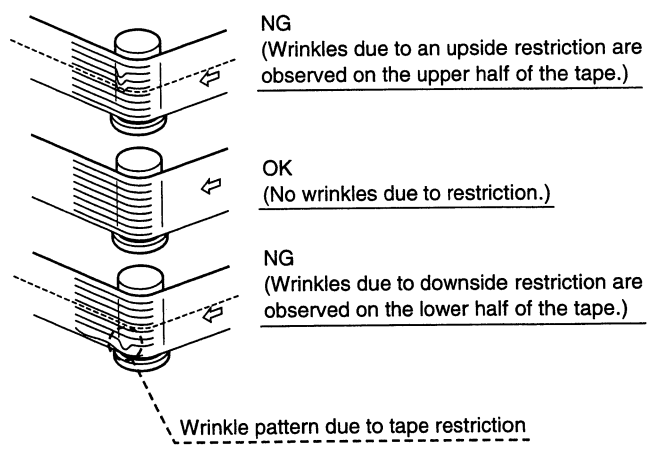

Fig. 2-10-9

No.	Item	Measuring instrument & Input signals	Mode	Measuring point (◎) Adjustment parts (ⓣ) Adjustment level (☆)	Adjustment procedure
5	Check	Digital S tape (DS104)	Search, REV	◎ RF1[I/O JUNC] ◎ Between pinch roller and draw guide roller ⓣ Draw guide roller ☆ No twist and no wrinkles ◎ Full erase head guide roller ⓣ Full eerase head guide roller ☆ No twist and no wrinkles	14. Initiate reverse search mode. 15. Check that the tape is not twisted between the pinch roller and the draw guide roller and that it is not wrinkled by the A/C head guide roller. If tape twist or wrinkles are observed, fine adjust the draw guide roller height then check the adjustments in steps 11 to 13. 16. Check that the tape is not wrinkled by the full erase head guide roller. If tape wrinkles are observed, fine adjust the full erase head guide roller height.
		Digital S tape (DS124)	PLAY	◎ Take-up tension roller ⓣ Take-up tension roller ☆ No damage	17. Playback the digital S tape. 18. Check that the tape is not damaged by the Take-up tension roller. If tape damage is observed, fine adjust the Take-up tension roller height. 19. Initiate PLAY mode. 20. Observe the RF waveform and check that it is flat. 21. Check that the positive going of the RF waveform is normal between loading and play and between reverse search and play. If it is abnormal, restart adjustments from step 7. 22. Tighten the set screws of the guide rollers. 23. Perform the same checking as for steps 20 and 21. 24. Using the digital S tape (DS104), initiate play at the beginning of winding, initiate reverse search at the end of winding, and check that the tape is not twisted or wrinkled by the guide rollers. If tape twist or wrinkles are observed, review the adjustments from step 1 and repeat the required adjustments.
		Alignment tape MSHP	PLAY	◎ RF2 [I/O JUNC]	
		Digital S tape (DS104)			

No.	Item	Measuring instrument & Input signals	Mode	Measuring point (◎) Adjustment parts (①) Adjustment level (☆)	Adjustment procedure

2.11 A/C HEAD ADJUSTMENTS

As the A/C head adjustments affect other adjustments in some degree, the adjustments should be repeated until all of the standards are met simultaneously.

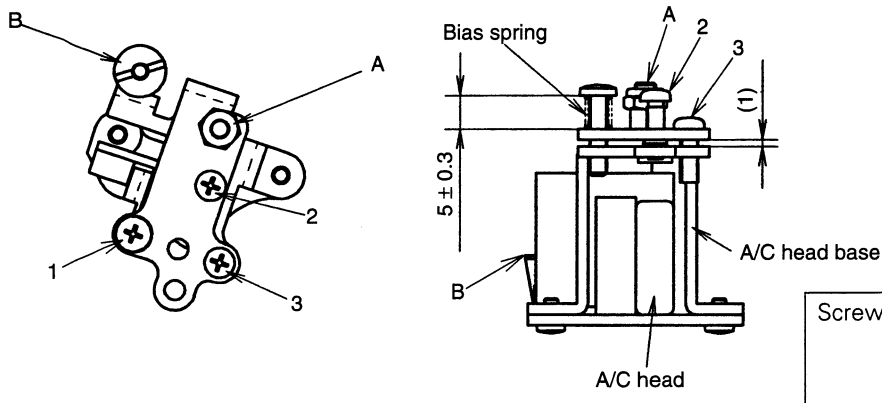

Fig. 2-11-1 A/C Head Adjustment Screws

Screw	1	Fixed at the position shown in diagram.
	2	For use in the tilt adjustment.
	3	For use in the azimuth adjustment.
Nut	A	For use in the height adjustment.
	B	For use in the X-value adjustment.

1	A/C head tilt adjustment	Parallelism check plate PGJ40767-2 or PGJ04035 or PUJ50204 or PGJ04039	–	◎ A/C head tilt ① Screw 2 ☆ Should be parallel with the A/C head guide roller.	1. Apply the flat-plane surface of the parallel check plate onto the A/C head guide roller. 2. While maintaining the above condition, bring the parallel check plate slowly in contact with the A/C head. 3. Ensure that there is no clearance between the A/C head and the plate at both the upper and lower edges. 4. If clearance is observed, adjust the screw 2 to remove clearance.

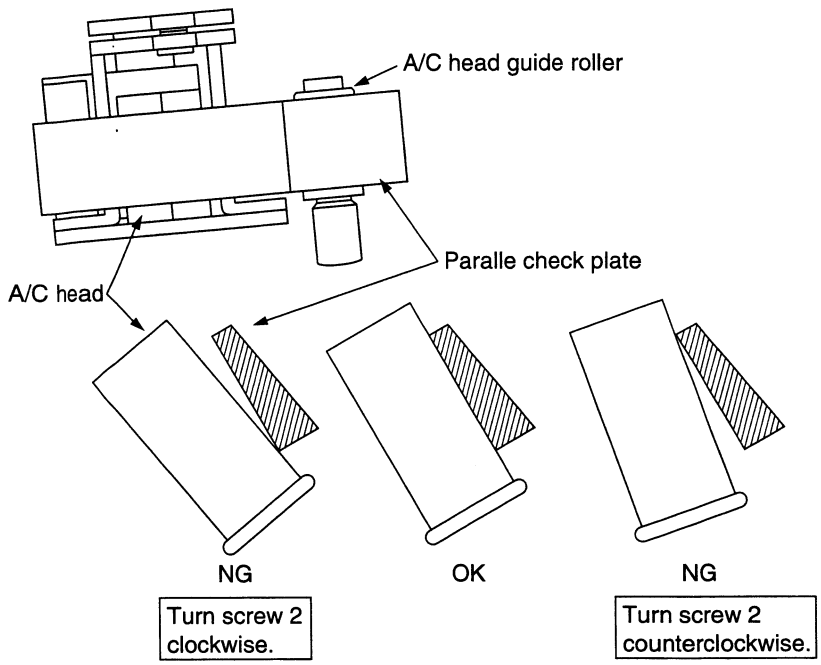

Fig. 2-11-2 A/C Head Inclination Adjustment

No.	Item	Measuring instrument & Input signals	Mode	Measuring point (◎) Adjustment parts (①) Adjustment level (☆)	Adjustment procedure
2	A/C head height Pre-adjustment	Digital S Tape (DS104)	PLAY mode	◎ A/C head height ① Nut A ☆ The CTL head should be partially visible, for about 0.5 mm, below the lower edge of the tape.	1. Initiate PLAY mode. 2. Check that the tape is running along the lower flange of the A/C head guide roller. If tape wrinkle is observed, adjust the roller height to remove it. 3. Adjust nut A to the adjustment level.

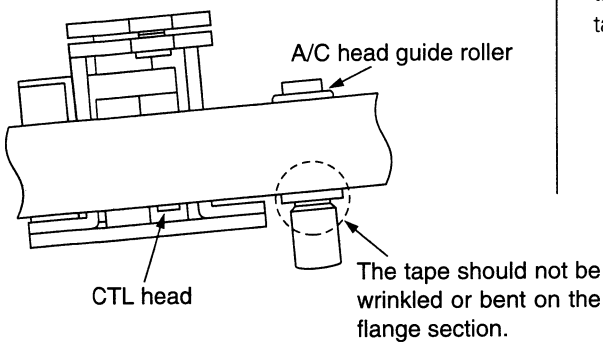

Fig. 2-11-3 A/C Head Height Preliminary Setting Position

3	A/C head azimuth adjustment	Oscilloscope, alignment tape, MHP: for U-ver. MHPE: for E-ver.	PLAY mode, DIAG mode "58: .-- --"	◎ TP731 (CH-1) [AUDIO & LCD] TP732 (CH-2) [AUDIO & LCD] or LINE OUT (XLR 5-pin) [REAR PANEL] ① Screw 3 ☆ CH1 and CH2 should be in-phase and their levels should be maximum.	1. Execute DIAG mode "58: .-- --" (see subsection 1.9). 2. Initiate PLAY mode. 3. Check that the tape is running along the lower flange of the A/C head guide roller. If tape wrinkle is observed, adjust the roller height to remove it. 4. Adjust the screw 3 so that the CH1 and CH2 audio output levels are at the level. 5. Check the A/C head tilt. If the angle is erroneous, re-adjust it and adjust the azimuth again (see sub section 2.11.1).

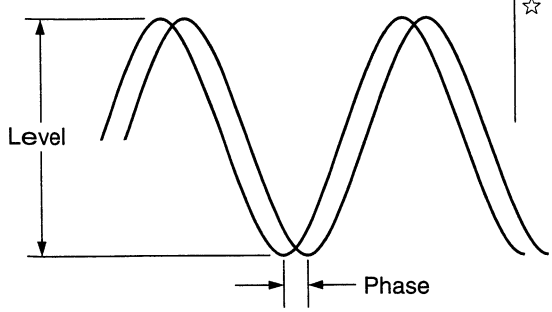

Fig. 2-11-4 Audio Output Waveforms

4	A/C head height adjustment	Oscilloscope alignment tape MBA-3: for U-ver. MBAE-3: for E-ver.	PLAY mode, DIAG mode "58: .-- --"	◎ TP731 (CH-1) [AUDIO & LCD] TP732 (CH-2) [AUDIO & LCD] or LINE OUT (XLR 5-pin) [REAR PANEL] ① Nut A ☆ Adjust the CH1 and CH2 level to minimize first, then turn the nut A to the clockwise (45 degree).	1. Execute DIAG mode "58: .-- --" (see subsection 1.9). 2. Initiate PLAY mode. 3. Adjust nut A to minimize the CH1 and CH2 audio output levels. (see Fig. 2-11-5) 4. Turn the nut A to the clockwise (45 degree).

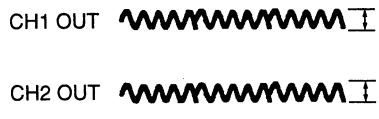

Fig. 2-11-5 Audio Output Waveforms

No.	Item	Measuring instrument & Input signals	Mode	Measuring point (◎) Adjustment parts (①) Adjustment level (☆)	Adjustment procedure
5	X-value adjustment	Oscilloscope (V-rate) alignment tape (MSHP-X)	PLAY mode DIAG mode "67: .-- --"	◎ TP2: RF1 TP1: GND TP5: FRP [I/O JUNC] ① Nut B ☆ The RF1 waveform should be maximum and the phases at the FRP and the non-recorded section should be as shown below.	1. Remove the bottom cover (see subsection 1.2.4). 2. Execute DIAG mode "67: .-- --" (see subsection 1.9). 3. Initiate PLAY mode. 4. Adjust nut B for the adjustment level.

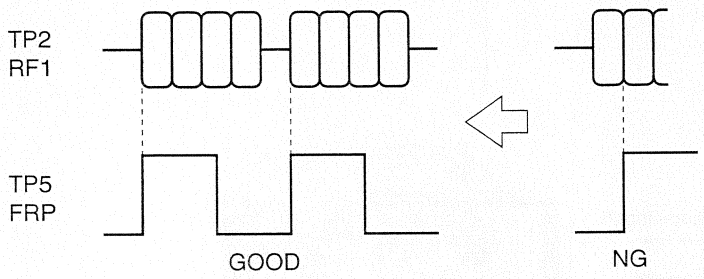

Fig. 2-11-6 Audio Output Waveforms

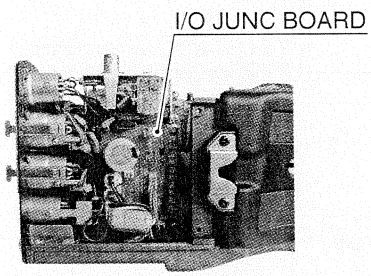

Fig. 2-11-7

No.	Item	Measuring instrument & Input signals	Mode	Measuring point (◎) Adjustment parts (①) Adjustment level (☆)	Adjustment procedure

2.12 CHECK OF LINEARITY

[CAUTION] • Proceed to the linearity check after having completed the mechanism adjustments and the tracking preset adjustment.

1	Connection	PC Linearity checker : KLJ0171 RS-232C connection cable: KLJ0123-2 Alignment tape "MSHP" "MSHP-X"	DIAG mode (There is no need to select the menu.)	◎ TRM [I/O JUNC] ◎ HID [I/O JUNC]	1. Connect the cable from the A/D card to the TRM(signal) and HID (trigger) test point on top of the I/O JUNC board. Remove the cap located on the side of the DY-90 and connect the pin jack of the RS-232C cable(KLJ0123-2) to the service connector. Connect the 4 pin connector to the DC out connector on the rear side. 2. For the connection of other cables, refer to the instruction manual provided with the linearity checker. 3. Boot the PC and set the DY-90 to the DIAG mode.

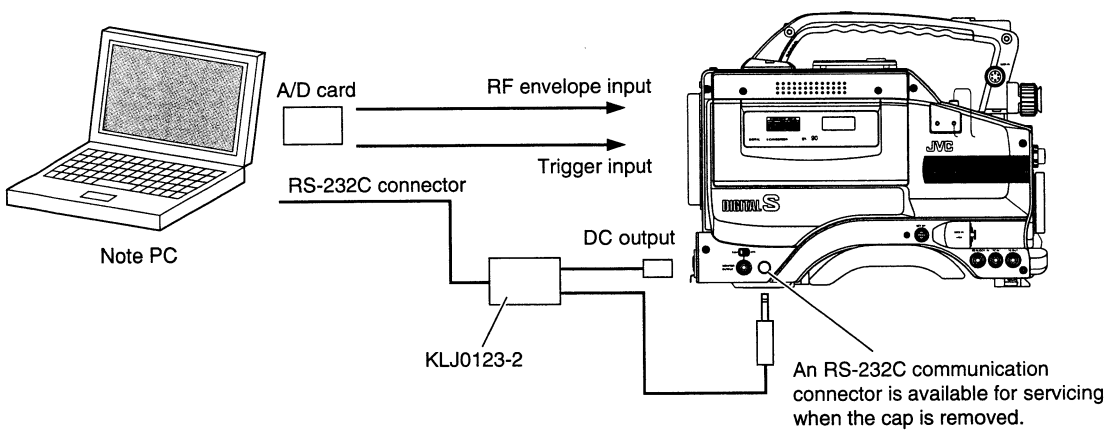

Fig. 2-12-1

2	Check			☆ No more than 5 µm	4. Execute the linearity check program on the PC. For the operating instructions, refer to the instruction manual provided with the A/D board. 5. Check that the measured linearity value is no more than 5 micro. If it is more than 5 µm, perform the subsection "2.10 ADJUSTMENT OF INTERCHANGEABILITY" again, and then measure the linearity again. **Note:** Install all external equipment and place the set in a vertical position before carrying out checking.

SECTION 3
ELECTRICAL ADJUSTMENT

3.1 ELECTRICAL ADJUSTMENT FLOWCHART

3.1.1 Electrical adjustment flowchart for camera section

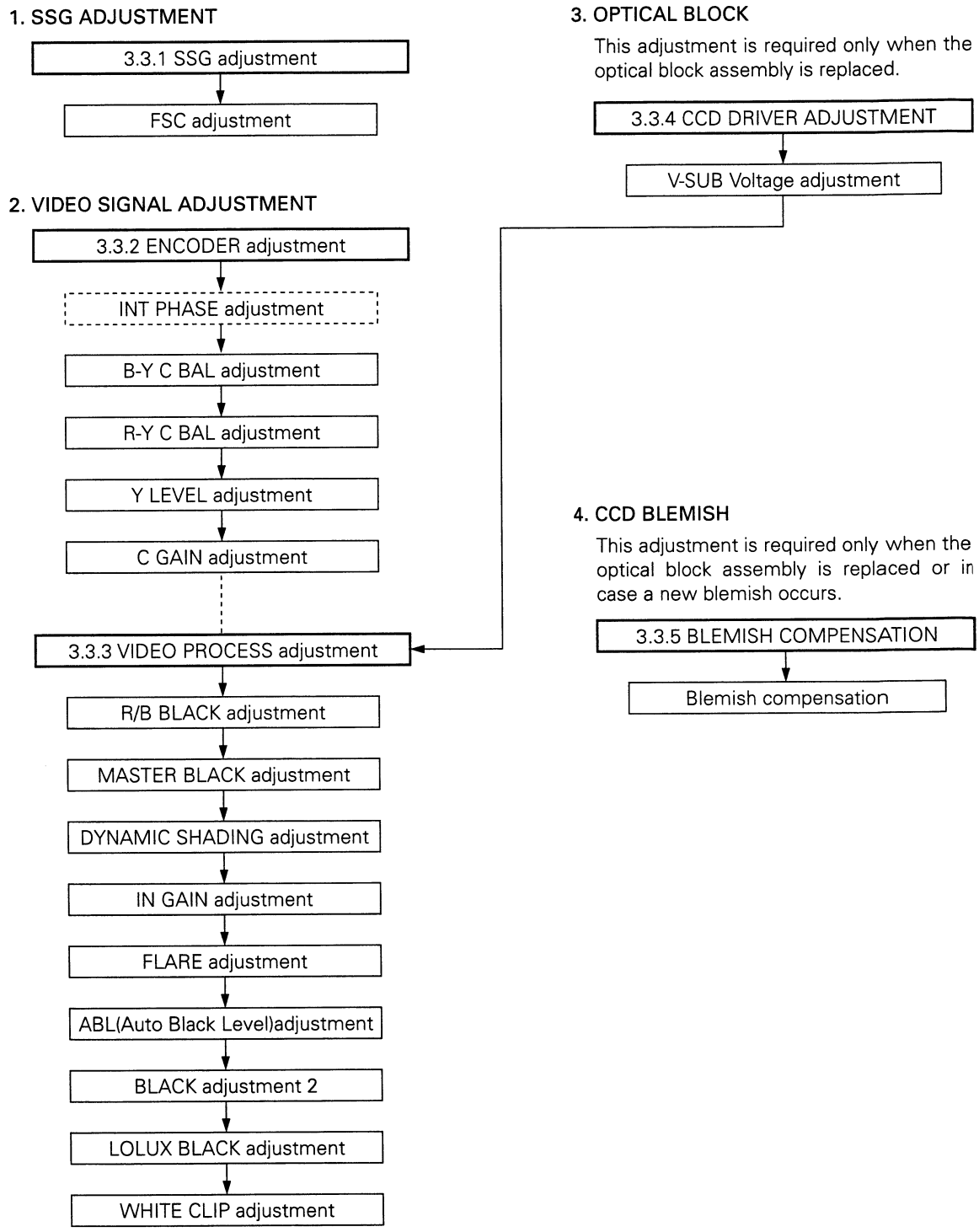

3.1.2 Electrical adjustment flowchart for video section

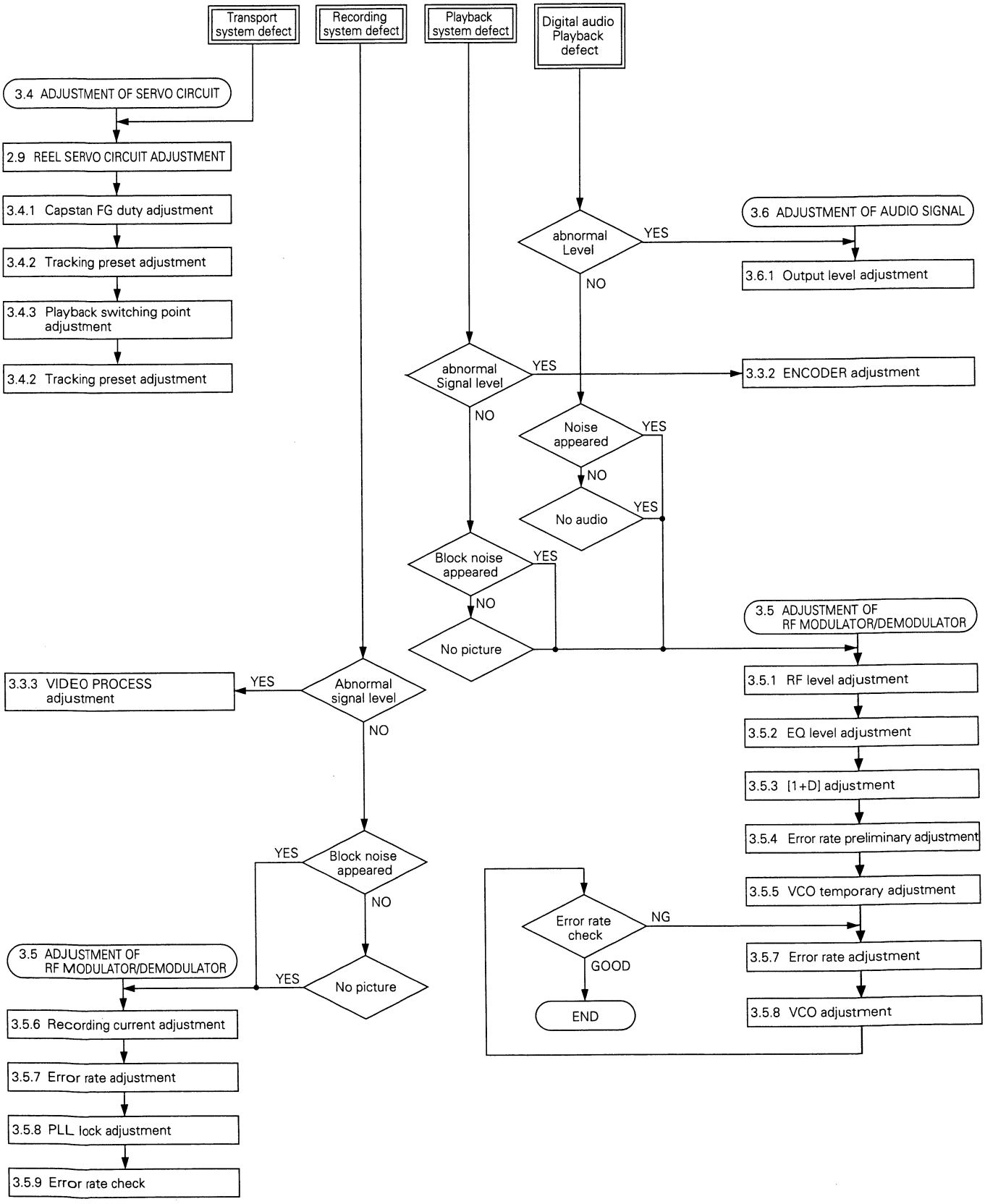

3.2 REQUIRED MEASURING INSTRUMENTS FOR ADJUSTMENT, STANDARD SETUP

3.2.1 Precautions on electrical adjustment

1. The electrical adjustment procedures described in this chapter apply to the cases that replacement of video heads or expendable parts of the mechanism needs electrical adjustment, there is something abnormal in output video signal, and there is a failure in the electrical circuit.
   Before proceeding to adjust an item appearing in this chapter, make sure to check that the objective item is out of the specifications.
2. For any item or part that needs mechanism adjustment before electrical adjustment, check to see whether it has undergone required mechanism adjustment or not before electrical adjustment.
3. Check and adjustment require this set to be equipped with all the boards.
4. Don't cut off the power supply to this set by turning off the power switch or other means whenever the tape is travelling, otherwise the tape may be damaged.
5. When a warning message appears, immediately turn off the power switch, and then investigate the cause and remove it. Before trying to turn on the set again, confirm that the cause of the warning message has completely been removed.
6. Start electrical adjustment at least 10 minutes after the VCR has been turned on.
   Regarding an oscilloscope to be used for measurement, use the 10:1 probe.

3.2.2 Test instruments required for adjustment

Instrument	Condition	Instrument	Condition
Oscilloscope	Capable of measuring 100MHz or higher bands and calibrated.	DC power supply	AA-P250 or equivalent
Oscilloscope *	Capable of measuring 300MHz or higher bands and calibrated. * (This oscilloscope is used in Section 3.5, "ADJUSTMENT OF RF MODULATOR/DEMODULATOR CIRCUIT").	Lighting apparatus	3,200K halogen lamp
		Color video monitor TV	
Frequency counter	Readable in 8 or more digits. Constancy of 0.1ppm/1× 10^{-7} or more at 0°C to 40°C.	Waveform monitor (WFM)	
Digital voltmeter	Input impedance of 10MΩ or more, and calibrated.	Digital S tape	For use in self-recording/playback.
Vectorscope	Must be calibrated, and capable of measuring 0-setup signals.	Lens	Fujinon A16 × 9B12U or equivalent
Audio tester	Must be calibrated.	Viewfinder	VF-P115 or equivalent
Spectrum analyzer	Must be calibrated. (This is not required when the BR-D92, BR-D80 or BR-D85 is available.)		

3.2.3 Special implements required for adjustment

1 Tripod base	2 Gray scale chart	3 Alignment tapes	4 Adjusting driver
<KA-510 or equivalent>	<Part No. GS2L>	(Refer to 3.2.4)	YTU93004-2
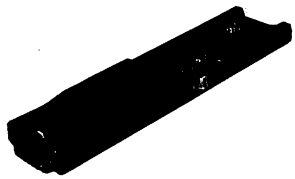	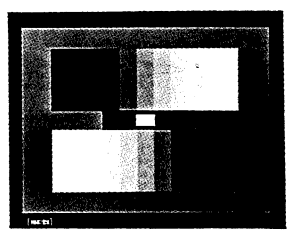	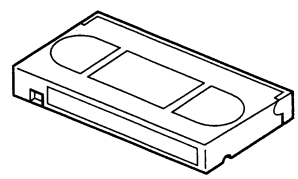	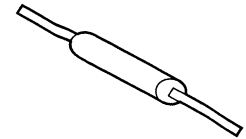

3.2.4 Alignment tape specifications

MSHP-X

Video Signal	Audio Signal	Recording Time (min.)	Applications
Color bar (1 track per frame does not contain video.)	–	50	X-value adjustment and tracking preset adjustment.

MSHV-1

Video Signal	Audio Signal	Time (min.)	Applications
Motion picture	Music sound	50	• Tracking preset adjustment • Playback switching point adjustment • RF modulator/demodulator system adjustments

MS-1 [NTSC]

No.	Video Signal	Audio Signal	Time (min.)	Applications
1	Color bar	1 kHz/–20dBFs	10	• Video system adjustments
2	Pulse & bar		5	
3	Multi-burst		5	• Audio system adjustments
4	Bow-tie		5	

MS-2 [PAL]

No.	Video Signal	Audio Signal	Time (min.)	Applications
1	Motion picture	Music sound	15	
2	Colour bar		10	• Video system adjustments
3	Pulse & bar	1 kHz/–20dBFs	5	
4	Multi-burst		5	• Audio system adjustments
5	Bow-tie		5	

3.2.5 Standard setup for adjustment (For Camera adjustment)

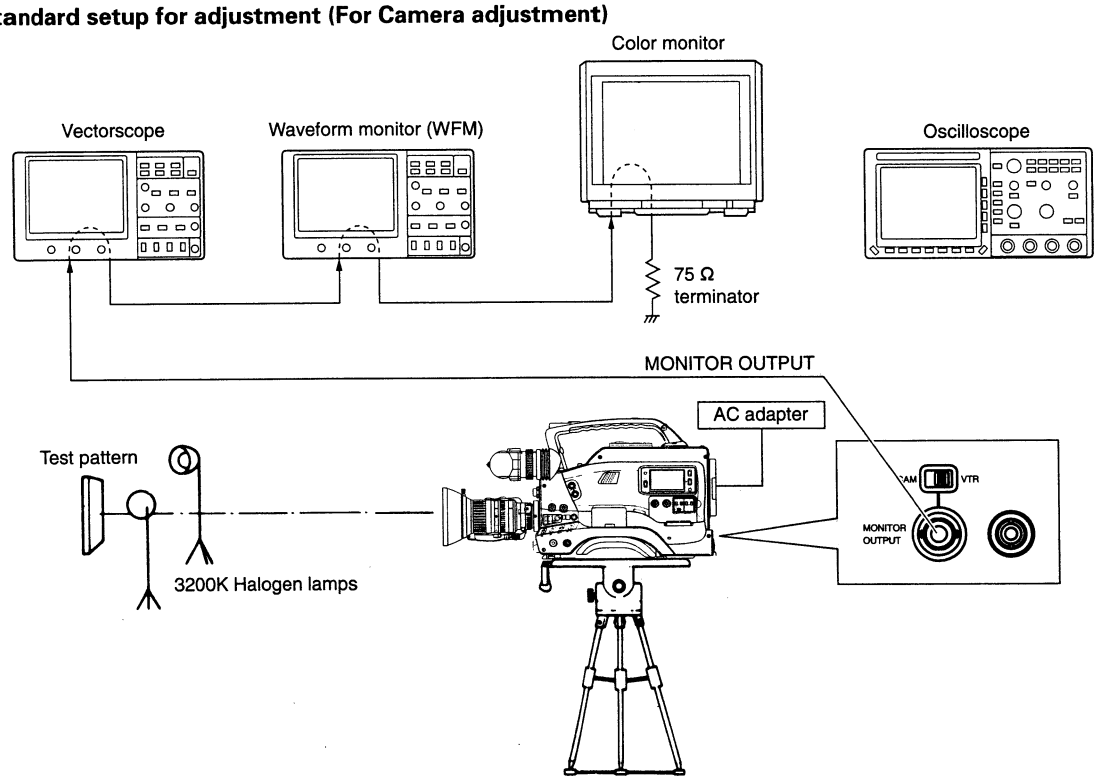

3.2.6 Simultaneous display in both viewfinder and monitor

If the POWER switch is turned on while the DOWN button on the right side panel is pressed together, the same display as shown in the viewfinder also appears on the monitor screen. For cancelling this condition of simultaneous display in both viewfinder and monitor, turn the POWER switch off once and again turn it on to restore the set to the normal display mode.

3.2.7 Adjustment procedure in the adjustment mode

Some of the adjustment items should be adjusted in the "adjustment mode".
The adjustment mode allows to select an item on the monitor screen and adjust all of the required adjustments by using one potentiometer. The functions affected by each adjustment item are set automatically and the mechanical switch settings may be ignored. The adjustment procedure in the adjustment mode is described below.

(1) Remove the right side cover. (See Section 1.3.1)
(2) Set S1-1 on the CP board to ON to activate overlay display.
(3) Select the adjustment item by pushing S9 and/or S10 on the CP board. (A blinking cursor is displayed on the left of selected item.)
(4) Adjust the selected item with VR6 (ALARM control potentiometer) on the CP board. The adjusted value is displayed in the range between -128 and 127 or between -25 and 25.
(5) Setting S1-1 to OFF terminates the adjustment mode and returns the monitor to the normal screen.

When the cursor is moved to another item or S1-1 is set to OFF, the adjusted data is stored in EEPROM (IC7 on the CP board). The data is then delivered to the camera when the power is turned on.

***NOTE**

In the adjustment mode, the reference values are automatically set to necessory parameters when adjusting. Adjust items sequentially from top to bottom of the menu display.

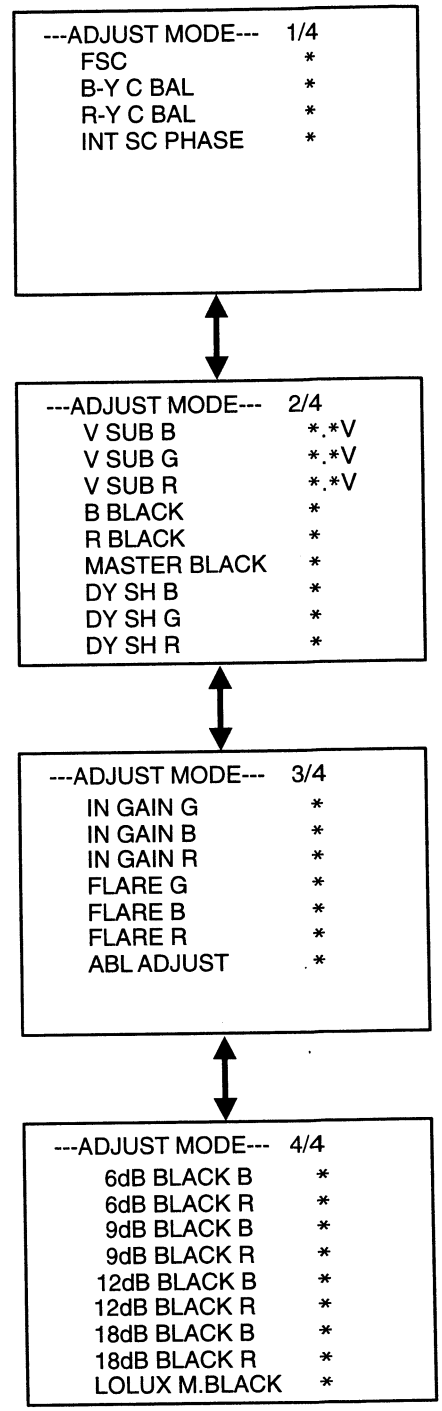

3.2.8 Service menu

Some of the adjustment items should be adjusted in the "SERVICE MENU".

(1) Set POWER switch to ON while pushing up the AUTOWHT. SW to initiate the SERVICE MENU.

(2) Select the SERVICE item with ITEM button on the CP board.

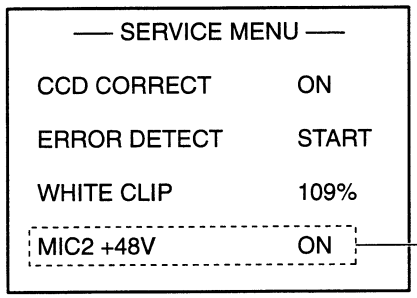

U version only

When using a microphone for MIC2 input connector other than a Phantom microphone, then please turn OFF the menu item "MIC2 +48V ON".

3.2.9 Potentiometers and test point layout

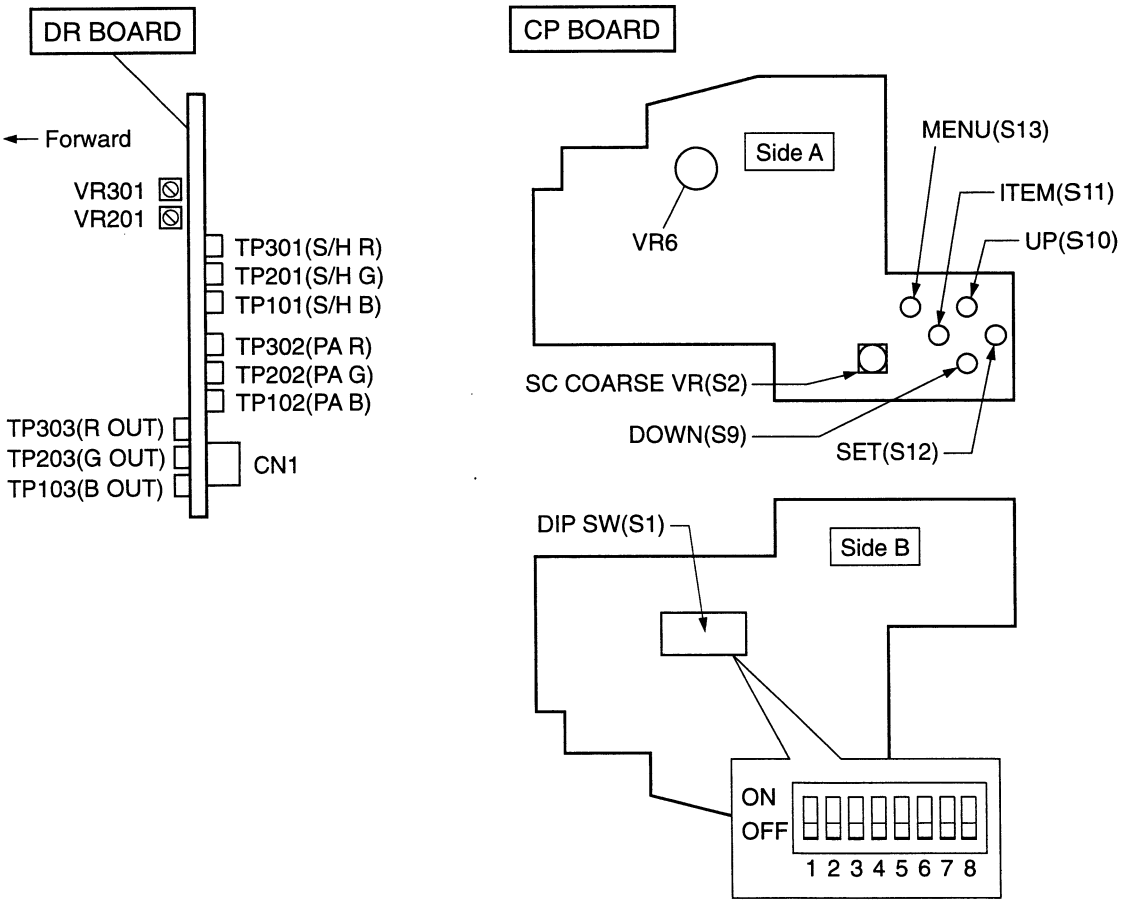

MAIN BOARD

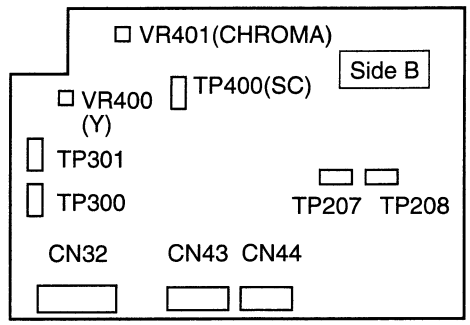

AUDIO/LCD BOARD

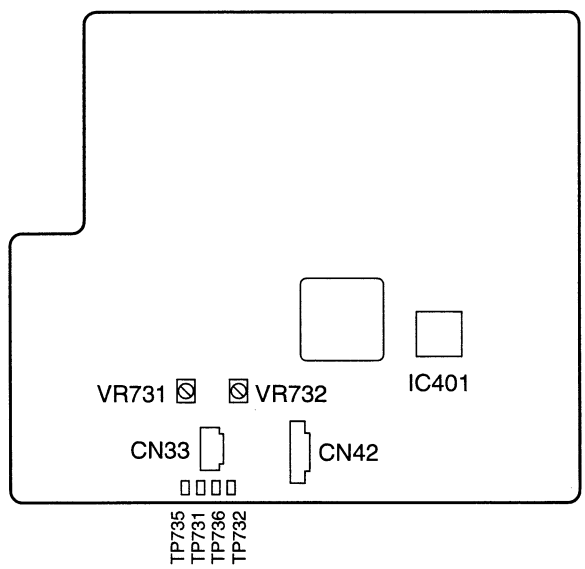

SS/RFP BOARD

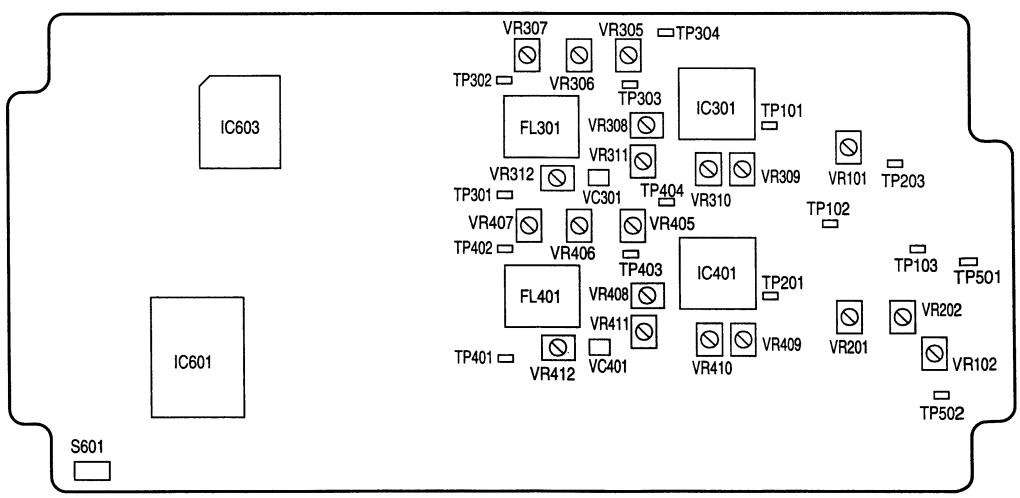

No.	Item	Measuring instruments & Input signals	Mode	Measuring point (◎) Adjustment parts (⇧) Adjustment level (☆)	Adjustment procedure

3.3 ADJUSTMENT OF CAMERA PART

3.3.1 SSG adjustment

• Confirm that no external sync is input to Genlock-in.					
1	Fsc adjustment	• Frequency counter	• ADJUST MODE ↓ "FSC" (Color bar output)	◎ TP400 [MAIN] ⇧ VR6 [CP] <NTSC> ☆ 3,579,545±10Hz <PAL> ☆ 4,433,618±10Hz	(1) Initiate the adjustment mode and select "FSC". (2) Adjust so that the SC frequency at the measurement point becomes equal to the specified level.

3.3.2 ENCODER adjustment

1	INT SC PHASE adjustment	• Vectorscope with SC-H measuring facility	• ADJUST MODE ↓ "INT SC PHASE" (Color bar output)	◎ MONITOR OUTPUT terminal (75 Ω terminated) ⇧ VR6 [CP] ☆ 0°	• This adjustment is usually not necessary to be done. Perform it only when it is required to do so, as after replacement of EEPROM. If the SC-H measuring instrument is not available, set the adjustment value to 0. • When perform the adjustment, confirm that no external sync is input to the camera. (1) Set to the adjustment mode and select "INT SC PHASE". (2) Set the vectorscope to SC-H mode. (3) Adjust the PHASE knob for the phase adjustment of the vectorscope and set the burst signal to the correct position. (4) Read the position of the sync dot on the outer dial scale and perform the coarse adjustment with the SC COARSE SW in the Function Box of the main unit. (In adjustment mode, the SC COARSE SW functions as an internal SC COARSE control.) (5) Adjust with VR6 so that the sync dot is positioned in the measured value.
2	B-Y C BAL adjustment	• Oscilloscope (H-rate)	• ADJUST MODE ↓ "B-Y C BAL" (Color bar output)	◎ MONITOR OUTPUT terminal (75Ω terminated) ⇧ VR6 [CP] ☆ Min. carrier leaks	(1) Initiate the adjustment mode and select "B-Y C BAL". (2) Adjust to minimize the carrier leaks in the white and black sect ions of the color bars.

Sync dot

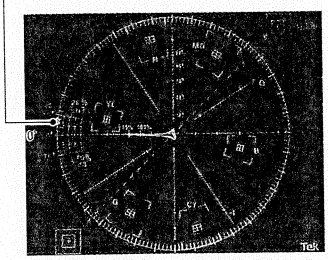

[NTSC]

Sync dot

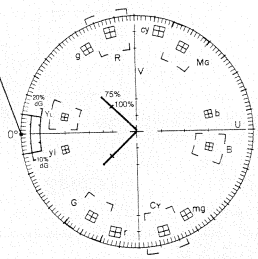

[PAL]

White level

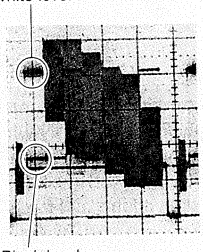

Black level

[NTSC]

White level

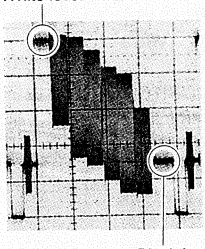

Black level

[PAL]

No.	Item	Measuring instruments & Input signals	Mode	Measuring point (◎) Adjustment parts (ⓣ) Adjustment level (☆)	Adjustment procedure
3	R-Y C BAL adjustment	• Oscilloscope (H-rate)	• ADJUST MODE ↓ "R-Y C BAL" (Color bar output)	◎ MONITOR OUTPUT terminal (75Ω terminated) ⓣ VR6 [CP] ☆ Min. carrier leaks	(1) Initiate the adjustment mode and select "R-Y C BAL". (2) Adjust to minimize the carrier leaks in the white and black sect ions of the color bars.
4	Y LEVEL adjustment	• Oscilloscope (H-rate)	• Color bar output	◎ MONITOR OUTPUT terminal (75Ω terminated) ⓣ VR400 [MAIN] <NTSC> ☆ 0.714 Vp-p <PAL> ☆ 0.7 Vp-p	(1) Adjust so that the Y level of compsite signal at the measurement point becomes equal to the specified level.
5	C GAIN adjustment	• Oscilloscope (H-rate)	• Color bar output	◎ MONITOR OUTPUT terminal (75Ω terminated) ⓣ VR401 [MAIN] <NTSC> ☆ 0.286 Vp-p <PAL> ☆ 0.3 Vp-p	(1) Output the color bar signal. (2) Adjust so that the output signal burst level at the measurement point becomes equal to the specified level.

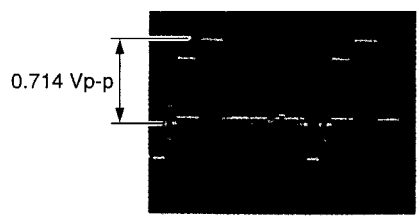

[NTSC]

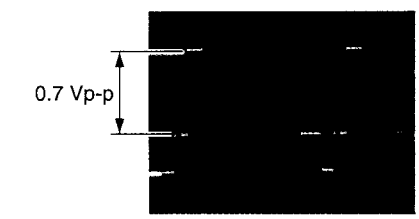

[PAL]

No.	Item	Measuring instruments & Input signals	Mode	Measuring point (◎) Adjustment parts (ⓣ) Adjustment level (☆)	Adjustment procedure

3.3.3 VIDEO PROCESS adjustment

1	B/R BLACK adjustments	• Oscilloscope (H-rate) or WFM • Lens cap	• ADJUST MODE ↓ "B BLACK" ↓ "R BLACK" (Iris closed)	◎ MONITOR OUTPUT terminal (75Ω terminated) ⓣ VR6 [CP] ☆ Min. carrier leaks (less than 15mVp-p)	(1) Initiate the adjustment mode and select "B BLACK". (2) Adjust to minimize the waveform carrier leak at the measurement point (less than 15 mVp-p). (3) Select "R BLACK". (4) Perform the same adjustment as step (2).
		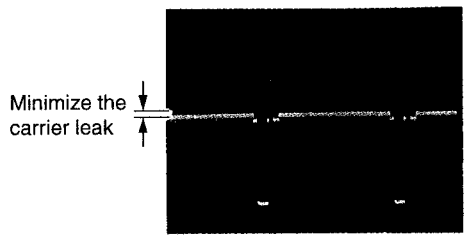			
2	MASTER BLACK adjustment	• Oscilloscope (H-rate) or WFM • Lens cap	• ADJUSTMENT MODE ↓ "MASTER BLACK" (Iris closed)	◎ MONITOR OUTPUT terminal (75Ω terminated) ⓣ VR6 [CP] <NTSC> ☆ 0.05 Vp-p (7.5 IRE) <PAL> ☆ 0 Vp-p	(1) Initiate the adjustment mode and select "MASTER BLACK". (2) Adjust so that the master black level at the measurement point is equal to the specified level.
		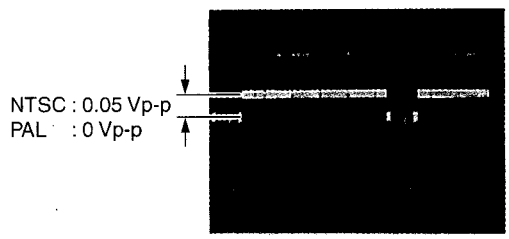			
3	DYNAMIC SHADING adjustment	• Oscilloscope (V-rate) or WFM • Gray scale chart (Just scan)	• ADJUST MODE ↓ "DY SH G" ↓ "DY SH R"	◎ MONITOR OUTPUT ⓣ VR6 [CP] ☆ 124 ◎ TP203 [DR] ◎ TP303 [DR] ⓣ VR201 [DR] ⓣ VR301 [DR] ☆ Flat	(1) Adjust the lens iris to close position. (2) Initiate the adjustment mode and select "DY SH G". Set the adjustment value to "124". (3) Select "DY SH R" and set the adjustment value to "124". (4) Adjust so that the black wave form at the measurement point is flat. (5) Shoot the gray scale chart and set the lens iris so that the white level becomes to 0.57 Vp-p (80 IRE).
		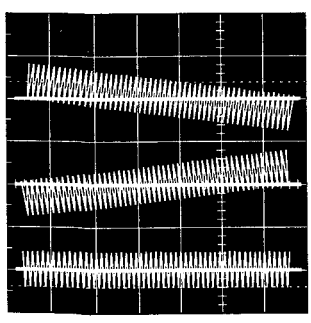	• "DY SH B" ↓ "DY SH G" "DY SH R"	ⓣ VR6 [CP] ☆ "0" ◎ MONITOR OUTPUT ⓣ VR6 [CP] ☆ Min. carrier leaks	(6) Select "DY SH B" and set the adjustment value to "0". (7) Select "DY SH G" and adjust to minimize the carrier leak at measurement point of the white section of gray scale chart. (8) Select "DY SH R" and perform the same operation as step (7).

No.	Item	Measuring instruments & Input signals	Mode	Measuring point (◎) Adjustment parts (ⓣ) Adjustment level (☆)	Adjustment procedure
4	IN GAIN adjustments	• Oscilloscope (H-rate, 10:1) • Gray scale chart (Just scan)	• ADJUST MODE ↓ "IN GAIN G"	◎ TP201 [DR] ⓣ Lens iris ☆ 520 mVp-p	(1) Initiate the adjustment mode and select "IN GAIN G". (2) Shoot the gray scale. (3) Adjust the lens iris so that the gray scale waveform level at the measurement point is equal to the specified level.
		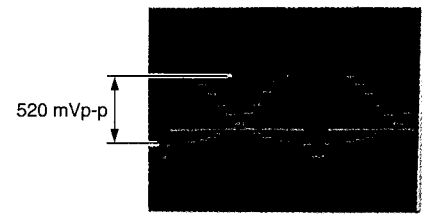			
		• Oscilloscope (H-rate) or WFM • Gray scale chart (Just scan)		◎ MONITOR OUTPUT terminal (75Ω terminated) ⓣ VR6 [CP] <NTSC> ☆ 0.714 Vp-p (100 IRE) <PAL> ☆ 0.7Vp-p	(4) Adjust so that the gray scale waveform level at the measurement point is equal to the specified level.
		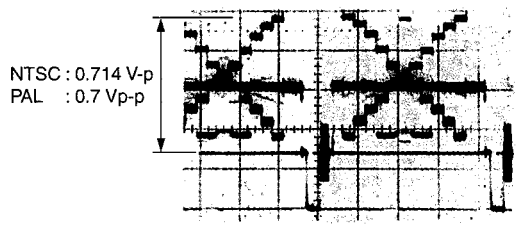			
		• Oscilloscope (H-rate) or WFM • Gray scale chart (Just scan)	• ADJUST MODE ↓ "IN GAIN B" ↓ "IN GAIN R"	◎ MONITOR OUTPUT terminal (75Ω terminated) ⓣ VR6 [CP] ☆ Min. carrier leaks (less than 15 mVp-p [2 IRE])	(5) Initiate the adjustment mode and select "IN GAIN B". (6) Adjust to minimize the carrier leak at the measurement point of the white section of the gray scale chart. (7) Select "IN GAIN R" and perform the same adjustment as step (6).
		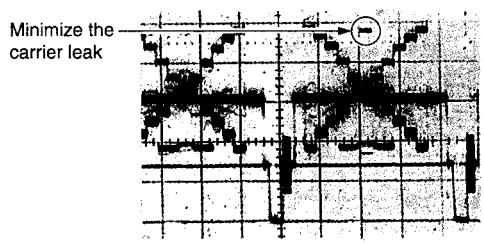			

No.	Item	Measuring instruments & Input signals	Mode	Measuring point (◎) Adjustment parts (Ⓣ) Adjustment level (☆)	Adjustment procedure
5	FLARE adjustment	• Oscilloscope (H-rate) or WFM • Gray scale chart (Just scan)	• ADJUST MODE ↓ "FLARE G"	◎ MONITOR OUTPUT terminal (75Ω terminated) Ⓣ VR6 [CP]	(1) Initiate the adjustment mode and select "FLARE G". (2) Shoot the gray scale chart and set the lens iris so that the cross point level is equal to 0.714 Vp-p [100 IRE](NTSC)/0.7Vp-p(PAL). (3) Check that the data value is "0".
		• Oscilloscope (H-rate) • Gray scale chart (Just scan)	• ADJUST MODE ↓ "FLARE B" ↓ "FLARE R"	◎ MONITOR OUTPUT terminal (75Ω terminated) Ⓣ VR6 [CP] ☆ Min.carrier leaks (less than 20mVp-p)	(4) Select "FLARE B" and adjust to minimize the carrier leak of the black section at the center of the gray scale chart. (5) Select "FLARE R" and perform the same adjustment as step (5).
6	ABL (Auto Black Level) adjustment	• Oscilloscope (H-rate) or WFM • Gray scale chart (Just scan)	• ADJUST MODE ↓ "ABL ADJUST"	◎ MONITOR OUTPUT terminal (75Ω terminated) Ⓣ VR6[CP] <NTSC> ☆ "0" <PAL> ☆ 50 mVp-p	<NTSC> (1) Initiate the adjustment mode and select "ABL ADJUST". (2) Set the adjustment value to "0". <PAL> (1) Initiate the adjustment mode and select "ABL ADJUST". (2) Shoot the gray scale chart and set the lens iris so that the white level is equal to 0.7 Vp-p(PAL). (3) Adjust so that the level, at the measurment point, of black section at the center of the gray scale chart becomes equal to the specified level.

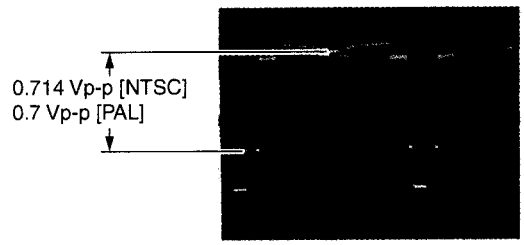

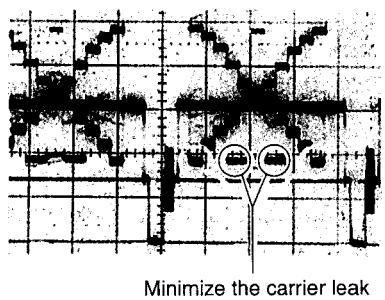

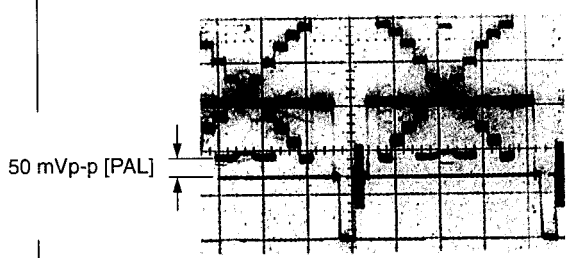

No.	Item	Measuring instruments & Input signals	Mode	Measuring point (◎) Adjustment parts (ⓣ) Adjustment level (☆)	Adjustment procedure
7	BLACK adjustment 2	• Vectorscope • LENS cap	• ADJUST MODE ↓ "6dB BLACK B" "6dB BLACK R" ↓ "9dB BLACK B" "9dB BLACK R" ↓ "12dB BLACK B" "12dB BLACK R" ↓ "18dB BLACK B" "18dB BLACK R"	◎ MONITOR OUTPUT terminal (75Ω termination) ⓣ VR6 [CP] ☆ Noise dot become center	(1) Put LENS cap or adjust the lens iris to close position. (2) Set the GAIN VR on vectorscope to maximam. (3) Initiate the adjustment mode. (4) Select "6dB BLACK B", "6dB BLACK R" and adjust so that the noise dot become center position of the vectorscope. (5) Select "9dB BLACK B", "9dB BLACK R" and perform the same operation as step (4). (6) Select "12dB BLACK B", "12dB BLACK R" and perform the same operation as step (4). (7) Select "18dB BLACK B", "18dB BLACK R" and perform the same operation as step (4).
		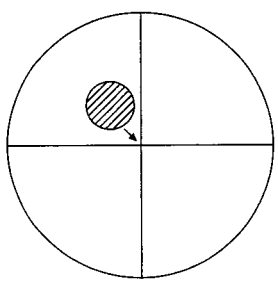 [NTSC]		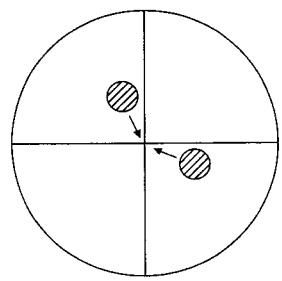 [PAL]	
8	LOLUX BLACK adjustment		• ADJUST MODE ↓ "LOLUX M. BLACK"	ⓣ VR6 [CP] ☆ –60	(1) Select "LOLUX M.BLACK". (2) Adjust so that the level at the adjustment level.
9	WHITE CLIP adjustment	• Viewfinder	• SERVICE MENU ↓ "W. CLIP"	◎ Viewfinder ☆ 109%	**Note:** **The white clip has been adjusted at 109% as initial setting. Re-adjust white clip level according to procedure, when required.** (1) Set POWER SW to ON while pushing up the AUTO WHT. SW to initiate the SERVICE MENU and select "W. CLIP". (2) Set the white clip LEVEL to "109%". (3) Set AUTO WHT. SW to ON to store the "W. CLIP" data value.

No.	Item	Measuring instruments & Input signals	Mode	Measuring point (◎) Adjustment parts (ⓣ) Adjustment level (☆)	Adjustment procedure

3.3.4 CCD driver adjustment

The following adjustments are required only when the optical block assembly is replaced.

No.	Item	Measuring instruments & Input signals	Mode	Measuring point (◎) Adjustment parts (ⓣ) Adjustment level (☆)	Adjustment procedure
1	V-SUB voltage adjustments	• Oscilloscope • Monitor TV • Gray scale • 85 W Halogen lamp	• ADJUST MODE ↓ "V SUB G" ↓ "V SUB B" "V SUB R"	◎ TP201 [DR] ⓣ Lens iris ☆ 3 Vp-p and higher ◎ TP201 [DR] ⓣ VR6 [CP] ☆ 3 Vp-p ◎ MONITOR OUTPUT terminal ⓣ VR6 [CP]	(1) Adjust the lens iris so that the gray scale waveform level at the measurement point is equal to the specified level. (2) Set the S1-1 on the CP board "ON" to set the ADJUST MODE. (3) Adjust the white peak of the gray scale is clipped to the specified level. (4) Shoot an incandescent lamp at the center of the monitor screen. (5) While opening the iris fully, confirm that there is smear in the picture. **Note** **When black paper or cloth is used as background, smear is easy to see.** (6) Swing the camera to the left and right (panning) and locate the position where the smear intensity maximizes. (7) Place the cursor to the "V SUB B". (8) While observing the monitor screen, adjust VR6 to minimize the smear intensity. (9) Place the cursor to the "V SUB R". (10) While observing the monitor screen, adjust VR6 to minimize the smear intensity. (11) Repeat the adjustments from step (7) to (10) two or three times. (12) Shoot an incandescent lamp at the center of the monitor screen. (13) Place the cursor to the "V SUB G". (14) While observing the monitor screen, adjust VR6 to minimize the smear intensity. (15) Set the S1-1 "OFF" and return to the normal screen.

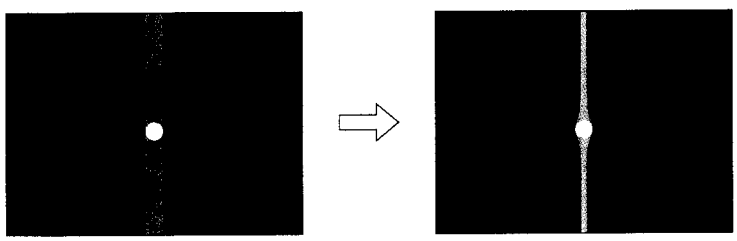

No.	Item	Measuring instruments & Input signals	Mode	Measuring point (◎) Adjustment parts (ⓣ) Adjustment level (☆)	Adjustment procedure

3.3.5 BLEMISH compensation

This camera incorporates a CCD blemish compensation function using an electronic memory. When the optical block assembly is replaced or in case a new blemish occurs, a renewed setting is required according to the following procedure. Note that the maximum number of compensated blemish is up to 13. (Compensated sequentially from the higher-level to the lower-lever blemishes).

1	Blemish compensation	• Video monitor 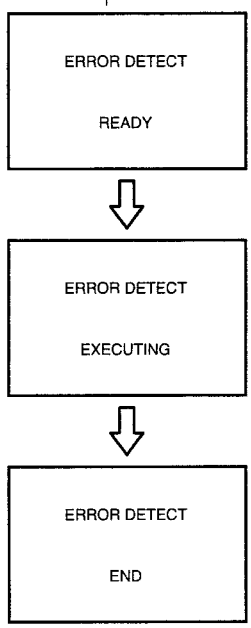	• SERVICE MENU ↓ "ERROR DETECT START"	◎ MONITOR OUTPUT connector (75Ω terminated)	Before adjust blemish compensation, run the camera for more than 2 hours under an ambient temperature between +25 and +30°C. (1) Set POWER SW to ON while pushing up the AUTO WHT. SW to imitiate the SERVICE MENU. (2) Place the cursor on "ERROR DETECT START" using the [ITEM] button. (3) Press the [SET] button. (4) The monitor screen shows "ERROR DETECT READY" then "ERROR DETECT EXECUTING" and the blemish compensation starts. (5) When blemishes have been detected, the monitor shows "ERROR DETECT END" and the detected blemish data is compensated. (6) After completion of the blemish compensation, the monitor screen returns to the normal screen.

3.4 ADJUSTMENT OF SERVO CIRCUIT

1	Capstan FG duty adjustment		No cassette DIAG mode (Sd: .- - -)	Automatic adjustment ☆ Adjust the capstan FG duty to the 50% in automaticaly. ☆ CPU measures FG level (Pin 74 of IC601 on the [SS/RFP]) just before the capstan motor is stopped.	1. Set the VCR to the non-cassette condition. 2. Set DIAG mode "Sd: .- - -" (see the section 1.9). 3. Press the ADVANCE button to start automatic adjustment. The counter displays "Sd:P .- - -" during the automatic adjustment. 4. Check that the counter displays Normal end: "Sd:Ed.00 00". Abnormal end: "Sd:Er.00 00".

No.	Item	Measuring instruments & Input signals	Mode	Measuring point (◎) Adjustment parts (①) Adjustment level (☆)	Adjustment procedure
2	Tracking preset adjustment	X value alignment tape "MSHP-X"	PLAY mode, DIAG mode (68: .-- --)	Automatic adjustment ☆RF ENV (IC601 80 pin [SS/RFP]) envelope should be maximized as a result of the automatic adjustment.	**[CAUTION]** **Proceed to the following adjustment after having completed the X-value adjustment.** 1. Set DIAG mode "68: .-- --" (see the subsection "1.9"). 2. Load and playback X value alignment tape "MSHP-X". 3. Press the SELECT button to start automatic adjustment. The counter displays "68:P .-- --" during the automatic adjustment. 4. Check that the counter displays "68:Ed·00 00". **[CAUTION]** **• If the automatic adjustment fails, data is not written and the counter display shows "68:Er·00 00". In this case, perform the adjustment again.** **• If the PRESET button is pressed or another mode than PLAY is entered during adjustment, the counter display shows "68:Ab·00 00".** 5. Eject the X value alignment tape. 6. Perform subsection "3.4.3 Playback switching point adjustment".
3	Playback switching point adjustment	Alignment tape "MSHV-1"	PLAY mode DIAG mode (64: .-- --)	Automatic adjustment ☆The leading edge of the HID signal should be as shown in the diagram below in automatically 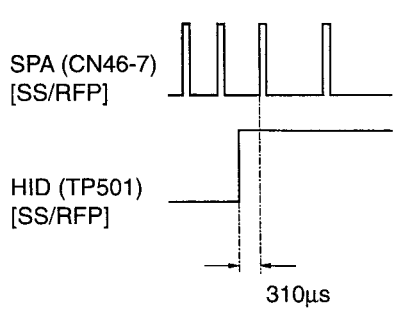 	**[CAUTION]** **Proceed to the following this adjustment after having completed the sub section "2.10.5 X-value adjustment".** 1. Set DIAG mode "64: .-- --" (see the subsection 1.9). 2. Load and playback alignment tape "MSHV-1". 3. Press the SELECT button to start automatic adjustment. The counter displays "64:P .-- --" during the automatic adjustment. 4. Check that the counter displays "64 Ed 00 00". **[CAUTION]** **• If the automatic adjustment fails, data is not written and the counter display shows "64:Er·00 00". In this case, perform the adjustment again.** **• If the PRESET button is pressed or another mode than PLAY is entered during adjustment, the counter display shows "64:Ab·00 00".** 5. Eject the alignment tape. 6. Press the MENU button to quit the DIAG mode.

No.	Item	Measuring instruments & Input signals	Mode	Measuring point (◎) Adjustment parts (ⓣ) Adjustment level (☆)	Adjustment procedure

3.5 ADJUSTMENT OF RF MODULATOR/DEMODULATOR CIRCUIT

[CAUTION]

- **Switch auto tracking OFF. (DIAG menu " 4:AT tr ")**
- **Before proceeding to the following adjustments, playback the alignment tape "MSHV-1" and adjust the TRACKING potentiometer (on the MT board) so that the amplitude of the RF waveform at TP203 on the SS/RFP board is maximized.**
- **The VR311 and the VR411 on the SS/RFP cannot be used for adjustments with the NTSC model. Make sure to turn it fully in a clockwise direction.**

1	RF level adjustment (Leading head)	Oscilloscope (V-rate, 10:1) EXT. TRIG TP501 [SS/RFP] Alignment tape "MSHV-1"	PLAY	◎ TP103 [SS/RFP] TP102 (GND) ⓣ VR102 [SS/RFP] ☆ 400 mVp-p	**[CAUTION]** • **Be sure to use an oscilloscope with a measuring band of 300 MHz or more. (The level would be lower if an oscilloscope with a measuring band below 300 MHz is used.)** 1. Playback the alignment tape "MSHV-1". 2. Adjust VR to obtain the signal level at the measuring point.
	(Lagging head)			◎ TP203 [SS/RFP] TP102 (GND) ⓣ VR202 [SS/RFP] ☆ 400 mVp-p	3. Adjust VR to obtain the signal level at the measuring point.

SS/RFP board

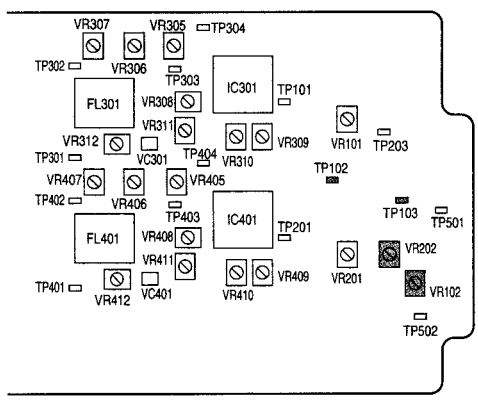

Set the larger level to 400 mVp-p.

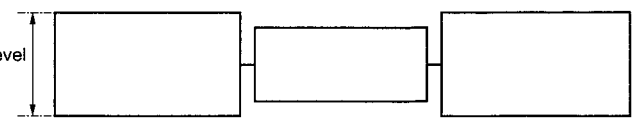

Set the larger level to 400 mVp-p.

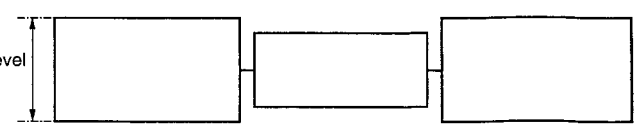

No.	Item	Measuring instruments & Input signals	Mode	Measuring point (◎) Adjustment parts (ⓣ) Adjustment level (☆)	Adjustment procedure
2	EQ level adjustment (Leading head) SS/RFP board 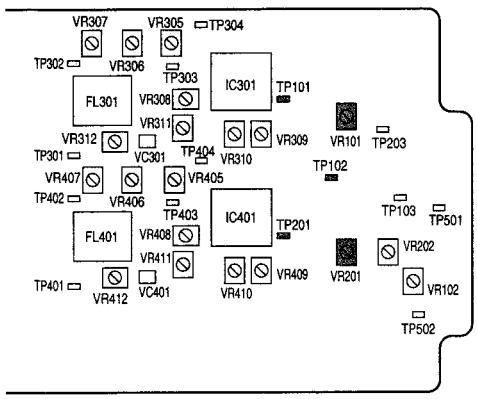 	Oscilloscope (V-rate, 10:1) EXT. TRIG TP501 Alignment tape "MSHV-1"	PLAY	◎ TP101 [SS/RFP] ◎ GND : TP102 ⓣ VR101 [SS/RFP] ☆ 150 mVp-p	**[CAUTION]** **• Be sure to use an oscilloscope with a measuring band of 300 MHz or more. (The level would be lower if an oscilloscope with a measuring band below 300 MHz is used.)** 1. Playback alignment tape "MSHV-1". 2. Adjust VR to obtain the signal level at the measuring point.
	(Lagging head)			◎ TP201 [SS/RFP] ◎ GND : TP102 ⓣ VR201 [SS/RFP] ☆ 150 mVp-p	3. Adjust VR to obtain the signal level at the measuring point.

No.	Item	Measuring instruments & Input signals	Mode	Measuring point (◎) Adjustment parts (⏍) Adjustment level (☆)	Adjustment procedure
3	[1+D] adjustment	**[CAUTION]** **• This adjustment requires the use of BR-D92, BR-D80 or BR-D85 (Digitals VCR) or a spectrum analyzer. Therefore, the adjustment procedure in the case of the BR-D92, BR-D80 or BR-D85 is as described in subsection 3A and in the case when a spectrum analyzer is used as described in subsection 3B. Select either subsection according to the available instruments.**			
3A	When the BR-D92/BR-D80/ BR-D85 is used (Preparation)		BR-D92/ BR-D80/ BR-D85 mode Menu switch "No. 111", internal color bar Test mode (6F 00 00) REC mode		**[PREPARATION]** **• Create a tape on which a 24.75 MHz pulse is recorded by using the following method.** 1. Press the MENU button of the BR-D80 or BR-D85 to select "No. 111", then select "INTERNAL COLOR BAR" and press the SET button. For BR-D92, select the internal signal generator by Input video signal button on the front panel. 2. Turn power OFF then turn power ON again in the test mode. **Note** **A) Turn the power switch to on.** **B) Press the "COUNTER RESET", "FF" and "REW" buttons at the same time within 2 second after counter display "00 00 00 00" is appeared.** 3. Press the MENU or SET button so that the counter displays "6F 00 00". 4. Press the COUNTER RESET button and check that the counter displays "6F P 00 00". 5. Load a digital S tape. 6. Press the REC and PLAY buttons to start recording. 7. After recording for a few minutes, press the STOP button. 8. Press the COUNTER RESET button and check that the counter displays "6F End". 9. Eject the digital S tape. This tape contains the recording of the 24.75 MHz pulse.

No.	Item	Measuring instruments & Input signals	Mode	Measuring point (◎) Adjustment parts (ⓣ) Adjustment level (☆)	Adjustment procedure
	(Leading head)	Oscilloscope (H-rate, 10:1) Tape containing the recording of 24.75 MHz pulse	PLAY	◎ TP301 [SS/RFP] ◎ TP302 (GND) [SS/RFP] ⓣ VR312 [SS/RFP] ⓣ VC301 [SS/RFP] ☆ Minimum level	**[CAUTION]** **• Be sure to use an oscilloscope with a measuring band of 300 MHz or more. (The level would be lower if an oscilloscope with a measuring band below 300 MHz is used.)** 10. Load the digital S tape containing the recording of 24.75 MHz pulse and playback the pulse recording section. 11. The 24.75 MHz (about 40 ns) signal is observed together with noise. Adjust VRs to obtain the minimum level at the measuring point.
		SS/RFP board 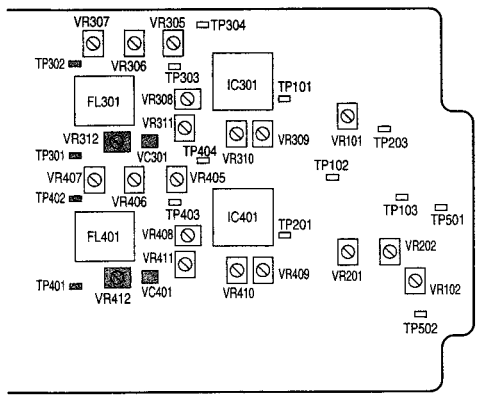 			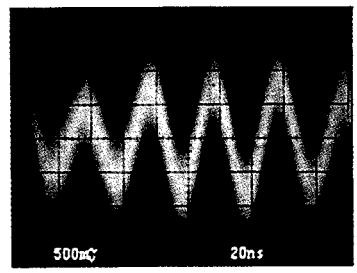 NG 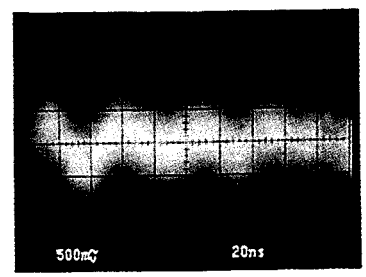 OK	12. Proceed to the adjustment of the trailing head.
	(Lagging head)			◎ TP401 [SS/RFP] ◎ TP402 (GND) [SS/RFP] ⓣ VR412 [SS/RFP] ⓣ VC401 [SS/RFP] ☆ Minimum level	**[CAUTION]** **• Be sure to use an oscilloscope with a measuring band of 300 MHz or more. (The level would be lower if an oscilloscope with a measuring band below 300 MHz is used.)** 13. The 24.75 MHz (about 40 ns) signal is observed together with noise. Adjust VRs to obtain the minimum level at the measuring point.
				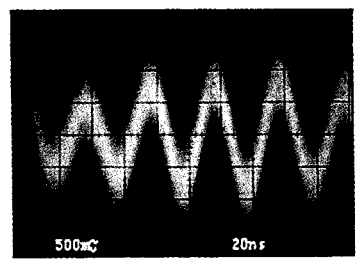 NG 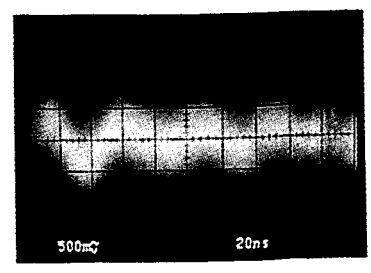 OK	

No.	Item	Measuring instruments & Input signals	Mode	Measuring point (◎) Adjustment parts (ⓣ) Adjustment level (☆)	Adjustment procedure
3B	When the spectrum analyzer is used (Leading head) SS/RFP board 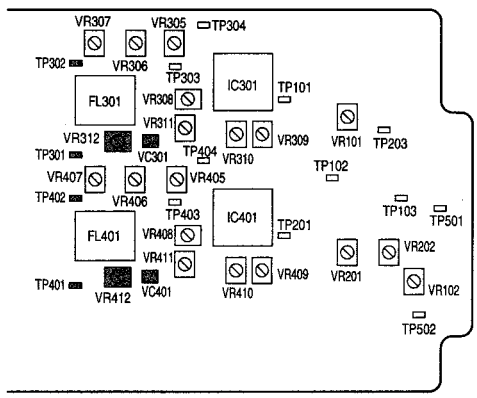 	Spectrum analyzer Alignment tape "MSHV-1"	PLAY	◎ TP301 [SS/RFP] ◎ TP302 (GND) [SS/RFP] ⓣ VC301 [SS/RFP] Minimum level is 24.75 MHz. ◎ TP301 [SS/RFP] ◎ TP302 (GND) [SS/RFP] ⓣ VR312 [SS/RFP] ☆ Adjust so that the 24.75 MHz level is –30 dB or lower compared to the 15 MHz level.	1. Load and playback alignment tape "MSHV-1". 2. Adjust VR to obtain the signal level at the measuring point. 3. Adjust VRs to obtain the signal level at the measuring point. 4. Repeat steps 2 and 3 above for a few times. 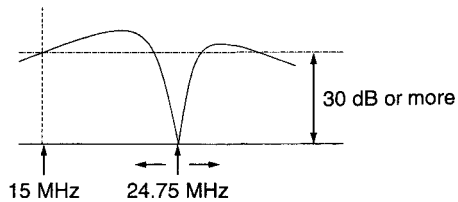 5. Proceed to the adjustment of lagging head.
	(Lagging head)			◎ TP401 [SS/RFP] ◎ TP402 (GND) [SS/RFP] ⓣ VC401 [SS/RFP] ☆ Minimum level is 24.75 MHz. ◎ TP401 [SS/RFP] ◎ TP402 (GND) [SS/RFP] ⓣ VR412 [SS/RFP] ☆ Adjust so that the 24.75 MHz level is –30 dB or lower compared to the 15 MHz level.	6. Adjust VR to obtain the signal level at the measuring point. 7. Adjust VRs to obtain the signal level at the measuring point. 8. Repeat steps 2 and 3 above for a few times. 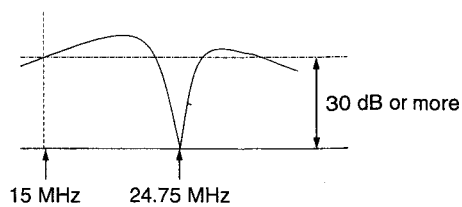

No.	Item	Measuring instruments & Input signals	Mode	Measuring point (◎) Adjustment parts (ⓣ) Adjustment level (☆)	Adjustment procedure

[CAUTION] The VR311 and the VR411 on the SS/RFP board cannot be used for adjustments with the NTSC model. Make sure to turn it fully in a clockwise direction.

4	Error rate preliminary adjustment (Leading head) SS/RFP board 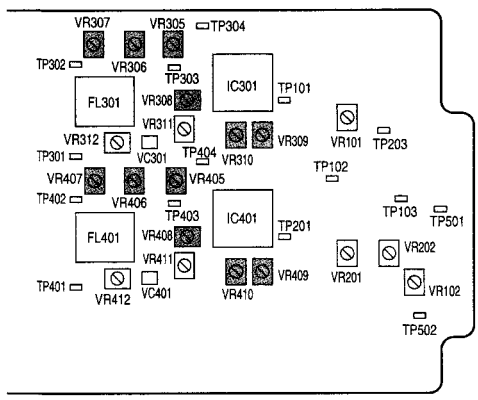 	Oscilloscope (V-rate, 10:1) EXT. TRIG TP501 [SS/RFP] Alignment tape "MSHV-1"	PLAY	◎ TP207 [MAIN] ⓣ VR305 [SS/RFP] ⓣ VR306 [SS/RFP] ⓣ VR307 [SS/RFP] ⓣ VR310 [SS/RFP] ☆ Adjust to stabilize the extremely bright line as it occurs. ⓣ VR308 [SS/RFP] ⓣ VR307 [SS/RFP] ⓣ VR306 [SS/RFP] ⓣ VR309 [SS/RFP] ⓣ VR310 [SS/RFP] ☆ Adjust to minimize the bright line.	1. Playback alignment tape "MSHV-1". 2. For PAL : Set VR411 to the fully counterclockwice position. 3. Adjust VR305, VR306, VR307 and VR310 alternately to stabilize the pulse output as shown on the diagram below. 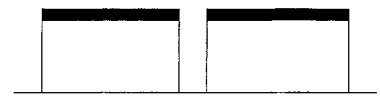 Adjust to stabilize the extremely bright line as it occurs. 4. Adjust VR308, VR307, VR306,VR309 and VR310 in order, so that the error component bright line is minimized. 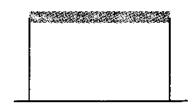 Adjust to minimize the bright line. 5. For PAL : Set VR411 to the fully clockwise position.
	(Lagging head)	Oscilloscope (V-rate, 10:1) EXT. TRIG TP501 [SS/RFP] Alignment tape "MSHV-1"	PLAY	◎ TP208 [MAIN] ⓣ VR405 [SS/RFP] ⓣ VR406 [SS/RFP] ⓣ VR407 [SS/RFP] ⓣ VR410 [SS/RFP] ☆ Adjust to stabilize the extremely bright line as it occurs. ⓣ VR408 [SS/RFP] ⓣ VR407 [SS/RFP] ⓣ VR406 [SS/RFP] ⓣ VR409 [SS/RFP] ⓣ VR410 [SS/RFP] ☆ Adjust to minimize the bright line.	6. Playback alignment tape "MSHV-1". 7. For PAL : Set VR311 to the fully counterclockwise position. 8. Adjust VR407, VR406, VR405 and VR410 alternately to stabilize the pulse output as shown on the diagram below. 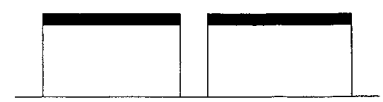 Adjust to stabilize the extremely bright line as it occurs. 9. Adjust VR408, VR407, VR406, VR409 and VR410 in order, so that the error component bright line is minimized. 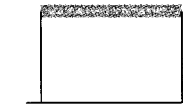 Adjust to minimize the bright line. 10. For PAL : Set VR311 to the fully clockwise position.

No.	Item	Measuring instruments & Input signals	Mode	Measuring point (◎) Adjustment parts (ⓣ) Adjustment level (☆)	Adjustment procedure
5	VCO preliminary adjustment (Leading head)	Digital voltmeter Oscilloscope (V-rate, 10:1) EXT TRIG TP501 Alignment tape "MSHV-1"	PLAY	◎ TP303 [SS/RFP] TP304 (GND) ⓣ VR305 [SS/RFP] ☆ ((a+b)/2 – 0.05) V ± 0.01 V	1. Playback alignment tape "MSHV-1". 2. Connect the digital voltmeter to TP303 and the oscilloscope to TP300 [MAIN]. 3. Set VR305 to the fully counterclockwise position, then rotate it slowly clockwise while observing the picture on the monitor. When the observed signal is locked as shown in the diagram, measure the voltage at TP303 using the digital voltmeter. Assume that this voltage is "a". 4. Set VR305 to the fully clockwise position.
					TP300 (Leading head) TP301 (Lagging head) Freeze → Immediately before locking → Locked
					SS/RFP board 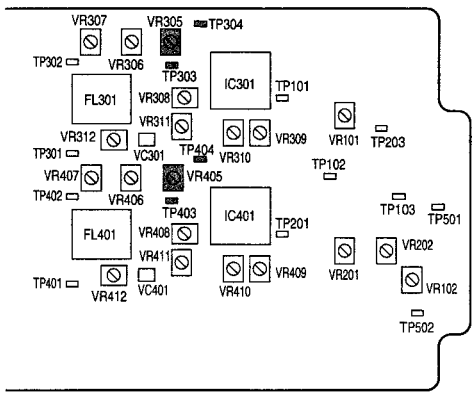 5. Press the "STOP" button, and then playback the alignment tape. 6. Rotate VR305 slowly counterclockwise from the fully clockwise position while observing the oscilloscope waveform. When the observed signal is locked as shown in the diagram, measure the voltage at TP303 using the digital voltmeter. Assume that this voltage is "b". 7. Substitute measured voltages "a" and "b" in the following equation. $X = \left(\frac{a+b}{2} - 0.05\right)$ 8. Adjust VR305 so that the voltage at TP331 is equal to the value of "x" in the above equation.
	(Lagging head)			◎ TP403 [SS/RFP] TP404 (GND) ⓣ VR405 [SS/RFP] ☆ ((a+b)/2 – 0.05) V ± 0.01 V	9. Connect the digital voltmeter to TP403 and the oscilloscope to TP301 [MAIN]. 10. Adjust VR so that the same adjustment of leading head.

No.	Item	Measuring instruments & Input signals	Mode	Measuring point (◎) Adjustment parts (ⓣ) Adjustment level (☆)	Adjustment procedure

[CAUTION] Before proceeding to Section 3.5.6, "Recording current adjustment" and Section 3.5.7, "Error rate adjustment", complete 2.4.3, "Switching point adjustment" and switch auto tracking ON.

6	Recording current adjustment	Digital S tape	STOP mode DIAG mode (12: .-- --)	Automatic adjustment	1. Set DIAG mode " 12: .-- -- " (see the subsection 1.9). 2. Load a digital S tape and put the VCR in stop mode. 3. Press the SELECT button to start automatic adjustment. 4. Automatic adjustment starts when "P ** **" is displayed. Normal end : " Ed " is displayed on the LCD. Abnormal end: " Er ** " is displayed. In this case a re-adjustment is automatically executed. 5. Quit the DIAG mode. 6. Proceed to sub section "3.5.7 Error rate adjustment".

- The automatic adjustment is executed in the following sequence.

A) It so recorded the signal 4 times that recording current shifted 8 steps (the total required time is about 2 minutes). During this the display shows

"12:P .10 88"

0AH step from 50 to 96

B) Tape is rewound to the recording start point in REV search mode. The display shows " 12:P .20 00" during this.

C) The VCR enters PLAY mode and detects the playback level of the recorded section. Then the optimum playback level of each head (CH1 leading, CH2 trailing) is identified and the recording currents are determined based on this analysis (the required time is about 2 minutes). During this operation, the display shows

"12:P .38 88"

data 1 data 2

data 1: The head being detected (1 to 4).
data 2: Hex data between 00H and FFH.
When the playback levels of all the steps have been detected and the optimum values are identified, the displayed data changes.

D) When the optimum values of all the heads have been identified, the VCR enters STOP mode and automatic adjustment is completed.

[CAUTION]

Counter display " 12:Er.00 00 " appears for one of the following reasons;
a) the PRESET button is pressed during operation; or
b) the VCR mode is changed; or
c) the tape end is detected; or
d) the adjustment is defective.
If the reason is a) or b), restart adjustment from the beginning. If the reason is c), rewind tape and restart adjustment. If the reason is d), perform the adjustments in subsection "3.5.1" to "3.5.5" again.

No.	Item	Measuring instruments & Input signals	Mode	Measuring point (◎) Adjustment parts (ⓣ) Adjustment level (☆)	Adjustment procedure

[CAUTION] Before proceeding to subsection "3.5.7 Error rate adjustment", complete "3.4.3 Playback switching point adjustment" and switch auto tracking ON.

7	Error rate adjustment (Preparation)	Moving image	REC		1. Load a digital S tape. 2. A self-recording tape is made by shooting moving images for a few minutes.
	(Leading head)	Oscilloscope (V-rate, 10:1) EXT. TRIG. TP501 Frequency counter	PLAY	◎ TP300 [MAIN] ⓣ VR308 [SS/RFP] ⓣ VR307 [SS/RFP] ⓣ VR306 [SS/RFP] ⓣ VR309 [SS/RFP] ☆ Minimized pulse count in osciloscope display Minimize the frequency counter	1. PAL set VR411 to the fully counterclockwise position (for E-Ver.). 2. Playback the digital S tape which was recorded in the preparation stage. 3. Connect the oscilloscope and frequency counter to TP300. 4. While observing the oscilloscope and frequency counter, adjust VR308 to minimize the frequency. (Adjust VR to obtain the specified minimum count of pulse and smallest frequency count.) 5. While observing the oscilloscope and frequency counter, adjust VR307 to minimize the frequency. (Adjust VR to obtain the specified minimum count of pulse and smallest frequency count.) 6. While observing the oscilloscope and frequency counter, adjust VR306 to minimize the frequency. (Adjust VR to obtain the specified minimum count of pulse and smallest frequency count.) 7. While observing the oscilloscope and frequency counter, adjust VR309 to minimize the frequency. (Adjust VR to obtain the specified minimum count of pulse and smallest frequency count.)
			REV. SEARCH	ⓣ VR310 [SS/RFP] ☆ Minimize the frequency counter display	8. Initiate REV search mode. 9. While observing the frequency counter, adjust VR310 to minimize the frequency.
				ⓣ VR307 [SS/RFP] ⓣ VR306 [SS/RFP]	10. Initiate play mode. 11. While observing the oscilloscope and frequency counter, adjust VR307 and VR306 alternately to minimize the frequency count. (Adjust VR to obtain the specified minimum count of pulse and smallest frequency count.)
			PLAY	☆ Minimize the frequency counter display (no more than 3 kHz for U-ver.). (No more than 1.5 kHz for E-ver.)	12. Proceed to the adjustment of the lagging head. 13. PAL set VR411 to the fully clockwise position.

SS/RFP board

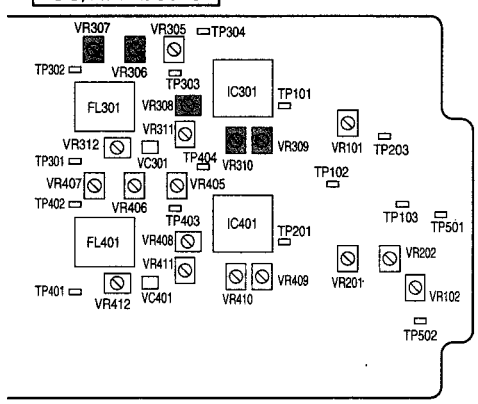

No.	Item	Measuring instruments & Input signals	Mode	Measuring point (◎) Adjustment parts (ⓣ) Adjustment level (☆)	Adjustment procedure
	(Lagging head)	Oscilloscope (V-rate, 10:1) EXT. TRIG. TP501 [RFP] Frequency counter	PLAY	◎ TP301 [MAIN] ⓣ VR408 [SS/RFP] ⓣ VR407 [SS/RFP] ⓣ VR406 [SS/RFP] ⓣ VR409 [SS/RFP] ☆ Minimum pulse count in osciloscope Minimize the frequency counter	1. For PAL : Set VR311 to the fully counterclockwise position (for E-Ver.). 2. Playback the digital S tape which was recorded in the preparation stage. 3. Connect the oscilloscope and frequency counter to TP301. 4. While observing the oscilloscope and frequency counter, adjust VR408 to minimize the frequency. (Adjust VR to obtain the specified minimum count of pulse and smallest frequency count.) 5. While observing the oscilloscope and frequency counter, adjust VR407 to minimize the frequency. (Adjust VR to obtain the specified minimum count of pulse and smallest frequency count.) 6. While observing the oscilloscope and frequency counter, adjust VR406 to minimize the frequency. (Adjust VR to obtain the specified minimum count of pulse and smallest frequency count.) 7. While observing the oscilloscope and frequency counter, adjust VR409 to minimize the frequency. (Adjust VR to obtain the specified minimum count of pulse and smallest frequency count.)
			REV. SEARCH	ⓣ VR410 [SS/RFP] ☆ Minimize the frequency counter display	8. Initiate REV search mode. 9. While observing the frequency counter, adjust VR410 to minimize the frequency.
			PLAY	ⓣ VR407 [SS/RFP] ⓣ VR406 [SS/RFP] ☆ Minimize the frequency counter display (no more than 3 kHz for U-ver.). (No more than 1.5 kHz for E-ver.)	10. Initiate play mode. 11. While observing the oscilloscope and frequency counter, adjust VR407 and VR406 alternately to minimize the frequency. (Adjust VR to obtain the specified minimum count of pulse and smallest frequency count.) 12. For PAL : Set VR311 to fully clockwise position.
8	VCO adjustment				Adjust the same adjustment "3.5.5 VCO preliminary adjustment (Leading head/Lagging head)". • For the adjustment, make sure to playback the digital S tape which was recorded during the preparation stage.

SS/RFP board

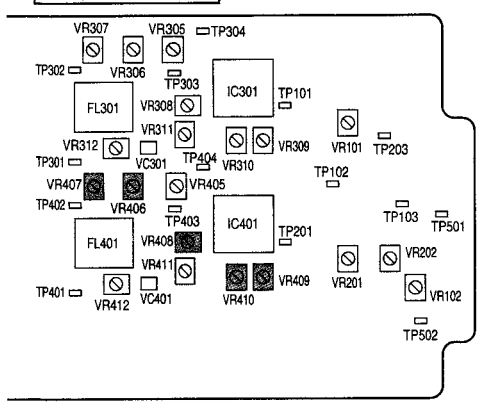

No.	Item	Measuring instruments & Input signals	Mode	Measuring point (◎) Adjustment parts (ⓣ) Adjustment level (☆)	Adjustment procedure
9	Error rate check (Leading head) SS/RFP board 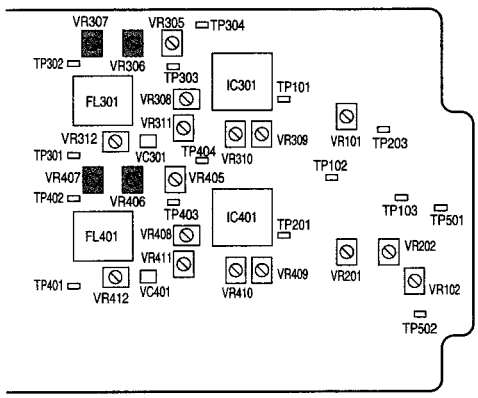 	Digital S tape (DS104) Frequency counter	PLAY	◎ TP300 [MAIN] ☆ No more than 3 kHz for U-ver. No more than 1.5 kHz for E-ver. ⓣ VR306 [SS/RFP] ⓣ VR307 [SS/RFP]	1. Playback the digital S tape which was recorded in the preparation stage. 2. Connect the frequency counter to the adjustment point and check the error rate. 3. For PAL : Set VR411 to the fully counterclockwise position (for E-Ver.). 4. The error rate check result is OK if the frequency counter reading is no more than 3 kHz (for U-Ver.) 1.5 kHz (for E-Ver.) and almost equal to the value set by the prevously-made error rate adjustment. (See subsection 3.6.7) After PLL lock adjustment, if the error rate has increased (i.e. the reading is larger by 10% or more than the frequency value set by the error rate adjustment), adjust VR306, VR307 again and proceed to subsection "3.5.5 VCO adjustment".
	(Lagging head)	Digital S tape (DS104) Frequency counter		◎ TP301 [MAIN] ☆ No more than 3 kHz for U-ver. No more than 1.5 kHz for E-ver. ⓣ VR406 [SS/RFP] ⓣ VR407 [SS/RFP]	1. Playback the digital S tape which was recorded in the preparation stage. 2. Connect the frequency counter to the adjustment point and check the error rate. 3. For PAL : Set VR311 to the fully counterclockwise position (for E-Ver.) 4. The error rate check result is OK if the frequency counter reading is no more than 3 kHz (for U-Ver) 1.5 kHz (for E-Ver.) and almost equal to the value set by the prevously-made error rate adjustment. If the error rate has increased (i.e. the reading is larger by 10% or more than the frequency value set by the error rate adjustment), adjust VR406, VR407 again and proceed to subsection "3.5.5 VCO adjustment". 5. For E-ver.: set VR411 to the fully clockwise position.

No.	Item	Measuring instruments & Input signals	Mode	Measuring point (◎) Adjustment parts (Ⓣ) Adjustment level (☆)	Adjustment procedure

3.6 ADJUSTMENT OF AUDIO CIRCUIT

1	Output level adjustment (Channel 1)	Audio tester Alignment tape "MS-1" (NTSC) or "MS-2" (PAL)	PLAY	◎ LINE OUT (DA1/DA3) (Rear panel XLR5pin) Ⓣ VR731 (CH1) [AUDIO & LCD] ☆ –6 dBs	1. Load and playback the alignment tape. 2. Adjust VR to obtain the specified level at the measuring point.
	(Channel 2)	Audio tester Alignment tape "MS-1" (NTSC) or "MS-2" (PAL)	PLAY	◎ LINE OUT (DA2/DA4) (Rear panel XLR5pin) Ⓣ VR732 (CH2) [AUDIO & LCD] ☆ –6 dBs	1. Load and playback the alignment tape. 2. Adjust VR to obtain the specified level at the measuring point.

AUDIO/LCD BOARD

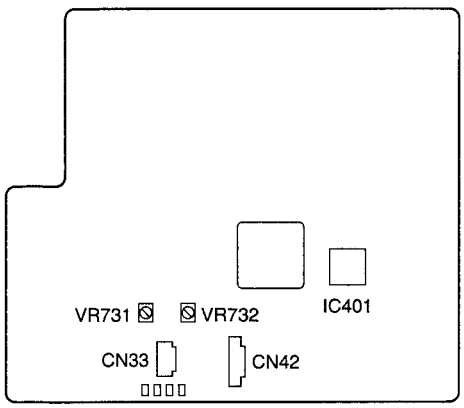

AUDIO LINE OUT connector

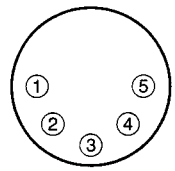

No.	Signal
①	GND
②	DA1/3(H)
③	DA1/3(C)
④	DA2/4(H)
⑤	DA2/4(C)

3.7 ADJUSTMENT OF S/S CIRCUIT

1	Remaining battery detection circuit adjustment (automatic adjustment)	+12 V ± 0.05 V ↓ DC INPUT	REC, DIAG mode (86: .- - -)	Automatic adjustment	1. Input +12 V +/–0.05 V (4 A or more) to the DC INPUT connector. 2. Set the VCR to the REC mode. 3. Set DIAG mode "86: .- - - -" (see the subsection "1.9"). 4. Press the select button to start automatic adjustment. 5. "86 Ed 00 xx" is displayed on the LCD counter display when the automatic adjustment ends normally. 6. Turn power OFF to quit the DIAG mode.

SECTION 4
CHARTS AND DIAGRAMS

■ SCHEMATIC DIAGRAM NOTES

- **Schematic safety precaution**
  ⚠ Parts are safety related parts.
  When replacing them, be sure to use the specified parts.
- **Voltage and waveform measurements**
  Voltage: Measured with digital voltmeter in DC range; iris closed in REC mode.
  Value in ( ) is indicated only in the case PB voltage is different from that in REC mode.
  Waveform: Gray scale illuminated at more than 4000 lux at 3200K lighting.
- **Unit of value**
  Unless otherwise specified
  1) Resistance is in Ω (1/6 W)
  2) Capacitance is in μF
  3) Inductance is in μH

- **Expression of wiring**

As the following circuit diagram is divided to print on some sheets, such an indication as the following is found in the case the wiring extends over two or more divided sections.

1) Circuit diagram divided into two or more sections:

Board	Board Name	Number of divided sections
0 6	MAIN	1/10 – 10/10
0 7	SS/RFP	1/6 – 6/6
0 8	AUDIO & LCD	1/5 – 5/5
0 9	PR	1/4 – 4/4
—	OVERALL	1/6 – 6/6

2) Indication of wiring which extends to another section:
(Example)

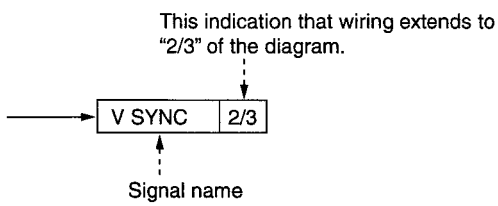

In the above case, the end of the wiring is connected to the "V SYNC" on the 2nd section of the diagram.

- **Wiring of connector**
(Example)

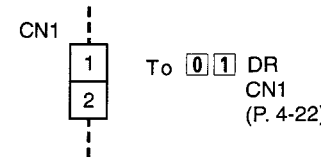

In the above example, CN1 is connected with CN1 on 0 1 DR board.

- **Signal flow on the diagram**
The following allow marks indicate the specified signal paths respectively.

➡ : Recording or EE signal path
⇨ : Playback signal ptah
➡ : Recording and Playback signal path

- **Others**

In regard of a board assembly whose circuit is composed of multilayered board patterns such 4- or 6-layered patterns, board patterns of the power supply lines and grounding lines are omitted in this section.

Note: For detail of each electrical part, refer to Section 6 "ELECTRICAL PARTS LIST" by it symbol number.

■ REPLACING SURFACE MOUNT "CHIP" COMPONENTS

- Some resistors, shorting jumpers (0 Ω resistance), ceramic capacitors, transistors, and diodes are chip parts. These chip parts cannot be reused after they are once removed.
- Chip resistors used in some circuits are of high precision type having little error in resistance.
  To demonstrate the full capacity of this set, place an order for proper parts referring to the diagrams and parts lists in the section 5.
- Soldering cautions:
  1) Do not apply heat for more than 3 seconds.
  2) Avoid using a rubbing stroke when soldering.
  3) Discard removed chips; do not reuse them.
  4) Supplementary cementing is not required.
  5) Use care not to scratch or otherwise damage the chips.

■ CHIP PARTS PIN ARRANGEMENT

[1] Digital transistors

DTC 1 □□□□
① ②③

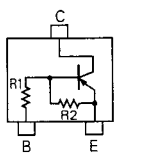

(Top view)

DTA 1 □□□□
DTB 1 □□□□
① ②③

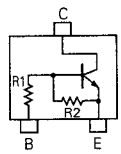

(Top view)

① Two digits show resistance of R1 in abbreviation.
- 43 : 4.7 kΩ
- 14 : 10 kΩ
- 24 : 22 kΩ
- 44 : 47 kΩ

② Roman letter show the resistive ratio between R1 and R2 in abbreviation.
- E : R2/R1 = 1/1
- Y : R2/R1 = 5/1
- W : R2/R1 = 2/1
- X : R2/R1 = 1/2
- T : R2 is opened.

③ Symbol the shape of resistor in abbreviation.

[2] Chip transistors and chip F.E.T.s

2SA □□□□
2SB □□□□

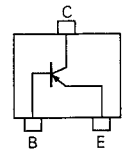

(Top view)

2SC □□□□
2SD □□□□

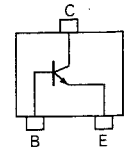

(Top view)

2SK □□□□

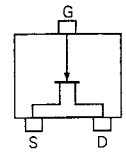

(Top view)

2SJ □□□□

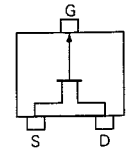

(Top view)

[3] Chip diodes

MA143A/MA742

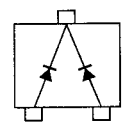

(Top view)

MA142WA

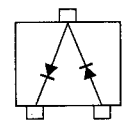

(Top view)

MA142A

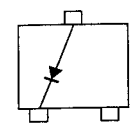

(Top view)

4.1 INDEX TO PAGES OF MAIN BOARDS AND CIRCUIT BOARD LOCATION

4.1.1 Circuit board location

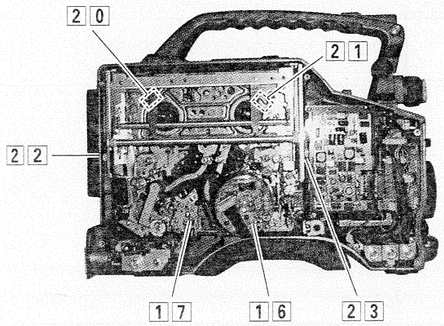

Left side

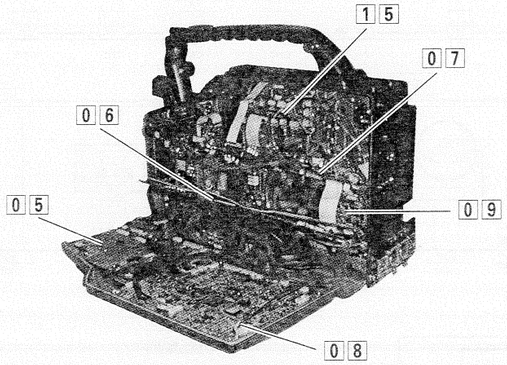

Right side

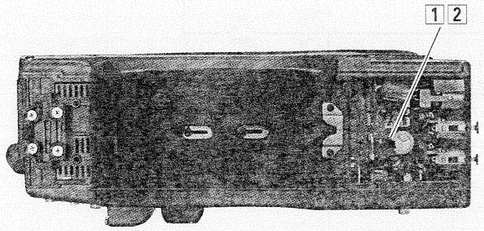

Bottom side (connector box)

Board No.	Board Name	Page of diagram		
		Block diagram	Schematic diagram	Circuit board
01	DR	4-11	4-22	4-23
02, 03, 04	ISB, ISG, ISR	4-11	4-24	4-25
05	CP	4-12	4-26, 4-28	4-27, 4-29
06	MAIN	4-13 to 4-15	4-30 to 4-39	4-30 to 4-43
07	SS/RFP	4-16, 4-17	4-44 to 4-49	4-50 to 4-53
08	AUDIO & LCD	4-18, 4-19	4-54 to 4-60	4-61, 4-62
09	PR	4-20	4-63 to 4-66	4-67
10	MT		4-68	4-69
11	LCD SUB	4-19	4-68	4-69
12	I/O JUNC		4-72	4-72
13	MIC 1		4-70	4-71
14	OPERATION		4-70	4-71
15	MEC I/F		4-6	4-71
16	MDA		4-73	4-73
17	A/C HEAD	4-18	4-9	4-73
18	MODE SENSE		4-6	4-73
19	AL SENSE		4-6	4-73
20	TU SENSE		4-6	4-73
21	SP SENSE		4-6	4-73
22	BEGIN SENSE		4-6	4-73
23	END SENSE		4-6	4-73
24	SW 1		4-70	4-71
25	SW 2		4-5	4-72
26	SW 3		4-5	4-72
27	SW 4		4-70	4-71
28	SW 5		4-5	4-72
29	SW 6		4-5	4-72
30	TC. IN		4-5	4-72

Board No.	Board Name	Page of diagram		
		Block diagram	Schematic diagram	Circuit board
31	TC. OUT		4-5	4-72
32	EAR		4-5	4-72
33	LI. BATT	4-19	4-5	4-71
35	GEN. IN		4-5	4-72
36	MON. OUT		4-5	4-72
37	RM		4-5	4-72
38	CN		4-70	4-71
41	MIC 2		4-70	4-71
39	PS		4-74	—
40	MEMORY		4-70	4-71
—	OVERALL		4-4 to 4-9	—

4-3

4.2 OVERALL WIRING DIAGRAM

– DIAGRAM 1/6 –

SYMBOL	PARTS NAME	PARTS NUMBER
A	FERRITE CORE	SSV2252
B	FERRITE CORE	SCV2728-001
C	FERRITE CORE	QQR0895-008
D	FERRITE CORE	QQR0895-011
E	FERRITE CORE	QQR0717-032
F	FERRITE CORE	QQR0947-001
G	FERRITE CORE	PGZ02359
H	FERRITE CORE	SCV2631-001

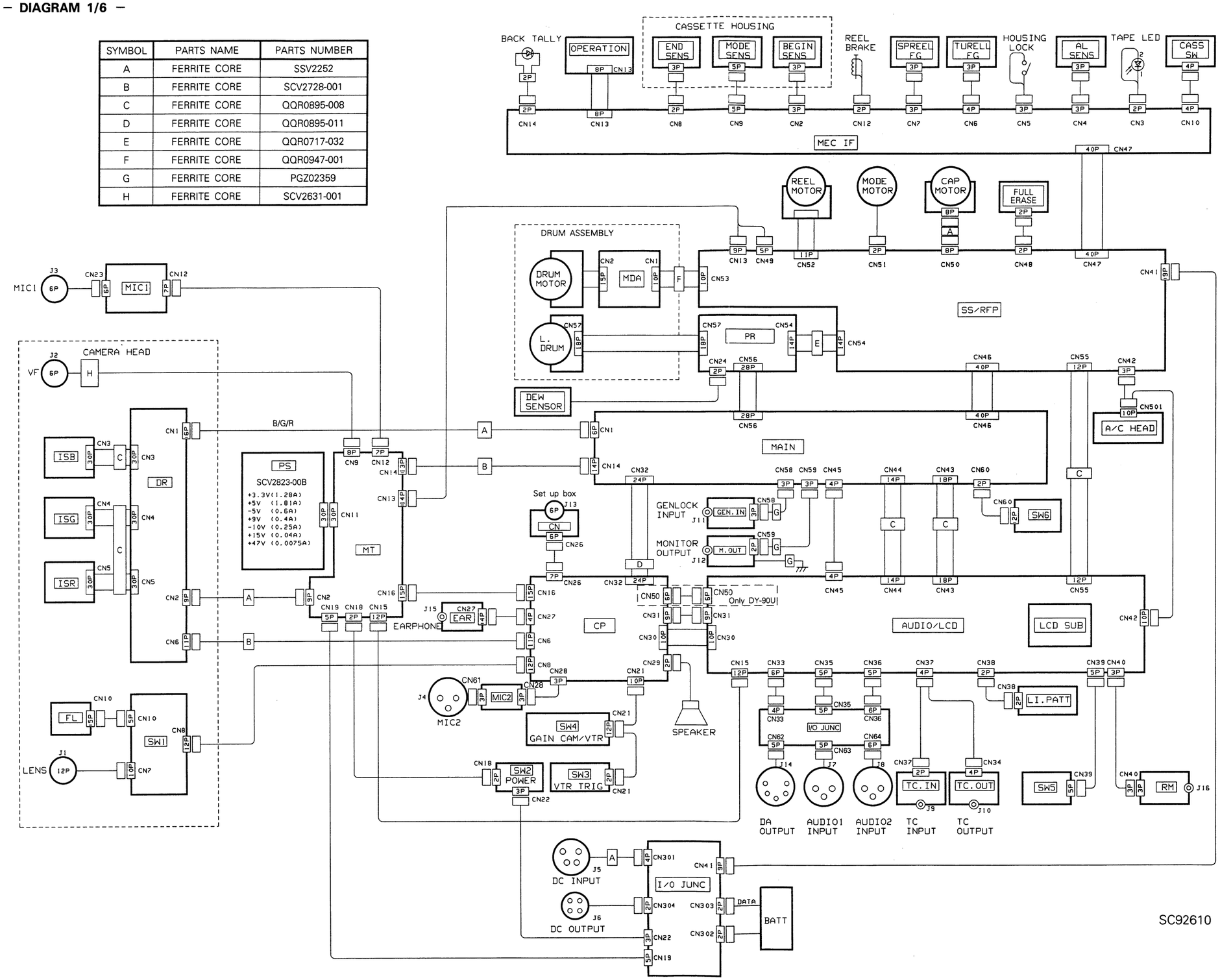

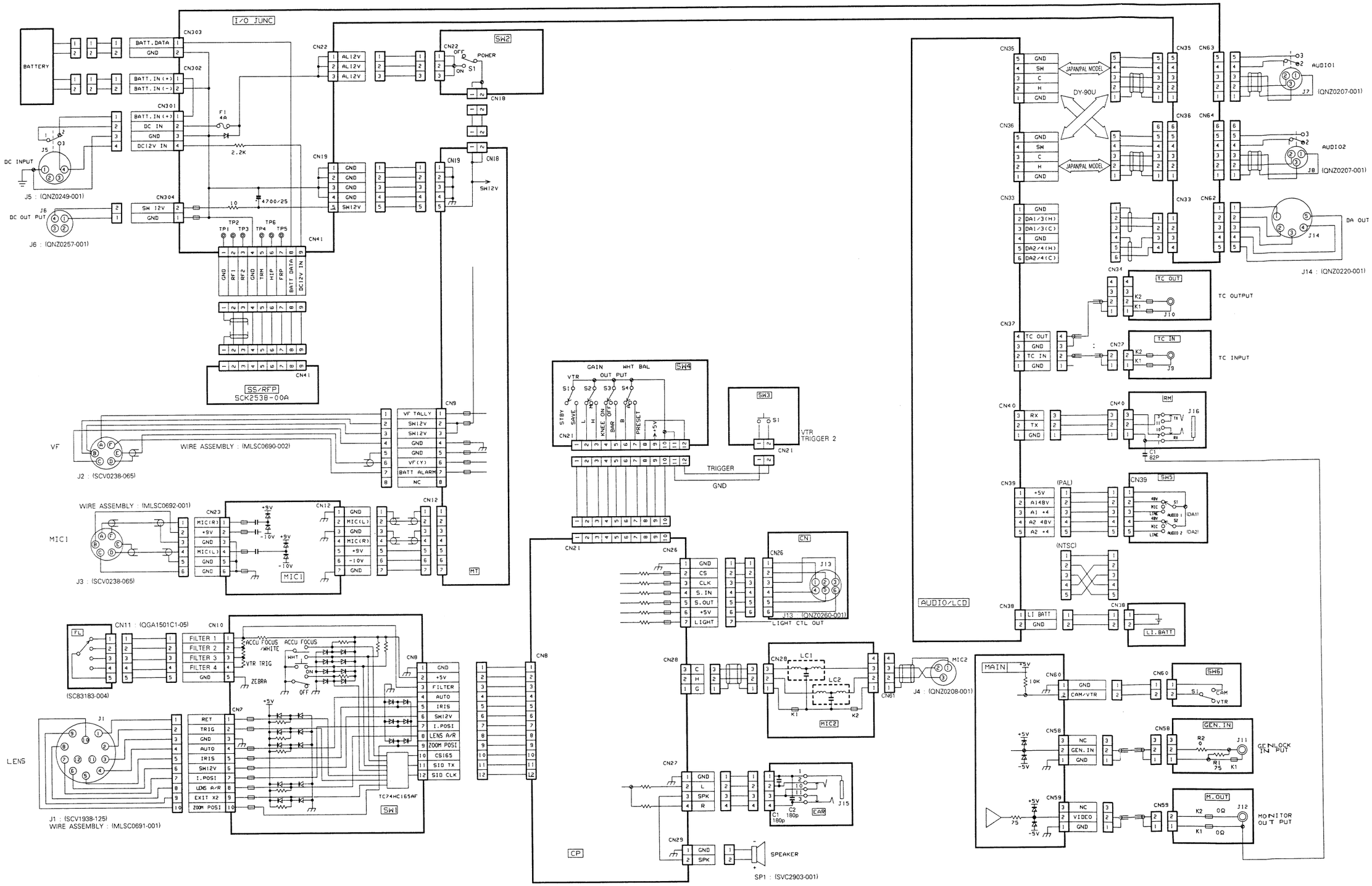
I/O JUNC
BATTERY
CN303
BATT.DATA
GND
CN302
BATT.IN(+)
BATT.IN(-)
CN301
BATT.IN(+)
DC IN
GND
DC12V IN
F1 4A
2.2K
DC INPUT
J5
J5 : (QNZ0249-001)
CN304
SW 12V
GND
J6
DC OUT PUT
J6 : (QNZ0257-001)
CN22
AL12V
AL12V
AL12V
SW2
OFF
POWER
ON
S1
CN18
CN19
GND
GND
GND
GND
SW12V
4700/25
TP1 TP2 TP3 TP4 TP5 TP6
CN41
GND RF1 RF2 GND TRM HIP FRP BATT DATA DC12V IN
SS/RFP
SCK2538-00A
VF
WIRE ASSEMBLY : (MLSC0690-002)
J2 : (SCV0238-065)
CN9
VF TALLY
SW12V
SW12V
GND
GND
VF(Y)
BATT ALARM
NC
WIRE ASSEMBLY : (MLSC0692-001)
MIC1
J3 : (SCV0238-065)
CN23
MIC(R)
+9V
GND
MIC(L)
GND
GND
+9V
-10V
+9V
-10V
MIC1
CN12
GND
MIC(L)
GND
MIC(R)
+9V
-10V
GND
CN12
MT
GAIN
WHT BAL
OUT PUT
SW4
VTR
S1
S2
S3
S4
STBY SAVE
L
H
KNEE ON
OFF
BAR
B
PRESET
+5V
CN21
SW3
S1
VTR TRIGGER 2
CN21
TRIGGER
GND
CN21
CN8
CN26
GND
CS
CLK
S.IN
S.OUT
+5V
LIGHT
CN
CN26
J13
J13 (QNZ0260-001)
LIGHT CTL OUT
CN28
C
H
G
CN28
LC1
LC2
K1
K2
MIC2
CN61
MIC2
J4 : (QNZ0208-001)
CN27
GND
L
SPK
R
J15
C1 180p
C2 180p
EAR
CN29
GND
SPK
SPEAKER
SP1 : (SVC2903-001)
CP
FL
CN11 : (QGA1501C1-05)
CN10
FILTER 1
FILTER 2
FILTER 3
FILTER 4
GND
ACCU FOCUS /WHITE
ACCU FOCUS
WHT
VTR TRIG
ZEBRA
ON
OFF
(SC83183-004)
CN8
GND
+5V
FILTER
AUTO
IRIS
SW12V
I.POSI
LENS A/R
ZOOM POSI
CS165
SID TX
SID CLK
+5V
CN7
RET
TRIG
GND
AUTO
IRIS
SW12V
I.POSI
LENS A/R
EXIT X2
ZOOM POSI
J1
LENS
TC74HC165AF
SW1
J1 : (SCV1938-125)
WIRE ASSEMBLY : (MLSC0691-001)
CN35
GND
SW
C
H
GND
JAPAN/PAL MODEL
DY-90U
JAPAN/PAL MODEL
CN36
GND
SW
C
H
GND
CN33
GND
DA1/3(H)
DA1/3(C)
GND
DA2/4(H)
DA2/4(C)
CN35
CN36
CN33
CN63
CN64
CN62
AUDIO1
J7
(QNZ0207-001)
AUDIO2
J8
(QNZ0207-001)
DA OUT
J14
J14 : (QNZ0220-001)
CN34
TC OUT
K2
K1
J10
TC OUTPUT
CN37
TC OUT
GND
TC IN
GND
CN34
CN37
TC IN
K2
K1
J9
TC INPUT
CN40
RX
TX
GND
CN40
RM
J16
14 V
11
10
9
RX
C1 82P
CN39
+5V
A1 48V
A1 +4
A2 48V
A2 +4
(PAL)
CN39
SW5
48V MIC LINE
S1
AUDIO 1
S2
48V MIC LINE
AUDIO 2
(DA1)
(DA2)
(NTSC)
AUDIO/LCD
CN38
LI BATT
GND
CN38
LI.BATT
MAIN
+5V
10K
CN60
GND
CAM/VTR
CN60
SW6
S1
CAM
VTR
CN58
NC
GEN.IN
GND
+5V
-5V
CN58
GEN.IN
R2 0
J11
R1 75
K1
GENLOCK IN PUT
CN59
NC
VIDEO
GND
+5V
-5V
75
CN59
M.OUT
K2 0Ω
J12
K1 0Ω
MONITOR OUT PUT

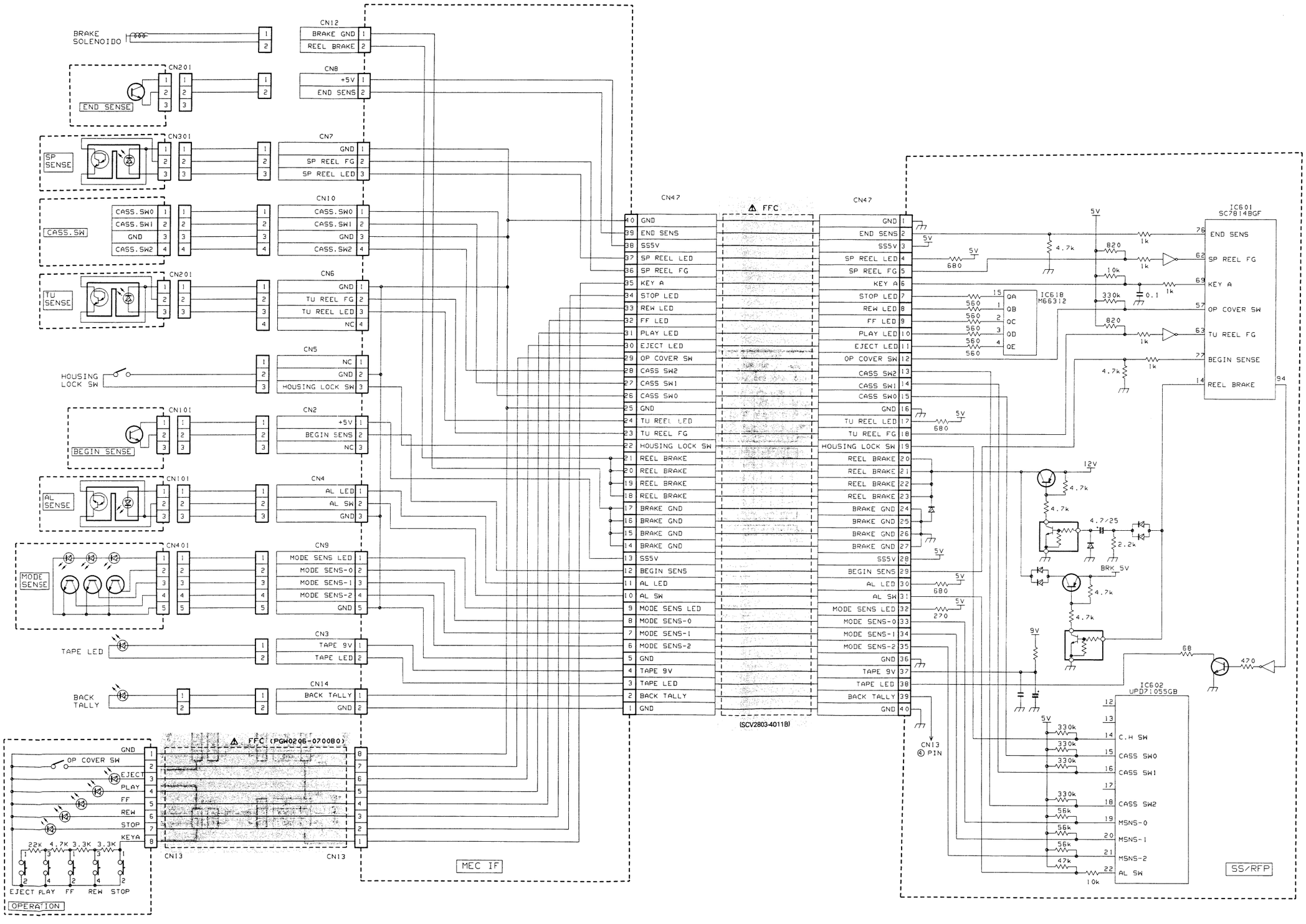
BRAKE SOLENOIDO
CN12
BRAKE GND
REEL BRAKE
CN201
END SENSE
CN8
+5V
END SENS
CN301
SP SENSE
CN7
GND
SP REEL FG
SP REEL LED
CASS.SW
CN10
CASS.SW0
CASS.SW1
GND
CASS.SW2
CN201
TU SENSE
CN6
GND
TU REEL FG
TU REEL LED
NC
HOUSING LOCK SW
CN5
NC
GND
HOUSING LOCK SW
CN101
BEGIN SENSE
CN2
+5V
BEGIN SENS
NC
CN101
AL SENSE
CN4
AL LED
AL SW
GND
CN401
MODE SENSE
CN9
MODE SENS LED
MODE SENS-0
MODE SENS-1
MODE SENS-2
GND
TAPE LED
CN3
TAPE 9V
TAPE LED
BACK TALLY
CN14
BACK TALLY
GND
CN47
FFC
CN47
(SCV2803-4011B)
MEC IF
OP COVER SW
EJECT
PLAY
FF
REW
STOP
KEYA
22K 4.7K 3.3K 3.3K
EJECT PLAY FF REW STOP
OPERATION
FFC (PGW020G-0700B0)
CN13
CN13
CN13
④ PIN
IC601
SC7814BGF
END SENS
SP REEL FG
KEY A
OP COVER SW
TU REEL FG
BEGIN SENSE
REEL BRAKE
IC618
M66312
IC602
UPD71055GB
C.H SW
CASS SW0
CASS SW1
CASS SW2
MSNS-0
MSNS-1
MSNS-2
AL SW
SS/RFP
5V
12V
9V
BRK 5V

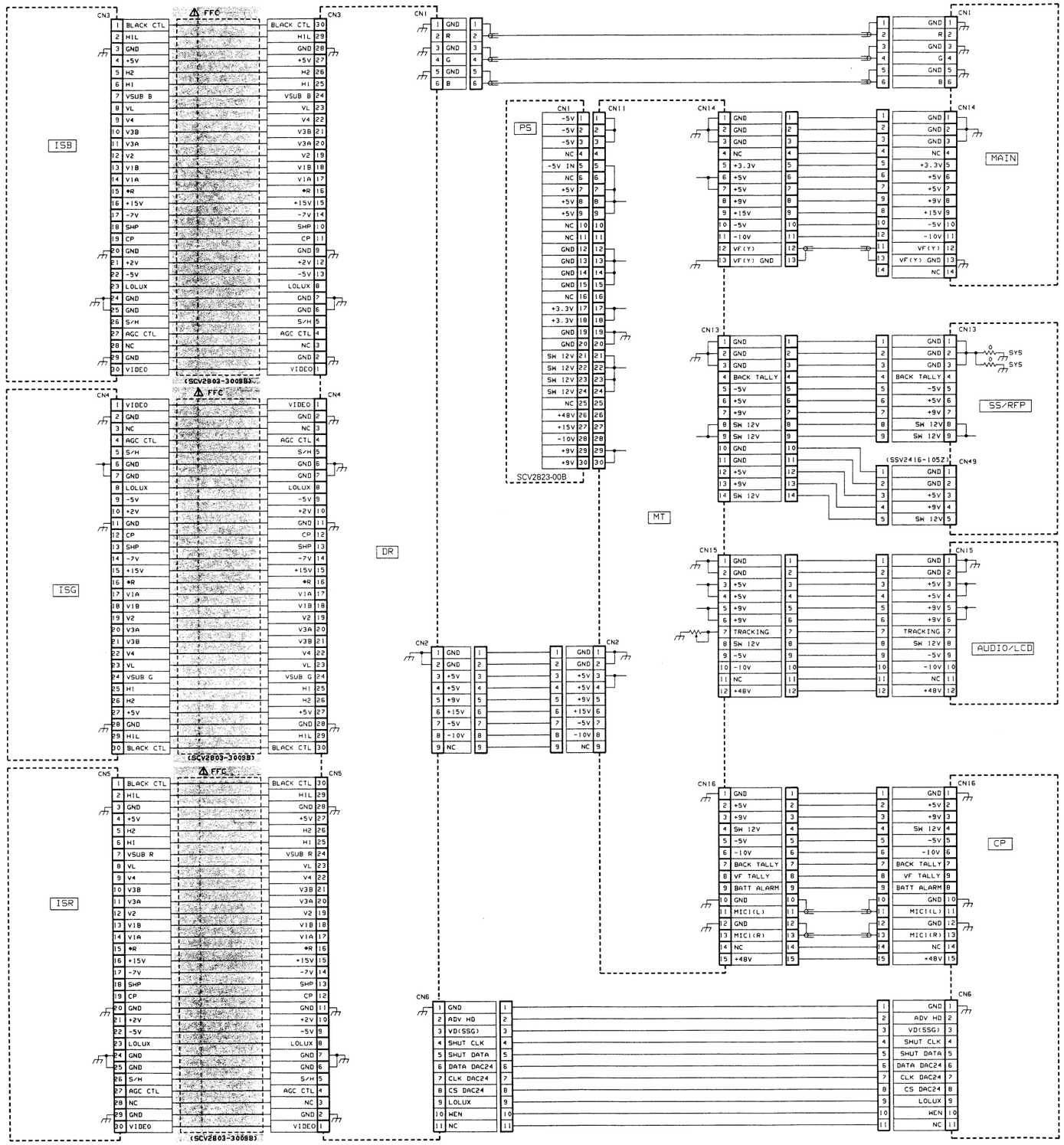
ISB
ISG
ISR
DR
PS
MT
MAIN
SS/RFP
AUDIO/LCD
CP
SCV2823-00B
(SCV2803-3008B)
(SSV2416-1052)
FFC

— **DIAGRAM 5/6** —

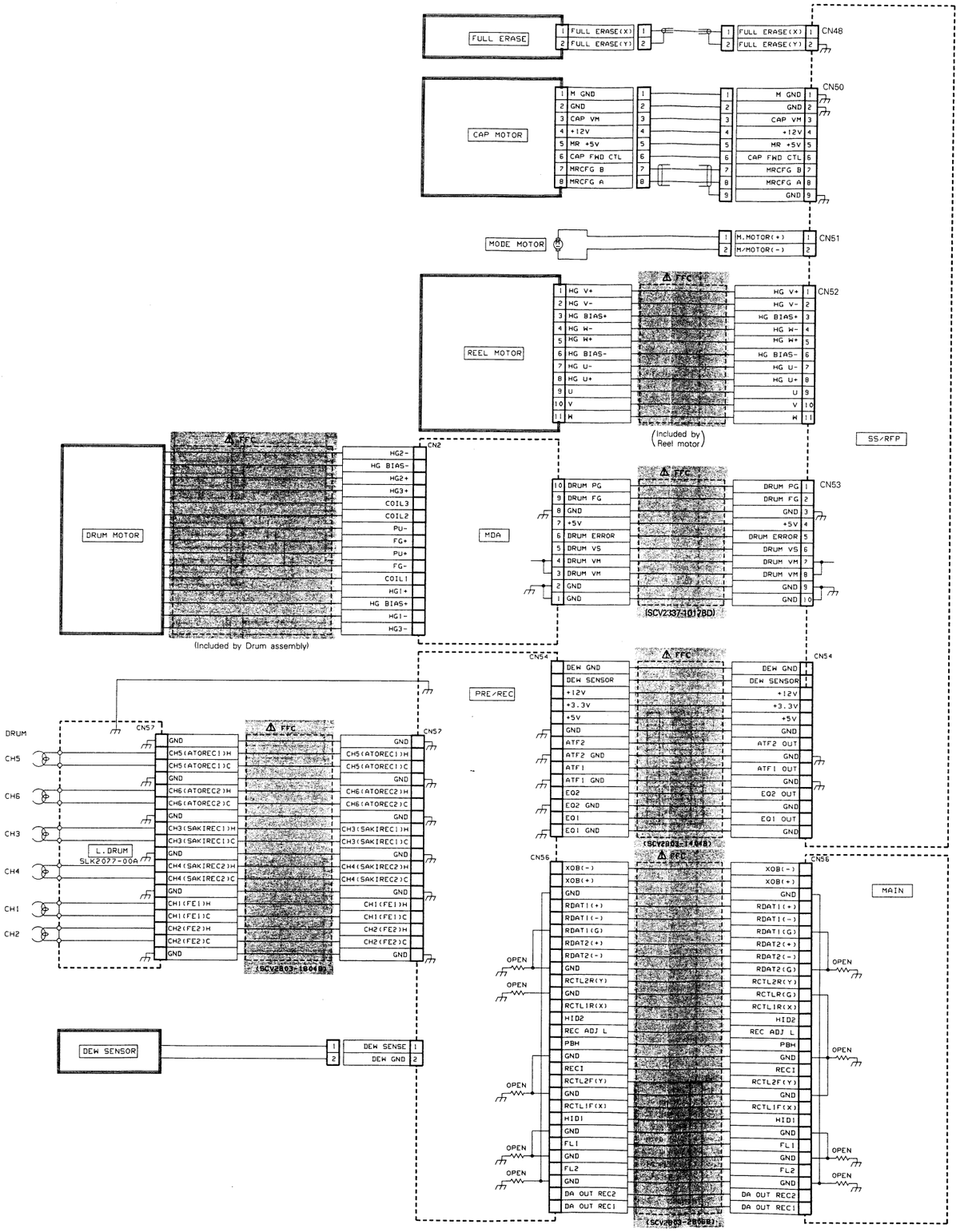
FULL ERASE
FULL ERASE(X)
FULL ERASE(Y)
CN48
CAP MOTOR
M GND
GND
CAP VM
+12V
MR +5V
CAP FWD CTL
MRCFG B
MRCFG A
CN50
MODE MOTOR
M.MOTOR(+)
M/MOTOR(-)
CN51
REEL MOTOR
HG V+
HG V-
HG BIAS+
HG W-
HG W+
HG BIAS-
HG U-
HG U+
U
V
W
CN52
(Included by Reel motor)
SS/RFP
DRUM MOTOR
HG2-
HG BIAS-
HG2+
HG3+
COIL3
COIL2
PU-
FG+
PU+
FG-
COIL1
HG1+
HG BIAS+
HG1-
HG3-
CN2
(Included by Drum assembly)
MDA
DRUM PG
DRUM FG
+5V
DRUM ERROR
DRUM VS
DRUM VM
CN53
(SCV2337-1017BD)
CN54
DEW SENSOR
+3.3V
ATF2
ATF2 GND
ATF1
ATF1 GND
EQ2
EQ2 GND
EQ1
EQ1 GND
ATF2 OUT
ATF1 OUT
EQ2 OUT
EQ1 OUT
(SCV2803-1404B)
PRE/REC
DRUM
CN57
CH5
CH6
CH3
CH4
CH1
CH2
L.DRUM
SLK2077-00A
CH5(ATOREC1)H
CH5(ATOREC1)C
CH6(ATOREC2)H
CH6(ATOREC2)C
CH3(SAKIREC1)H
CH3(SAKIREC1)C
CH4(SAKIREC2)H
CH4(SAKIREC2)C
CH1(FE1)H
CH1(FE1)C
CH2(FE2)H
CH2(FE2)C
(SCV2803-1404B)
DEW SENSOR
DEW SENSE
DEW GND
CN56
XOB(-)
XOB(+)
RDAT1(+)
RDAT1(-)
RDAT1(G)
RDAT2(+)
RDAT2(-)
RDAT2(G)
RCTL2R(Y)
RCTL1R(G)
RCTL1R(X)
HID2
REC ADJ L
PBH
REC1
RCTL2F(Y)
RCTL1F(X)
HID1
FL1
FL2
DA OUT REC2
DA OUT REC1
OPEN
MAIN
(SCV2803-2808B)

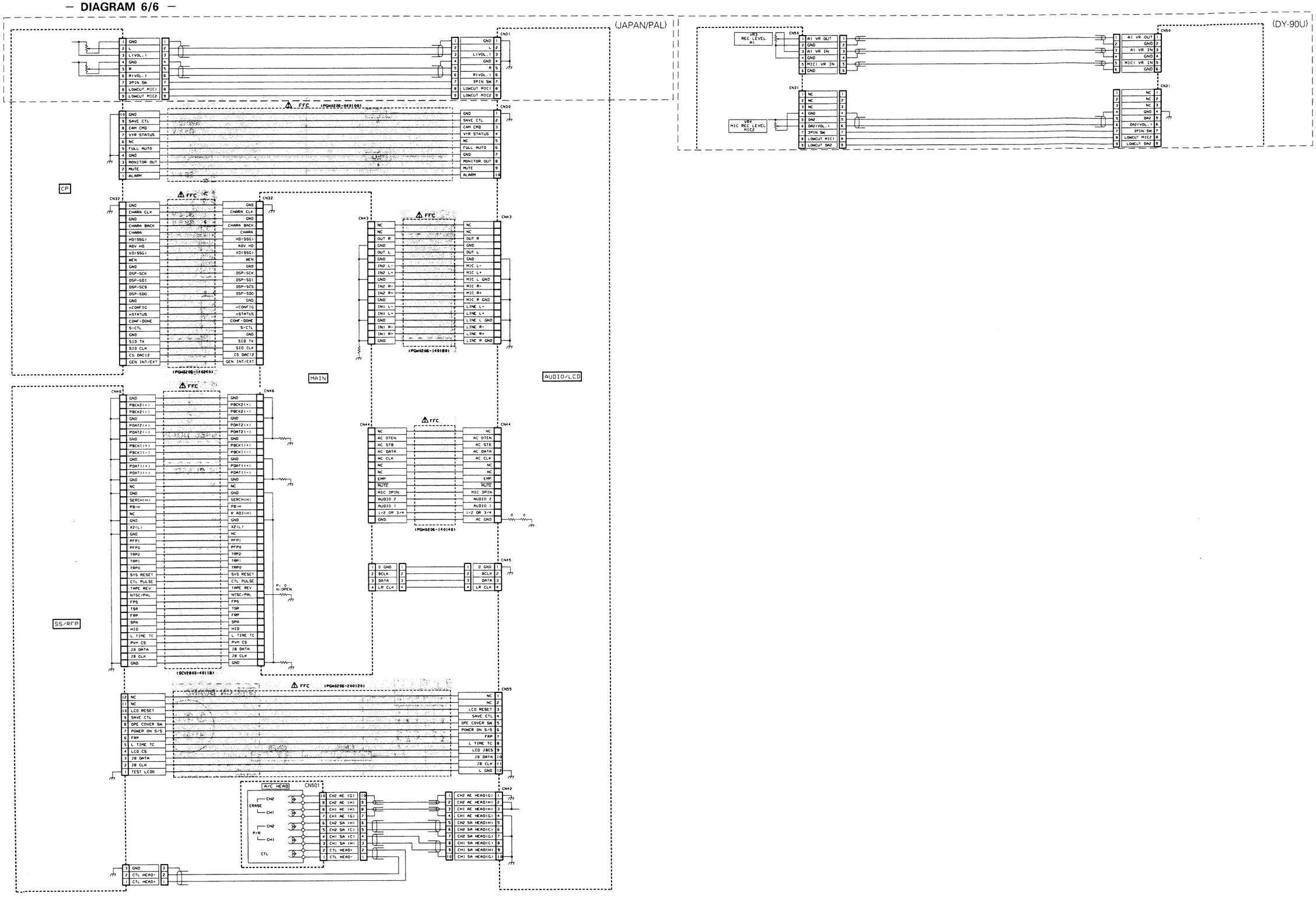
(JAPAN/PAL)
(DY-90U)
CP
MAIN
AUDIO/LCD
SS/RFP
A/C HEAD
CN501
CN30
CN31
CN32
CN41
CN42
CN43
CN44
CN45
CN46
CN50
CN55
VR3
REC LEVEL
AI
VR4
MIC REC LEVEL
MIC2
(PGH0206-040100)
(PGH0206-140240)
(PGH0206-140180)
(PGH0206-140140)
(PGH0206-200120)
(SCV2803-40118)
GND
L
L(VOL.)
R
R(VOL.)
3PIN SW
LOWCUT MIC1
LOWCUT MIC2
SAVE CTL
CAM CMD
VTR STATUS
NC
FULL AUTO
MONITOR OUT
MUTE
ALARM
CHARA CLK
CHARA DATA
CHARA
HD(SSG)
ADV HD
VD(SSG)
WEN
DSP-SCK
DSP-SDI
DSP-SCS
DSP-SDO
nCONFIG
nSTATUS
CONF-DONE
S-CTL
SIO TX
SIO CLK
CS DAC12
GEN INT/EXT
OUT R
OUT L
IN2 L-
IN2 L+
IN2 R-
IN2 R+
IN1 L-
IN1 L+
IN1 R-
IN1 R+
MIC L-
MIC L+
MIC L GND
MIC R-
MIC R+
MIC R GND
LINE L-
LINE L+
LINE L GND
LINE R-
LINE R+
LINE R GND
AC OTEN
AC STB
AC DATA
AC CLK
EMP
MUTE
MIC 3PIN
AUDIO 2
AUDIO 1
1/2 OR 3/4
AC GND
D GND
BCLK
DATA
LR CLK
PBCK2(+)
PBCK2(-)
PDAT2(+)
PDAT2(-)
PBCK1(+)
PBCK1(-)
PDAT1(+)
PDAT1(-)
SERCH(H)
PB-H
R ADJ(H)
XZ(L)
PFP1
PFP0
TRP2
TRP1
TRP0
SYS RESET
CTL PULSE
TAPE REV
NTSC/PAL
FPS
TSR
FRP
SPA
HID
L TIME TC
PWM CS
JB DATA
JB CLK
LCD RESET
OPE COVER SW
POWER ON S/S
LCD CS
LCD JBCS
TEST LCDG
CH2 AE (G)
CH2 AE (H)
CH1 AE (H)
CH1 AE (G)
CH2 SA (H)
CH2 SA (C)
CH1 SA (H)
CTL HEAD+
CTL HEAD-
ERASE
P/R
CTL
AI VR OUT
AI VR IN
MIC1 VR IN
DA2
DA2(VOL.)
CH2 AE HEAD(G)
CH2 AE HEAD(H)
CH1 AE HEAD(H)
CH1 AE HEAD(G)
CH2 SA HEAD(H)
CH2 SA HEAD(C)
CH1 SA HEAD(H)
CH1 SA HEAD(G)
P: 0
N: OPEN

4.3 POWER SYSTEM BLOCK DIAGRAM

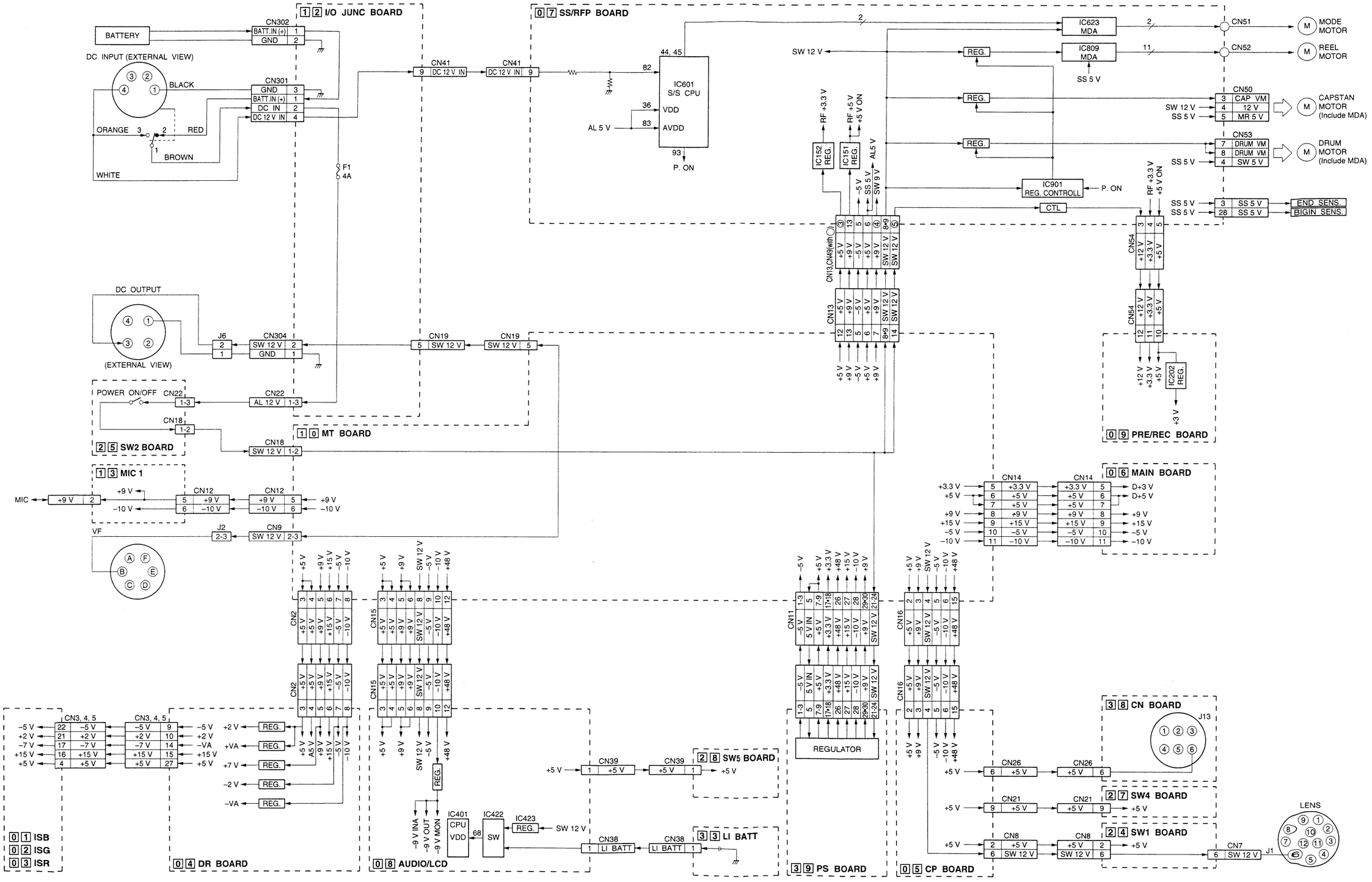

4.4 IS,DR BLOCK DIAGRAM

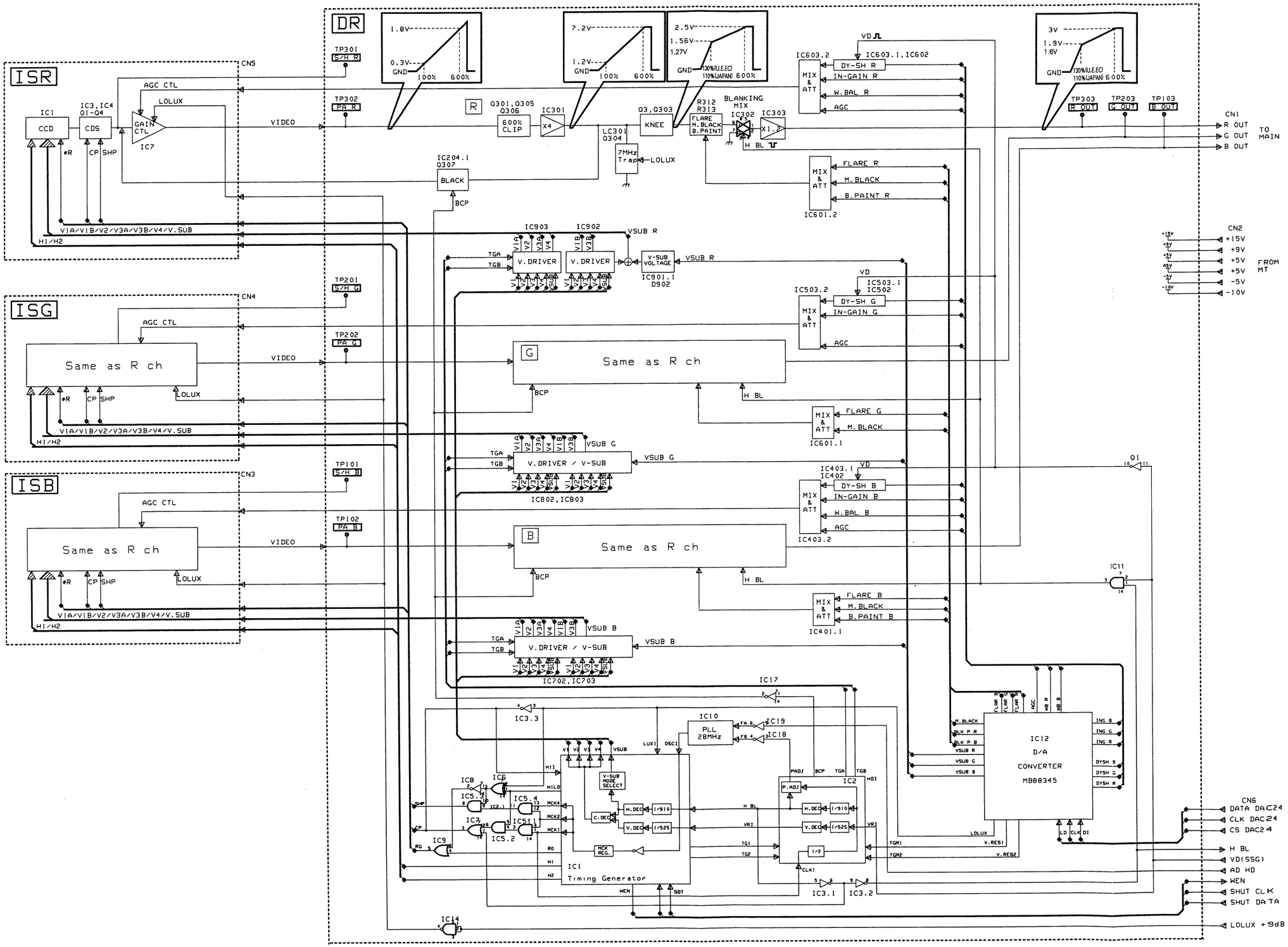

4.5 CP BLOCK DIAGRAM

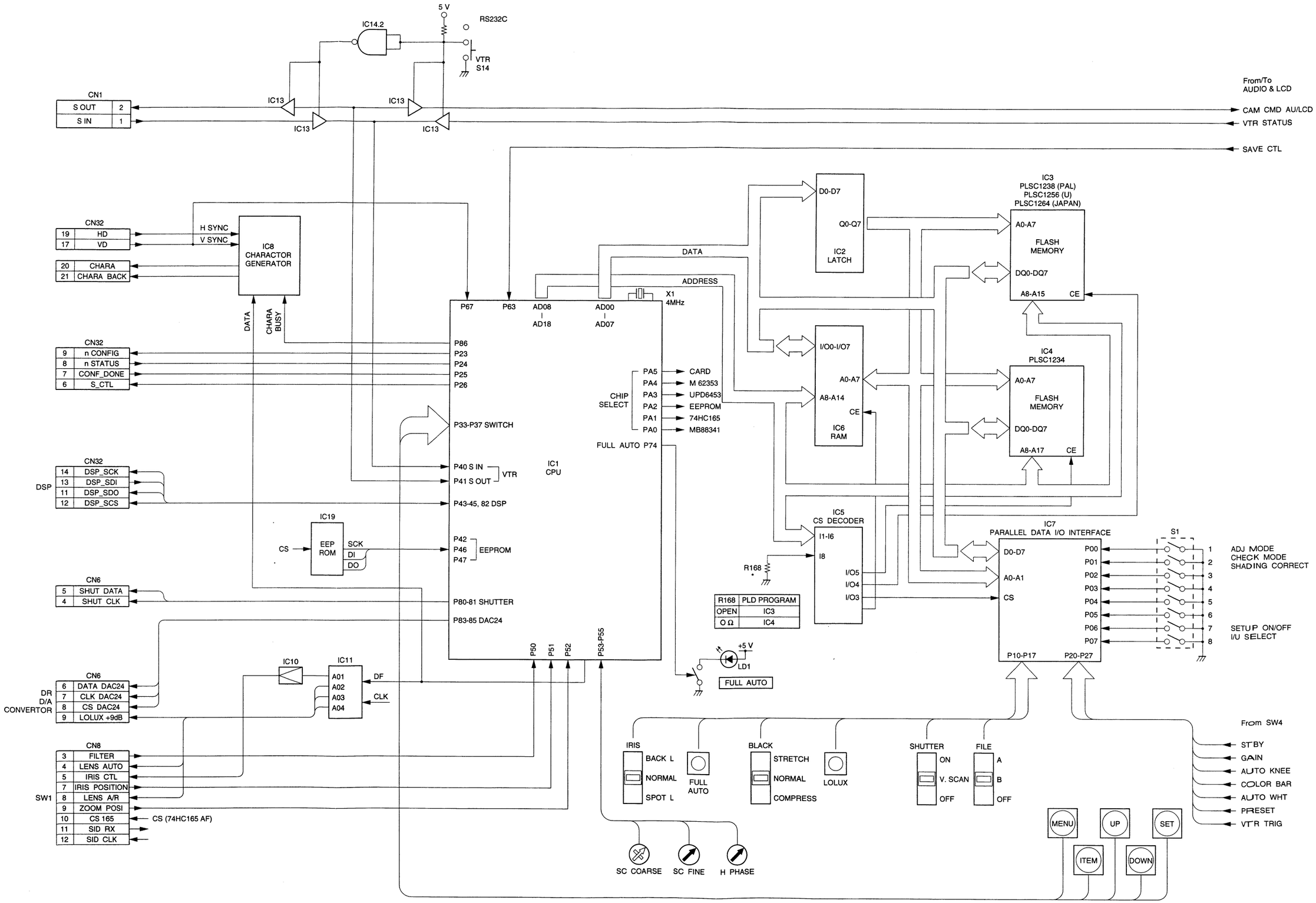

4-12

4.6 MAIN BLOCK DIAGRAM

– MAIN BOARD (OVERALL) & AV U-COM BLOCK DIAGRAM 1/3 –

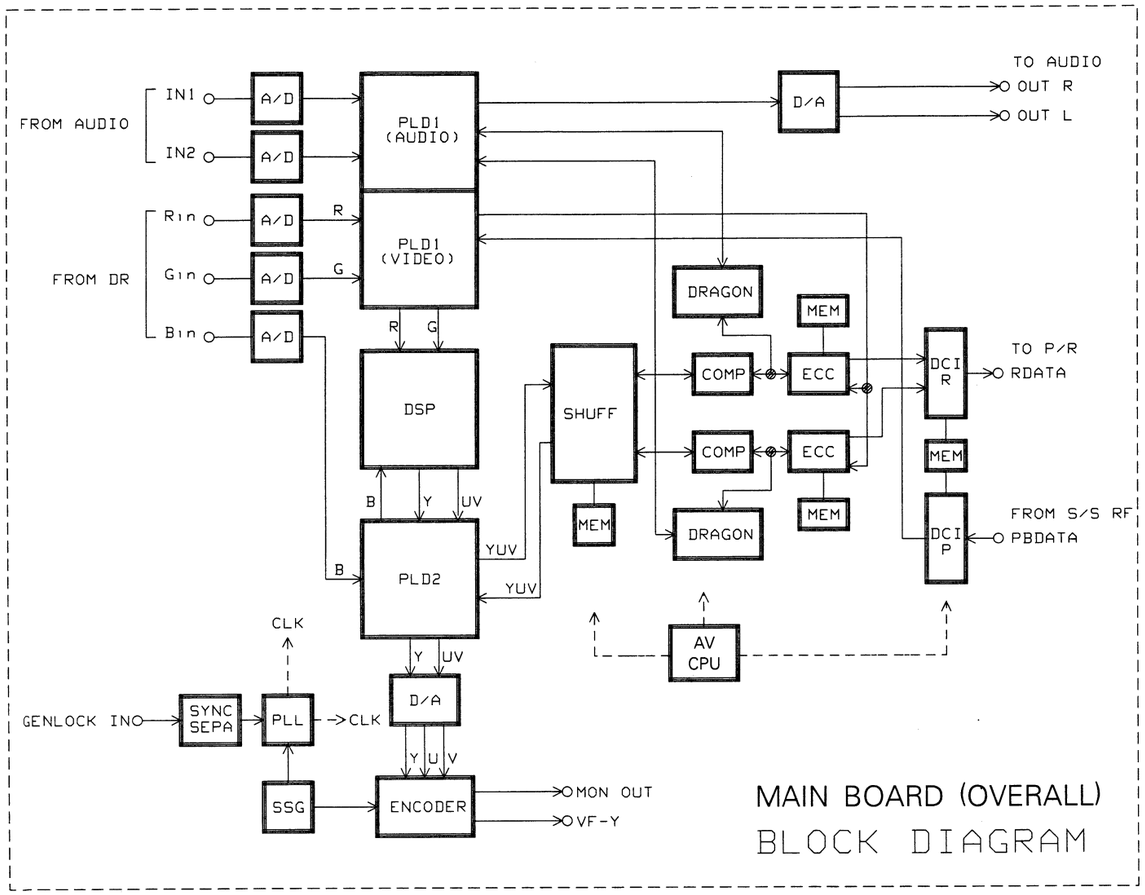

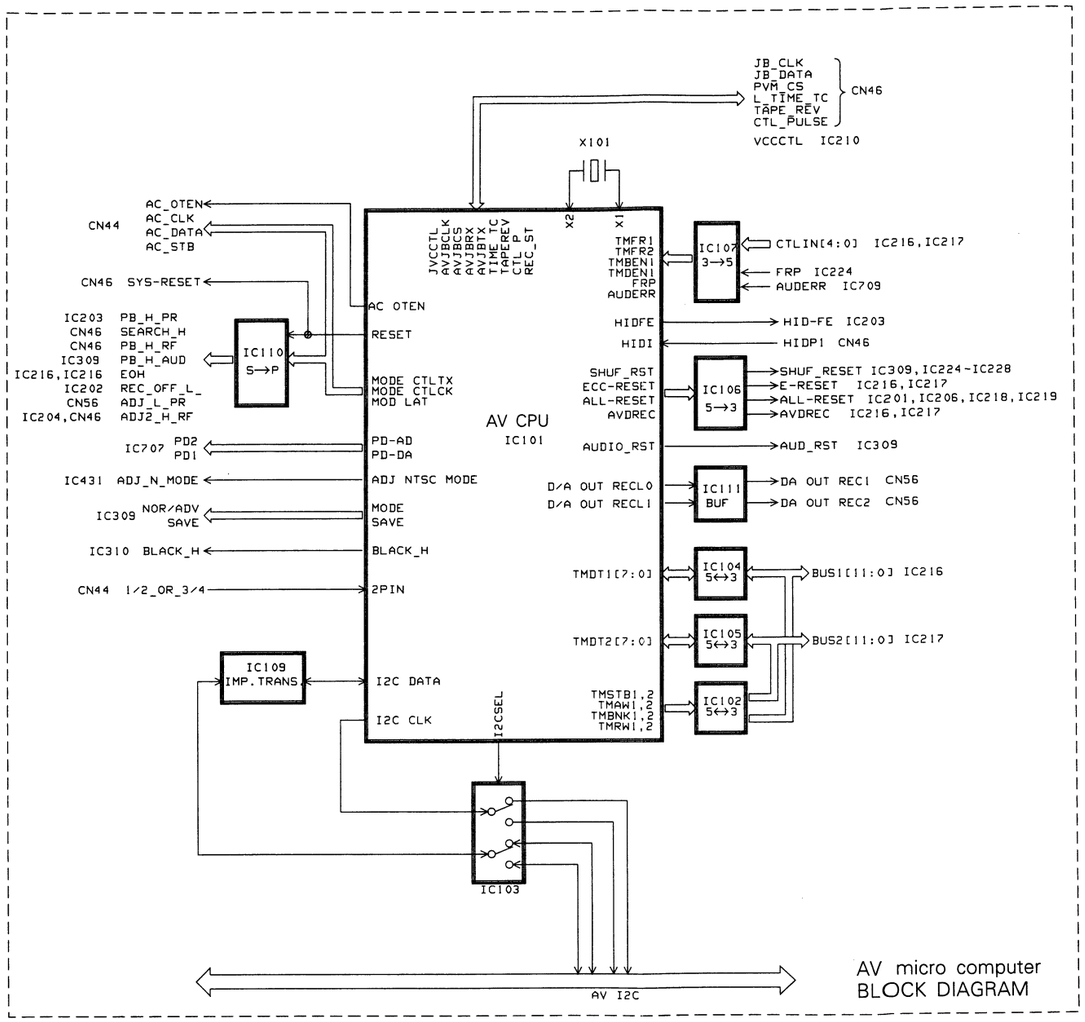

4-13

– MAIN (CAMERA PROCESS) BLOCK DIAGRAM 2/3 –

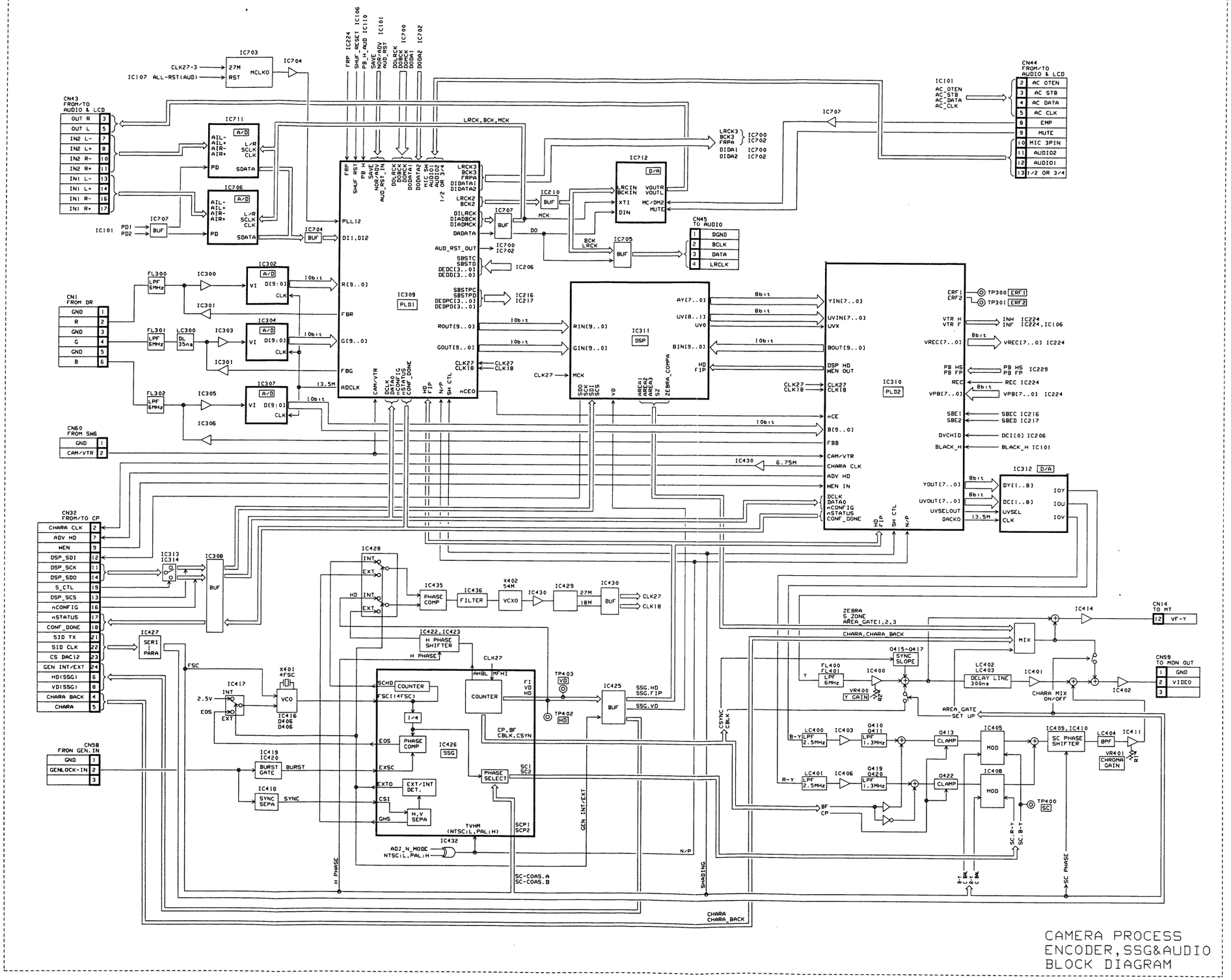

CAMERA PROCESS
ENCODER, SSG&AUDIO
BLOCK DIAGRAM

4-14

– MAIN (PV PROCESS & AUDIO) BLOCK DIAGRAM 3/3 –

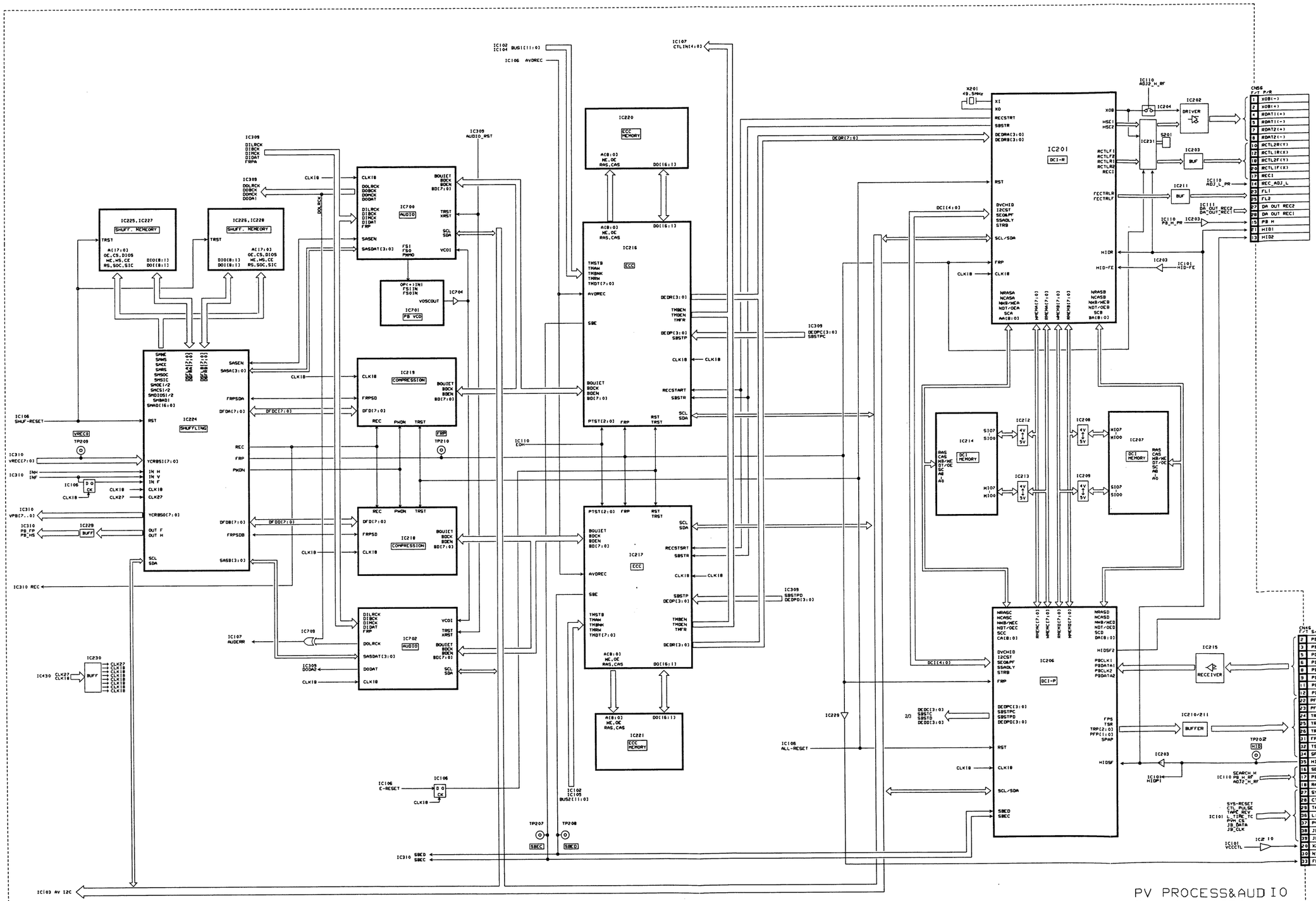

4.7 SS/RFP BLOCK DIAGRAM

– SS/RFP(RF PROCESS) BLOCK DIAGRAM 1/2 –

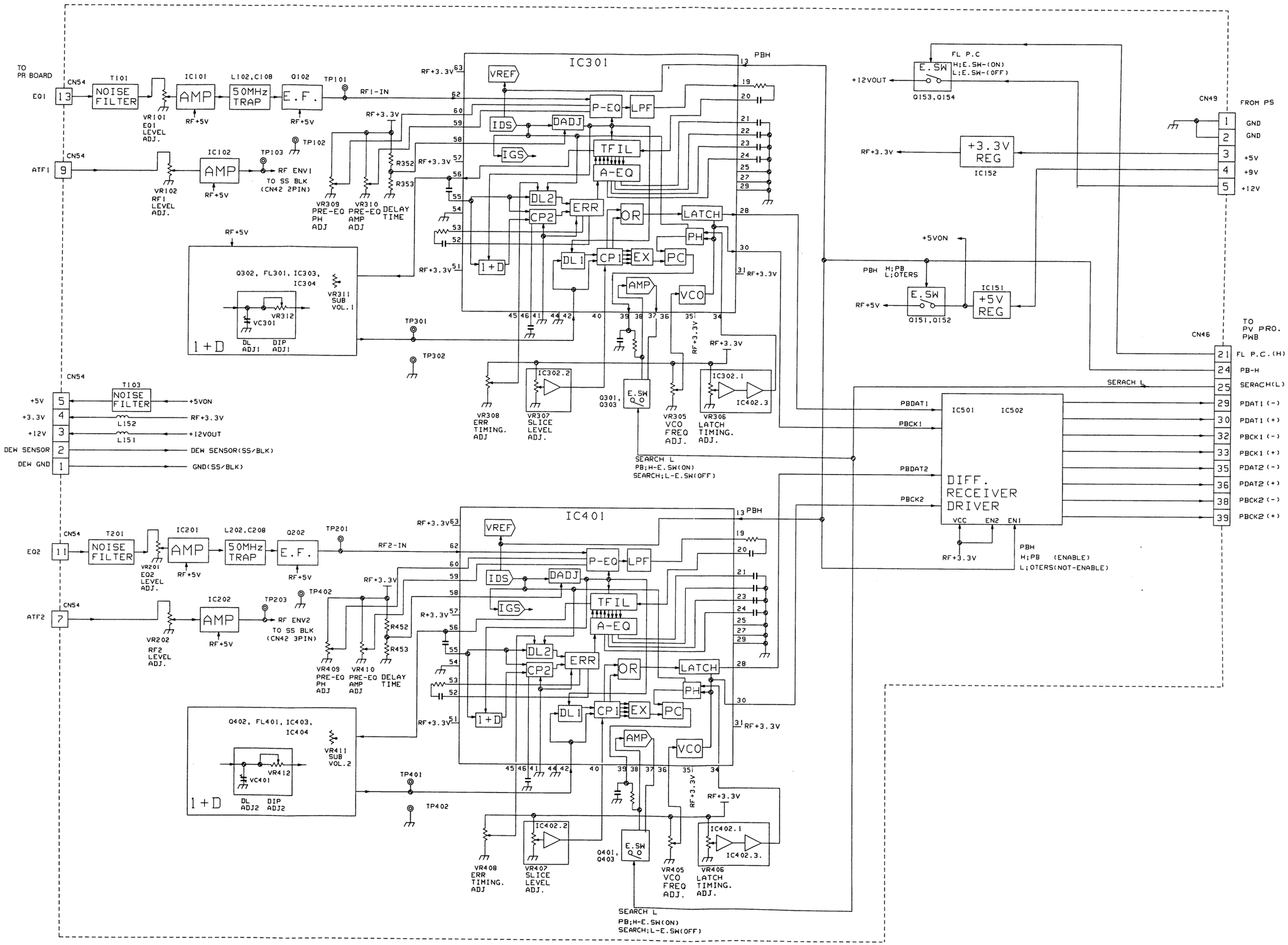

4-16

– SS/RFP(SYSCON & SERVO) BLOCK DIAGRAM 2/2 –

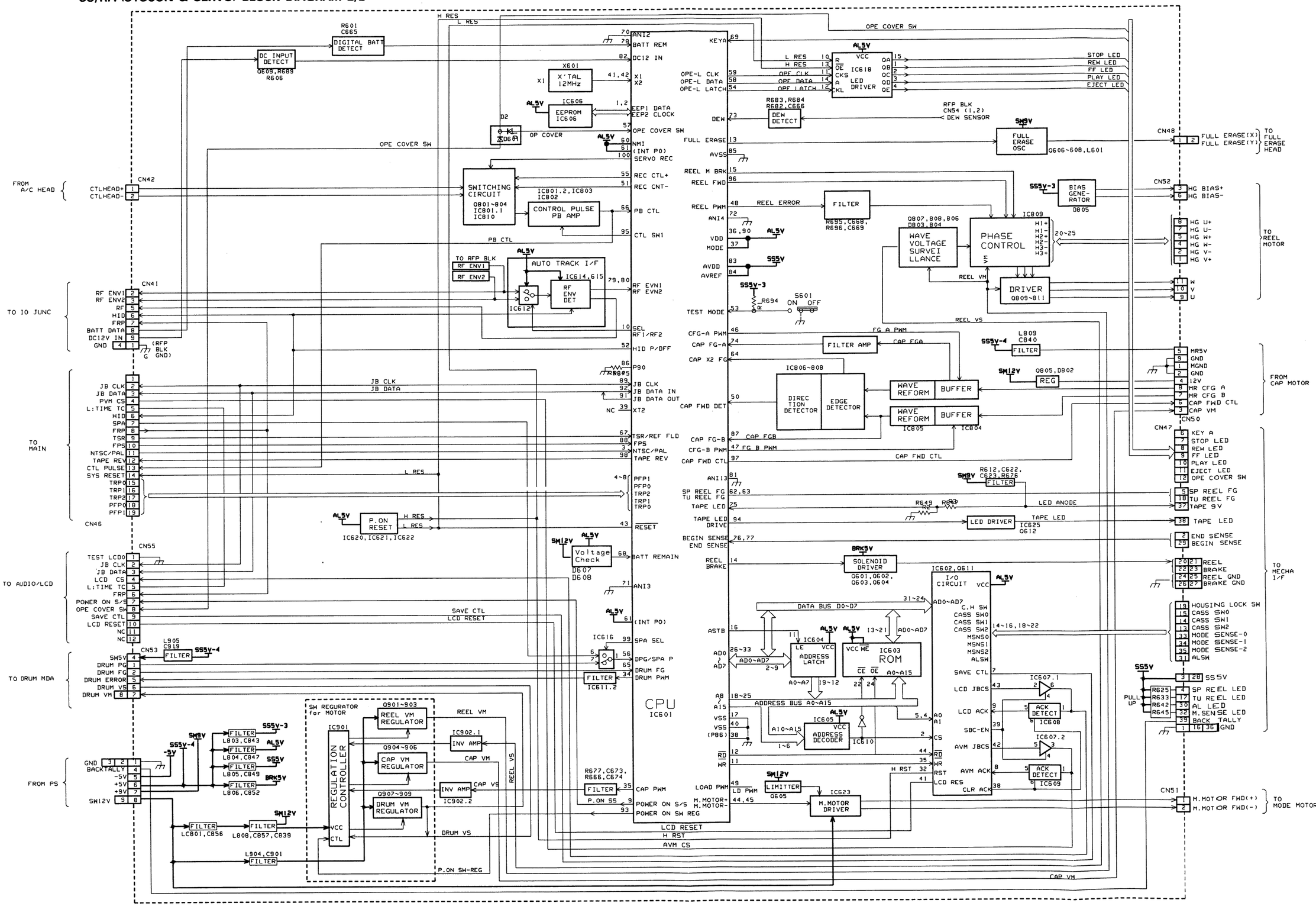

4-17

4.8 AUDIO & LCD BLOCK DIAGRAM

– AUDIO & LCD BLOCK DIAGRAM 1/2 –

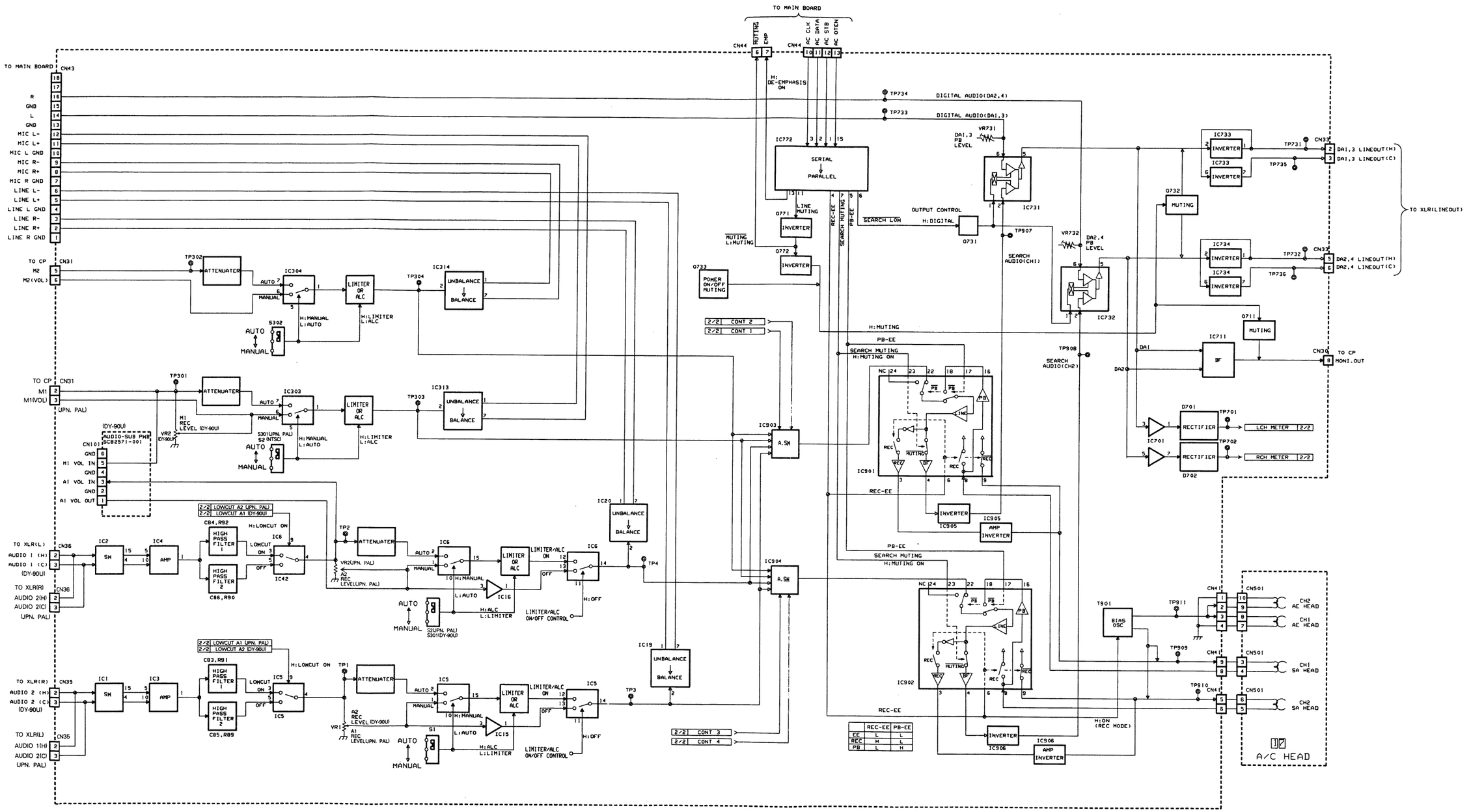

— AUDIO & LCD BLOCK DIAGRAM 2/2 —

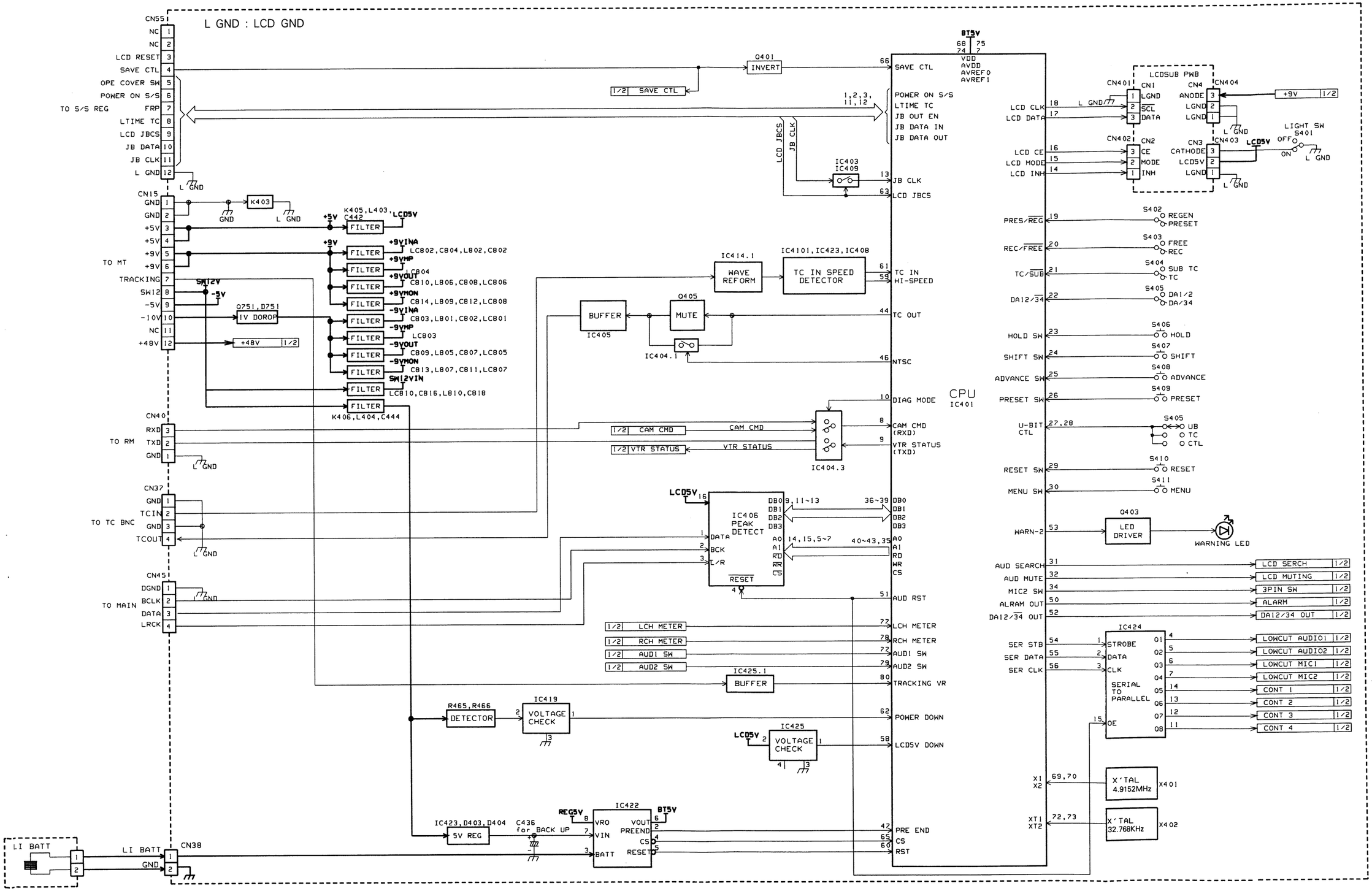

4.9 PR BLOCK DIAGRAM

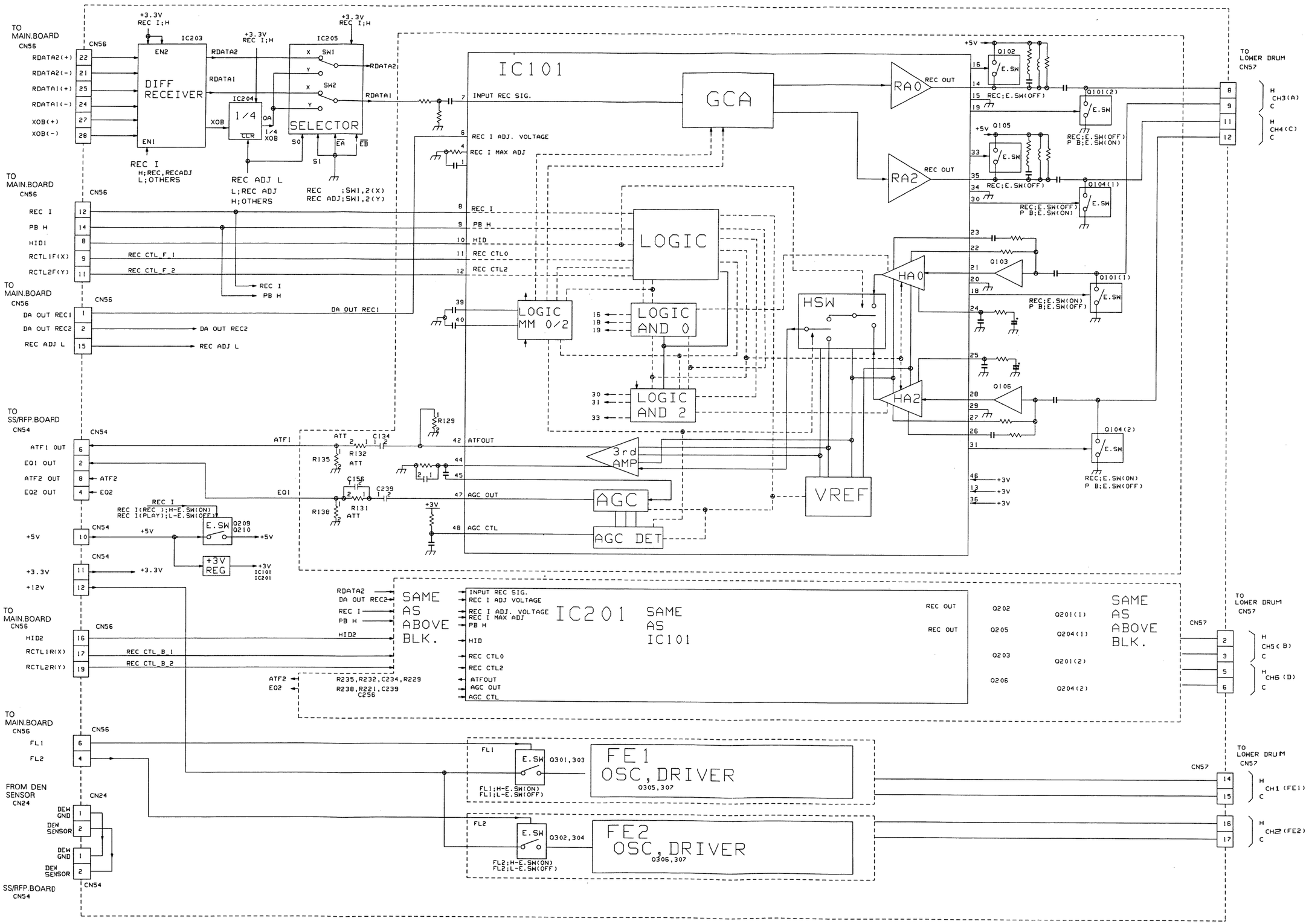

4.10 DR BOARD INNER PATTERN

— INNER PATTERN (SIDE A) —

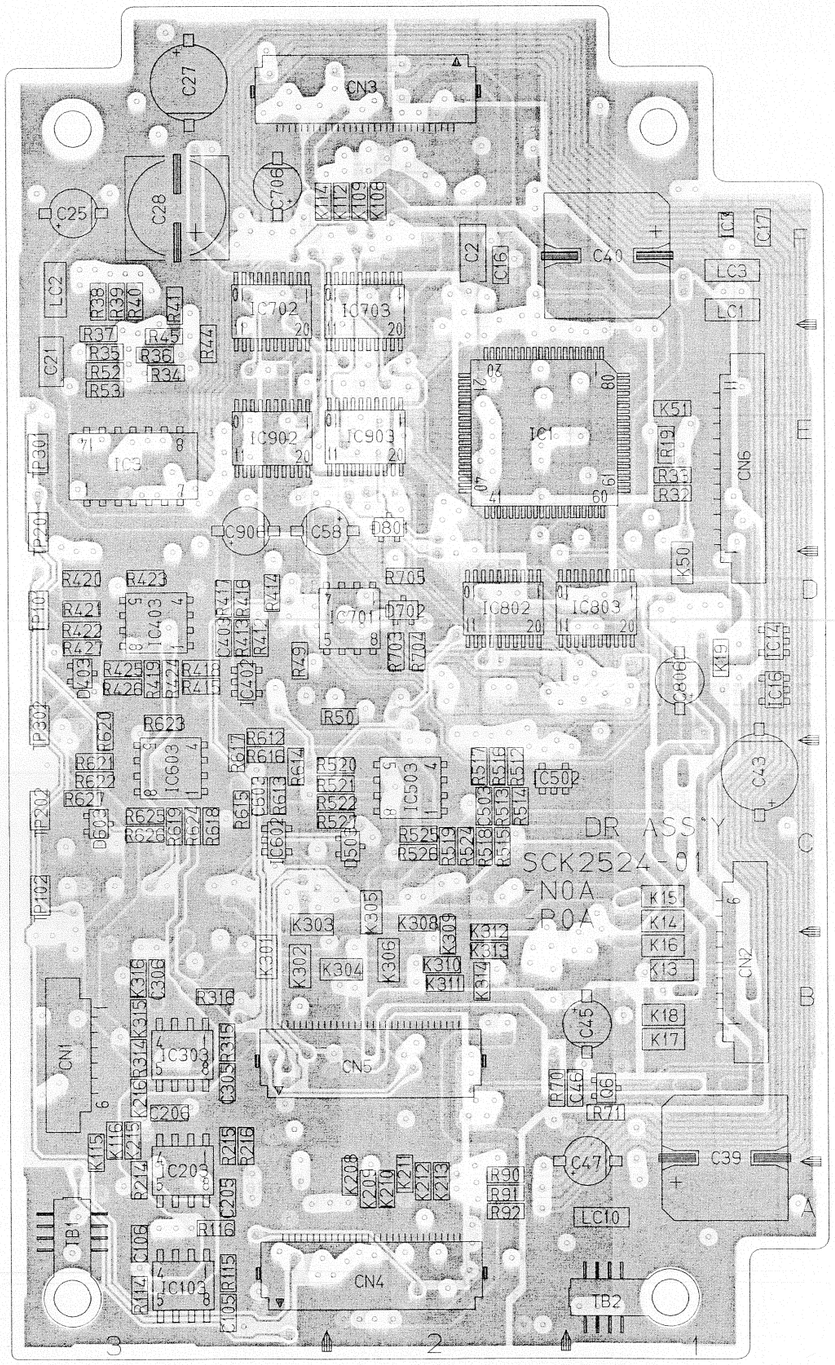

— INNER PATTERN (SIDE B) —

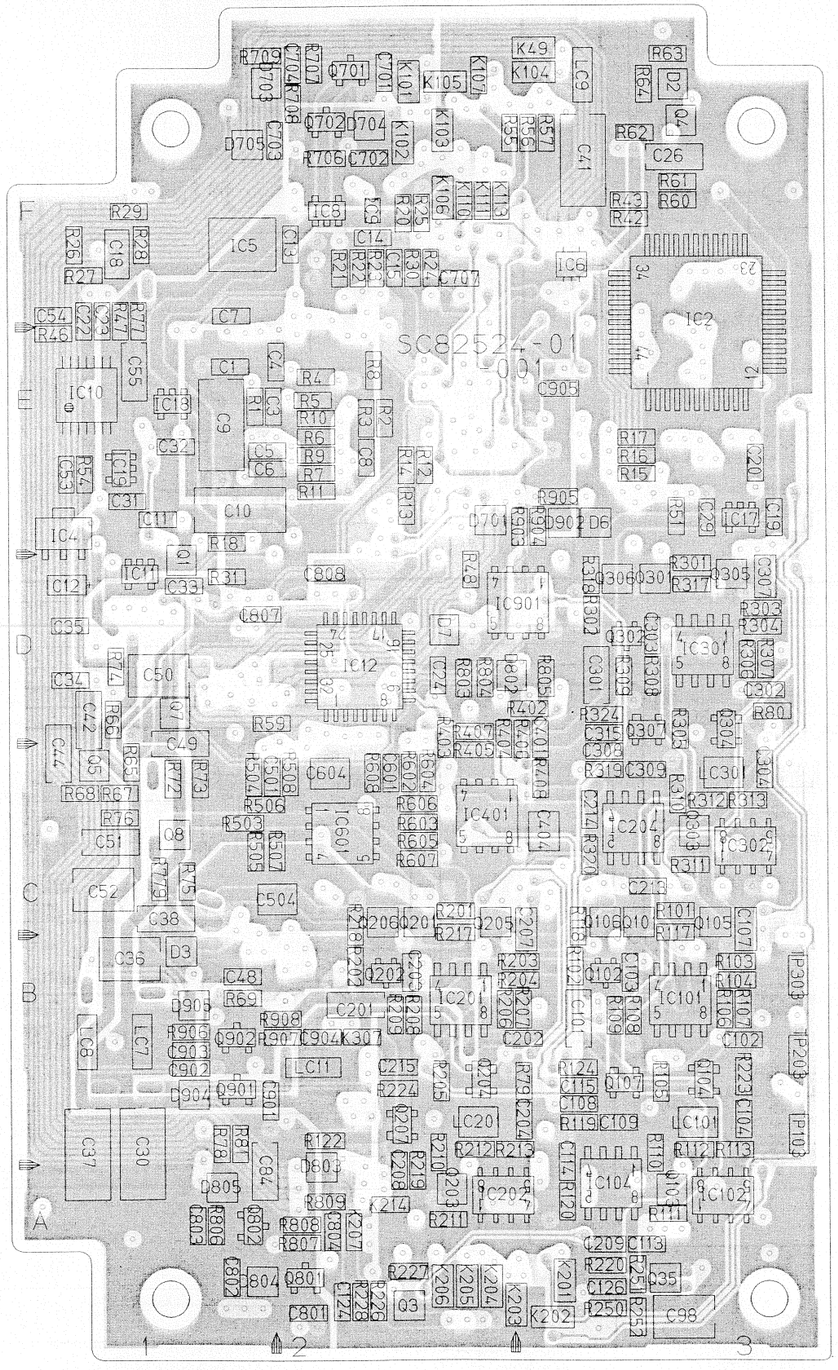

4.11 DR BOARD SCHEMATIC DIAGRAM [0][1]

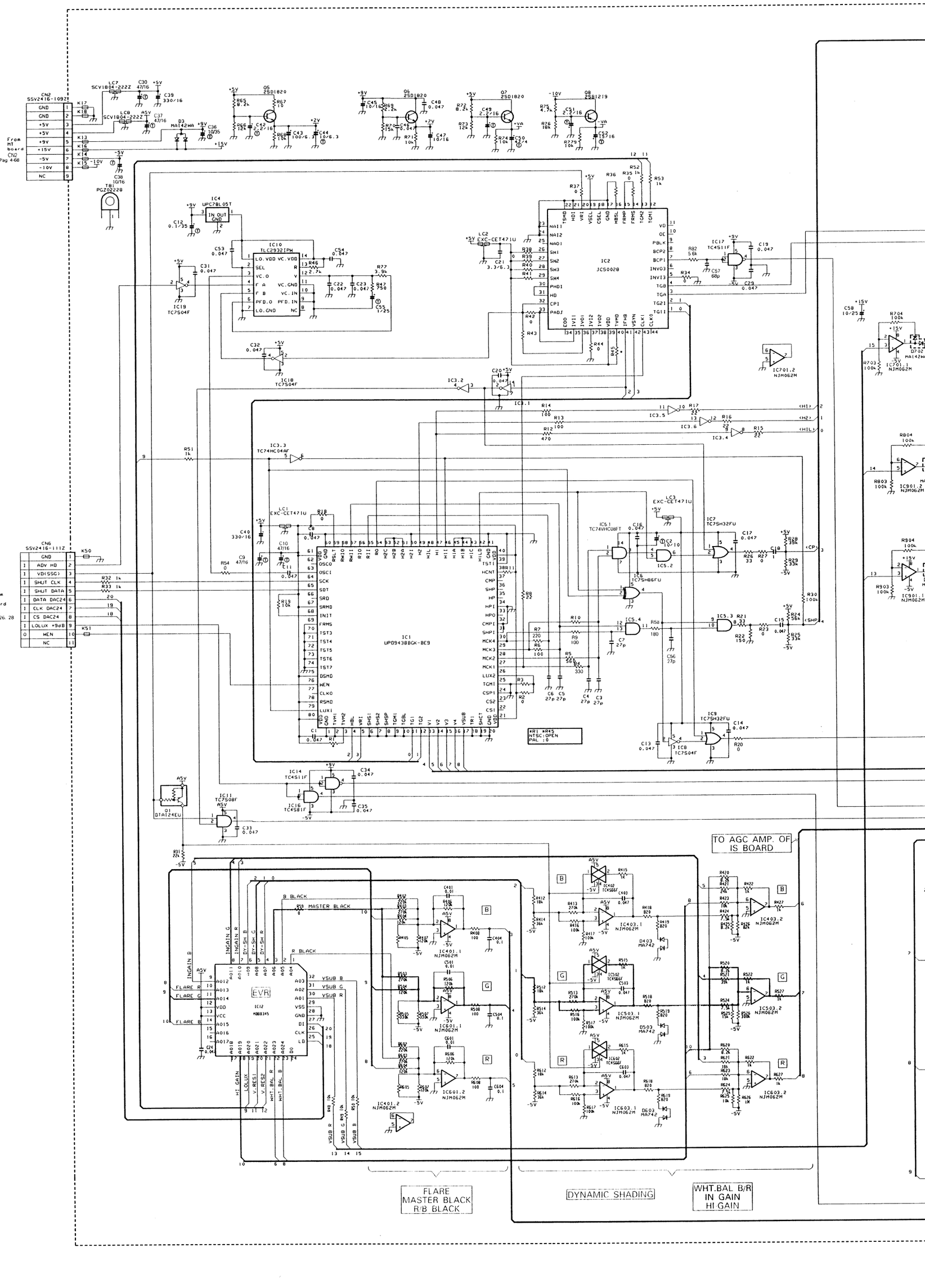

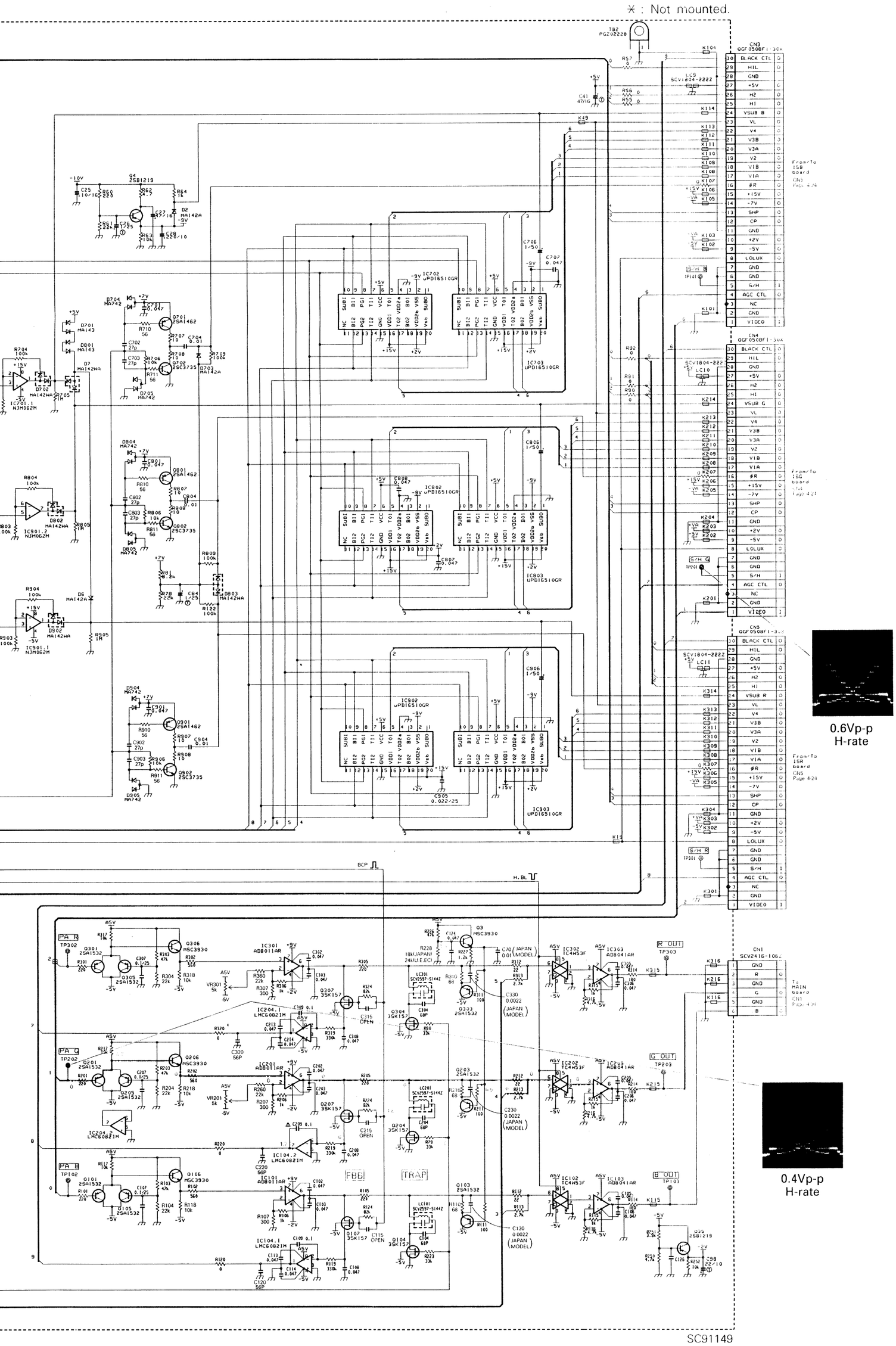

0.6Vp-p
H-rate

0.4Vp-p
H-rate

SC91149

4.12 DR CIRCUIT BOARD

— SIDE A —

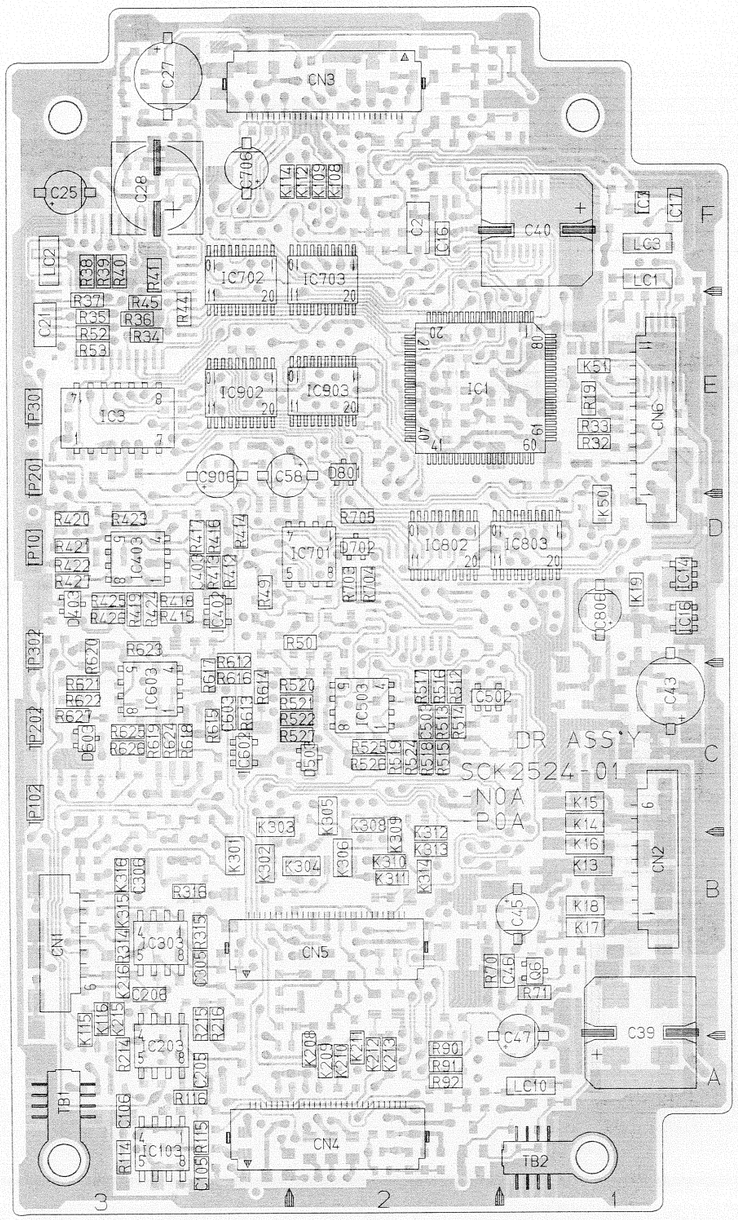

— SIDE B —

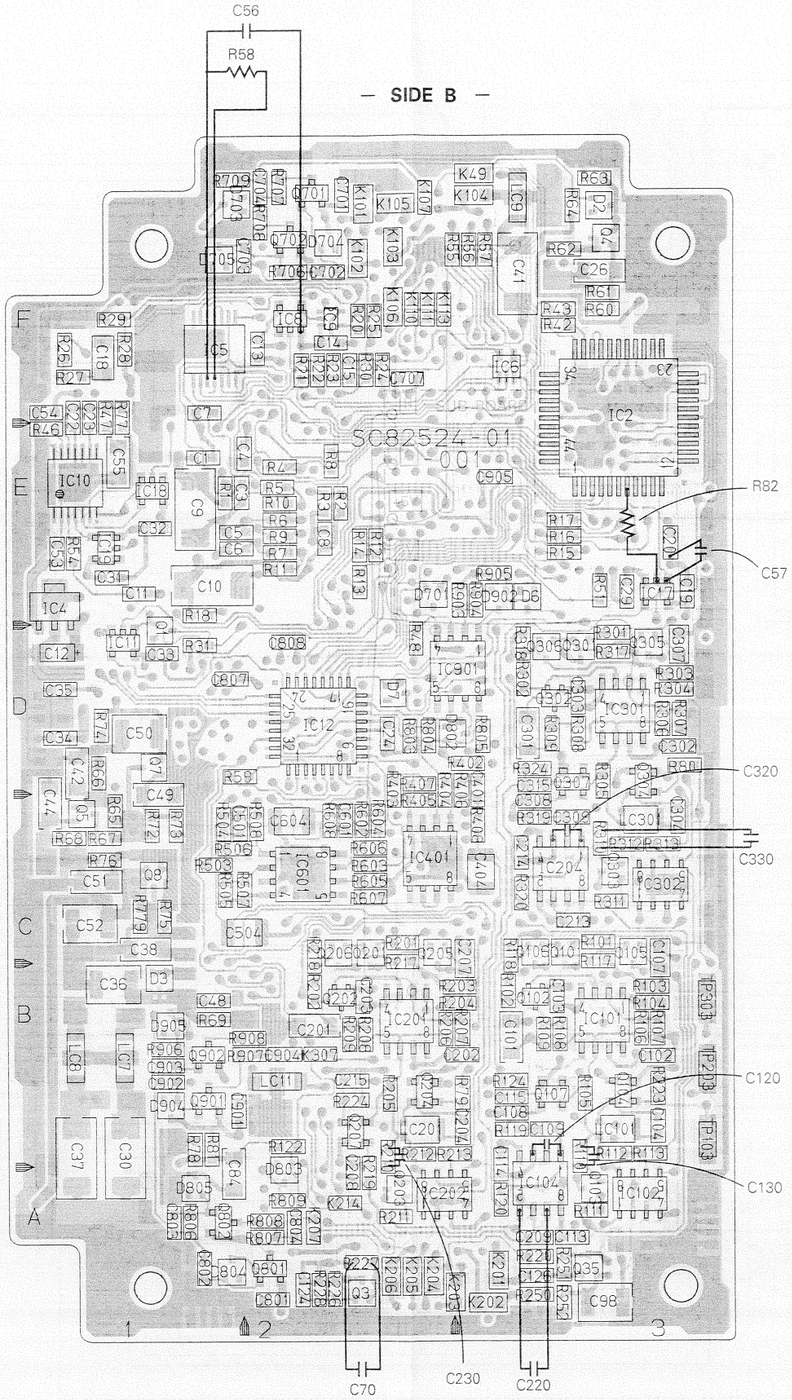

● **ADDRESS TABEL OF BOARD PARTS**

Each address may have an address error by one interval.

A-1C
Side — Y axis
X axis

IC1	A-2E	D403	A-3D	R70	A-2B	R324	B-3C	R905	B-3D	C209	B-3A	K301	A-3B		
IC2	B-3E	D503	A-2C	R71	A-1B	R402	B-2C	R906	B-1B	C213	B-3C	K302	A-2B		
IC3	A-3D	D603	A-3C	R72	B-1C	R403	B-2C	R907	B-2B	C214	B-3C	K303	A-2B		
IC4	B-1D	D701	B-2D	R73	B-1C	R404	B-2C	R908	B-2B	C215	B-2B	K304	A-2B		
IC5	B-1E	D702	A-2D	R74	B-1D	R405	B-2C			C301	B-3D	K305	A-2B		
IC6	B-3E	D703	B-1F	R75	B-1C	R406	B-2C	C1	B-1E	C302	B-3C	K306	A-2B		
IC7	A-1F	D704	B-2F	R76	B-1C	R407	B-2C	C2	A-2E	C303	B-3D	K307	B-2B		
IC8	B-2F	D705	B-1F	R77	B-1E	R408	B-2C	C3	B-1E	C304	B-3C	K308	A-2B		
IC9	B-2F	D801	A-2D	R78	B-1A	R412	A-3D	C4	B-1E	C305	A-3B	K309	A-2B		
IC10	B-1E	D802	B-2D	R79	B-2B	R413	A-3D	C5	B-1E	C306	A-3B	K310	A-2B		
IC11	B-1D	D803	B-2A	R80	B-3C	R414	A-3D	C6	B-1D	C307	B-3D	K311	A-2B		
IC12	B-2D	D804	B-1A	R81	B-1A	R415	A-3C	C7	B-1E	C308	B-3C	K312	A-2B		
IC14	A-1D	D805	B-1A	R90	A-2A	R416	A-3D	C8	B-2E	C309	B-3C	K313	A-2B		
IC16	A-1C	D902	B-3D	R91	A-2A	R417	A-3D	C9	B-1E	C315	B-3C	K314	A-2B		
IC17	B-3D	D904	B-1B	R92	A-2A	R418	A-3D	C10	B-1D	C401	B-2C	K315	A-3B		
IC18	B-1E	D905	B-1B	R101	B-3B	R419	A-3C	C11	B-1D	C403	A-3D	K316	A-3B		
IC19	B-1D			R102	B-3B	R420	A-3D	C12	B-1D	C404	B-2C				
IC101	B-3B	R1	B-1E	R103	B-3B	R421	A-3D	C13	B-2E	C501	B-1C	LC1	A-1E		
IC102	B-3A	R2	B-2E	R104	B-3B	R422	A-3D	C14	B-2E	C503	A-2C	LC2	A-3E		
IC103	A-3A	R3	B-2E	R105	B-3B	R423	A-3D	C15	B-2E	C504	B-1C	LC3	A-1E		
IC104	B-3A	R4	B-2E	R106	B-3B	R424	A-3C	C16	A-2E	C601	B-2C	LC7	B-1B		
IC201	B-2B	R5	B-2E	R107	B-3B	R425	A-3D	C17	A-1E	C603	A-3C	LC8	B-1B		
IC202	B-2A	R6	B-2E	R108	B-3B	R426	A-3C	C18	B-1E	C604	B-2C	LC9	B-3F		
IC203	A-3A	R7	B-2D	R109	B-3B	R427	A-3D	C19	B-3D	C701	B-2F	LC10	A-1A		
IC204	B-3C	R8	B-2E	R110	B-3A	R503	B-1C	C20	B-3D	C702	B-2F	LC11	B-2B		
IC301	B-3D	R9	B-2E	R111	B-3A	R504	B-1C	C21	A-3E	C703	B-1F	LC101	B-3B		
IC302	B-3C	R10	B-2E	R112	B-3A	R505	B-1C	C22	B-1E	C704	B-2F	LC201	B-2B		
IC303	A-3B	R11	B-2D	R113	B-3A	R506	B-1C	C23	B-1E	C706	A-3F	LC301	B-3C		
IC401	B-2C	R12	B-2D	R114	A-3A	R507	B-1C	C24	B-2D	C707	B-2E				
IC402	A-3C	R13	B-2D	R115	A-3A	R508	B-2C	C25	A-3F	C801	B-2A	CN1	A-3B		
IC403	A-3D	R14	B-2D	R116	A-3A	R512	A-2C	C26	B-3F	C802	B-1A	CN2	A-1B		
IC502	A-2C	R15	B-3D	R117	B-3B	R513	A-2C	C27	A-3F	C803	B-1A	CN3	A-2F		
IC503	A-2C	R16	B-3E	R118	B-3B	R514	A-2C	C28	A-3F	C804	B-2A	CN4	A-2A		
IC601	B-2C	R17	B-3E	R119	B-3B	R515	A-2C	C29	B-3D	C806	A-1C	CN5	A-2B		
IC602	A-3C	R18	B-1D	R120	B-3A	R516	A-2C	C30	B-1A	C807	B-1D	CN6	A-1D		
IC603	A-3C	R19	A-1E	R122	B-2A	R517	A-2C	C31	B-1D	C808	B-2D				
IC701	A-2D	R20	B-2F	R124	B-3B	R518	A-2C	C32	B-1E	C901	B-1B				
IC702	A-2E	R21	B-2E	R201	B-2B	R519	A-2C	C33	B-1D	C902	B-1B				
IC703	A-2E	R22	B-2E	R202	B-2B	R520	A-2C	C34	B-1C	C903	B-1B				
IC802	A-2D	R23	B-2E	R203	B-2B	R521	A-2C	C35	B-1D	C904	B-2B				
IC803	A-1D	R24	B-2E	R204	B-2B	R522	A-2C	C36	B-1B	C905	B-3E				
IC901	B-2D	R25	B-2F	R205	B-2B	R524	A-2C	C37	B-1A	C906	A-3D				
IC902	A-2E	R26	B-1E	R206	B-2B	R525	A-2C	C38	B-1B						
IC903	A-2E	R27	B-1E	R207	B-2B	R526	A-2C	C39	A-1A	K13	A-1B				
		R28	B-1E	R208	B-2B	R527	A-2C	C40	A-1E	K14	A-1B				
Q1	B-1D	R29	B-1F	R209	B-2B	R602	B-2C	C41	B-3F	K15	A-1C				
Q3	B-2A	R30	B-2E	R210	B-2A	R603	B-2C	C42	B-1C	K16	A-1B				
Q4	B-3F	R31	B-1D	R211	B-2A	R604	B-2C	C43	A-1C	K17	A-1B				
Q5	B-1C	R32	A-1D	R212	B-2A	R605	B-2C	C44	B-1C	K18	A-1B				
Q6	A-1B	R33	A-1D	R213	B-2A	R606	B-2C	C45	A-1B	K19	A-1D				
Q7	B-1C	R34	A-3E	R214	A-3A	R607	B-2C	C46	A-1B	K49	B-2F				
Q8	B-1C	R35	A-3E	R215	A-3A	R608	B-2C	C47	A-1A	K50	A-1D				
Q35	B-3A	R36	A-3E	R216	A-3A	R612	A-3C	C48	B-1B	K51	A-1E				
Q101	B-3B	R37	A-3E	R217	B-2B	R613	A-3C	C49	B-1C	K101	B-2F				
Q102	B-3B	R38	A-3E	R218	B-2B	R614	A-2C	C50	B-1D	K102	B-2F				
Q103	B-3A	R39	A-3E	R219	B-2A	R615	A-3C	C51	B-1C	K103	B-2F				
Q104	B-3B	R40	A-3E	R220	B-3A	R616	A-3C	C52	B-1C	K104	B-2F				
Q105	B-3B	R41	A-3E	R223	B-3B	R617	A-3C	C53	B-1D	K105	B-2F				
Q106	B-3B	R42	B-3F	R224	B-2B	R618	A-3C	C54	B-1E	K106	B-2F				
Q107	B-3B	R43	B-3F	R226	B-2A	R619	A-3C	C55	B-1E	K107	B-2F				
Q201	B-2B	R44	A-3E	R227	B-2A	R620	A-3C	C58	A-2D	K108	A-2F				
Q202	B-2B	R45	A-3E	R228	B-2A	R621	A-3C	C84	B-1A	K109	A-2F				
Q203	B-2A	R46	B-1E	R250	B-3A	R622	A-3C	C98	B-3A	K110	B-2F				
Q204	B-2B	R47	B-1E	R251	B-3A	R623	A-3C	C101	B-3B	K111	B-2F				
Q205	B-2B	R48	B-2D	R252	B-3A	R624	A-3C	C102	B-3B	K112	A-2F				
Q206	B-2B	R49	A-2D	R301	B-3D	R625	A-3C	C103	B-3B	K113	B-2F				
Q207	B-2B	R50	A-2C	R302	B-3D	R626	A-3C	C104	B-3B	K114	A-2F				
Q301	B-3D	R51	B-3D	R303	B-3D	R627	A-3C	C105	A-3A	K115	A-3A				
Q302	B-3D	R52	A-3E	R304	B-3D	R703	A-2D	C106	A-3A	K116	A-3A				
Q303	B-3C	R53	A-3E	R305	B-3C	R704	A-2D	C107	B-3B	K201	B-3A				
Q304	B-3C	R54	B-1D	R306	B-3D	R705	A-2D	C108	B-3B	K202	B-3A				
Q305	B-3D	R55	B-2F	R307	B-3D	R706	B-2F	C109	B-3B	K203	B-2A				
Q306	B-3D	R56	B-2F	R308	B-3D	R707	B-2F	C113	B-3A	K204	B-2A				
Q307	B-3C	R57	B-3F	R309	B-3C	R708	B-2F	C114	B-3A	K205	B-2A				
Q701	B-2F	R59	B-1C	R310	B-3C	R709	B-1F	C115	B-3B	K206	B-2A				
Q702	B-2F	R60	B-3F	R311	B-3C	R779	B-1C	C124	B-2A	K207	B-2A				
Q801	B-2A	R61	B-3F	R312	B-3C	R803	B-2C	C126	B-3A	K208	A-2A				
Q802	B-1A	R62	B-3F	R313	B-3C	R804	B-2C	C201	B-2B	K209	A-2A				
Q901	B-1B	R63	B-3F	R314	A-3B	R805	B-2C	C202	B-2B	K210	A-2A				
Q902	B-1B	R64	B-3F	R315	A-3B	R806	B-1A	C203	B-2B	K211	A-2A				
		R65	B-1C	R316	A-3B	R807	B-2A	C204	B-2B	K212	A-2A				
D2	B-3F	R66	B-1C	R317	B-3D	R808	B-2A	C205	A-3A	K213	A-2A				
D3	B-1B	R67	B-1C	R318	B-3D	R809	B-2A	C206	A-3B	K214	B-2A				
D6	B-3D	R68	B-1C	R319	B-3C	R903	B-2D	C207	B-2B	K215	A-3A				
D7	B-2D	R69	B-1B	R320	B-3C	R904	B-2D	C208	B-2A	K216	A-3B				

4-23

4.13 ISB/ISG/ISR BOARD SCHEMATIC DIAGRAM 02/03/04

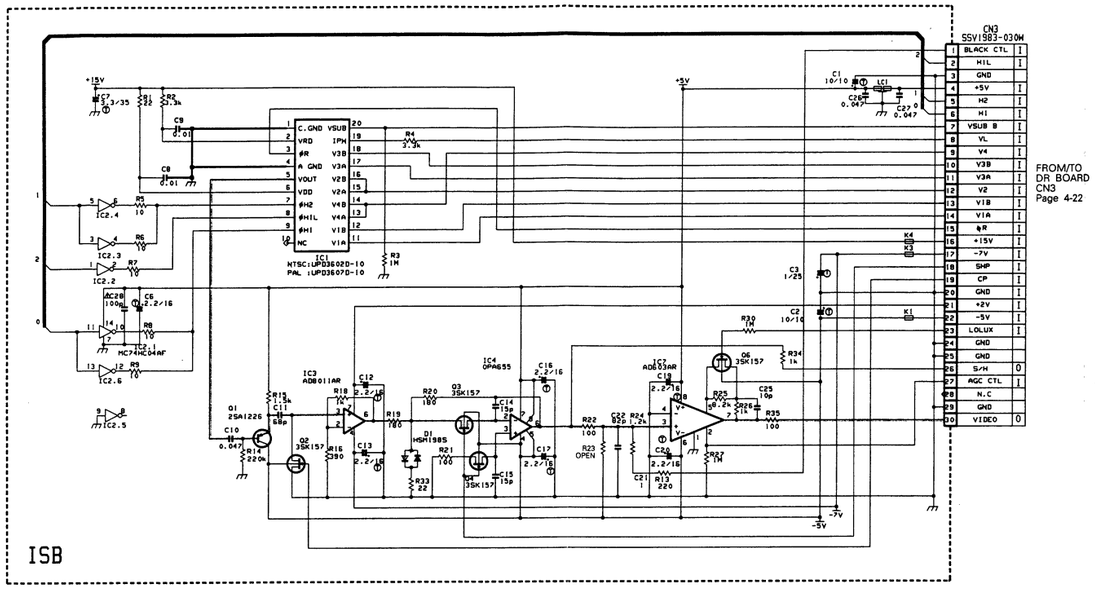

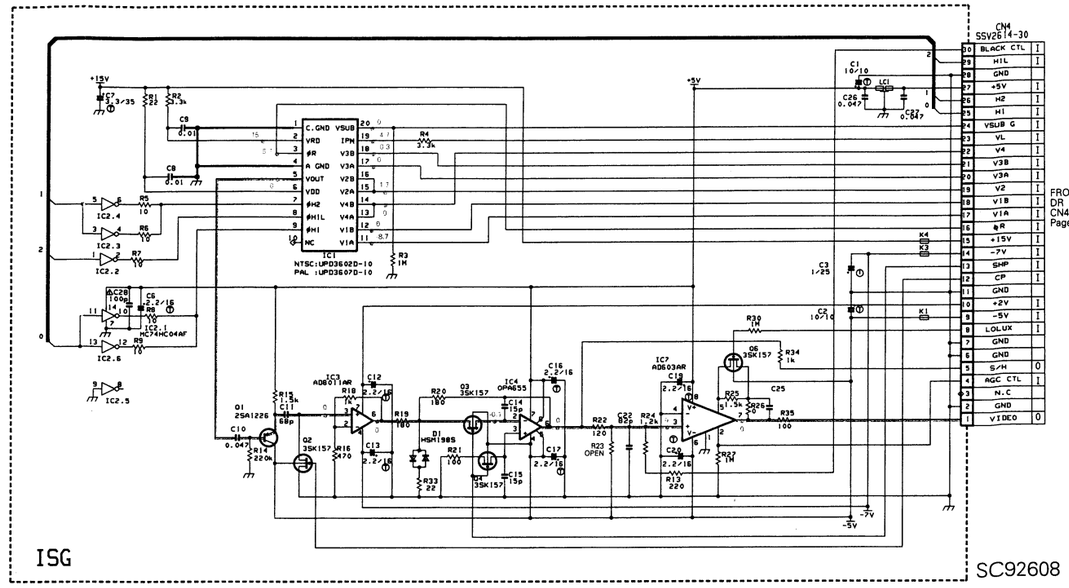

SC92608

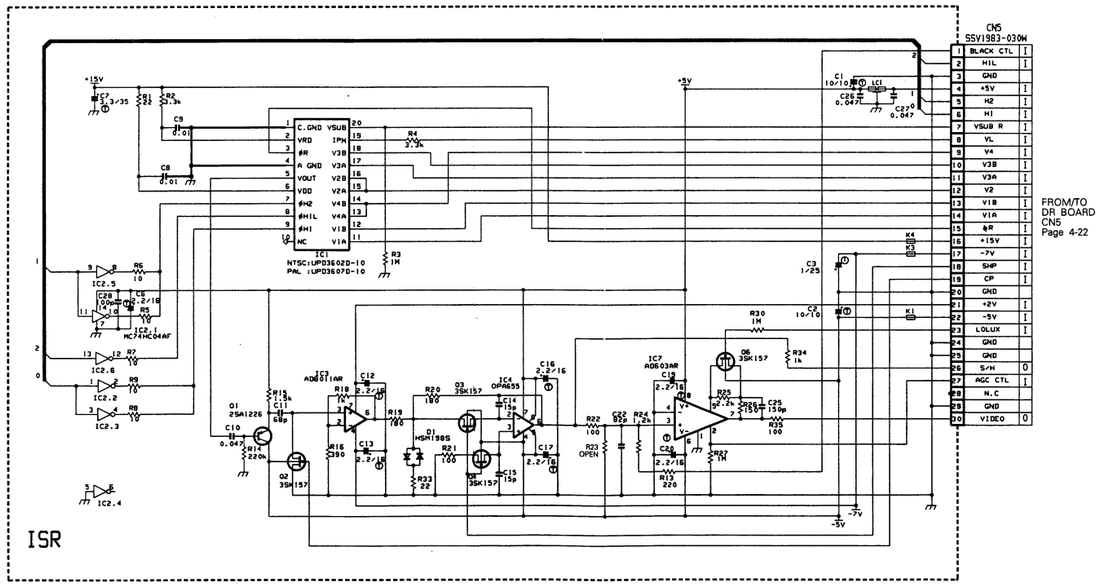

4.14 ISB/ISG/ISR CIRCUIT BOARDS

●ISB

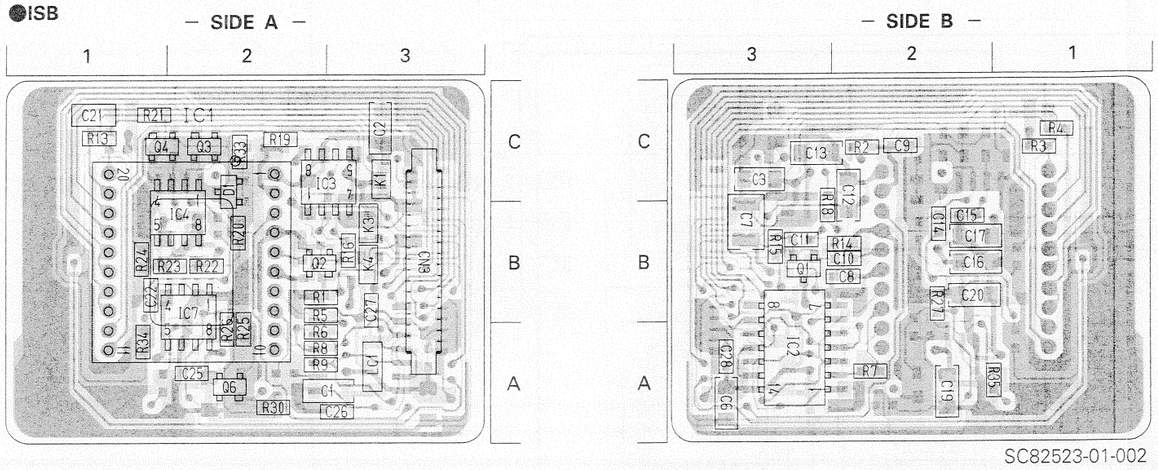

SC82523-01-002

● ADDRESS TABEL OF BOARD PARTS
Each address may have an address error by one interval.

Side — A-1C (Y axis / X axis)

IC1	A-2B	R6	A-2A	R33	A-2C	C19	B-2A
IC2	B-3A	R7	B-2A	R34	A-1A	C20	B-2B
IC3	A-2C	R8	A-2A	R35	B-1A	C21	A-1C
IC4	A-2B	R9	A-2A			C22	A-1B
IC7	A-2B	R13	A-1C	C1	A-2A	C25	A-2A
		R14	B-2B	C2	A-3C	C26	A-3A
Q1	B-3B	R15	B-3B	C3	B-3C	C27	A-3B
Q2	A-2B	R16	A-3B	C6	B-3A	C28	B-3A
Q3	A-2C	R18	B-2B	C7	B-3B		
Q4	A-1C	R19	A-2C	C8	B-2B	CN3	A-3B
Q6	A-2A	R20	A-2B	C9	B-2C		
		R21	A-1C	C10	B-2B	LC1	A-3A
D1	A-2C	R22	A-2B	C11	B-3B		
		R23	A-2B	C12	B-3C	K1	A-3C
R1	A-2B	R24	A-1B	C13	B-2B	K3	A-3B
R2	B-2C	R25	A-2A	C14	B-2B	K4	A-3B
R3	B-1C	R26	A-2A	C15	B-2B		
R4	B-1C	R27	B-2B	C16	B-2B		
R5	A-2B	R30	A-2A	C17	B-2B		

●ISG

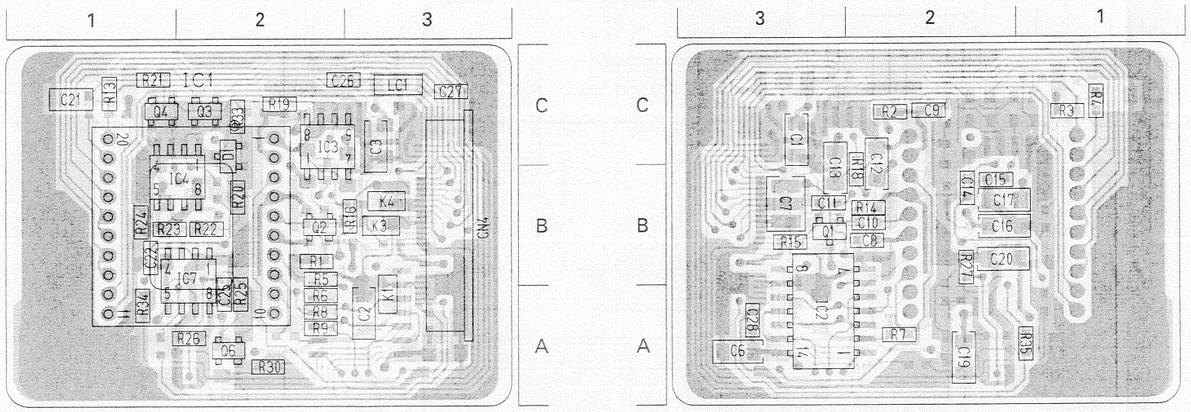

SC82523-02-002

● ADDRESS TABEL OF BOARD PARTS
Each address may have an address error by one interval.

Side — A-1C (Y axis / X axis)

IC1	A-2B	R6	A-2A	R33	A-2C	C19	B-2A
IC2	B-3A	R7	B-2A	R34	A-1A	C20	B-2B
IC3	A-2C	R8	A-2A	R35	B-1A	C21	A-1C
IC4	A-2B	R9	A-2A			C22	A-1B
IC7	A-2B	R13	A-1C	C1	B-3C	C25	A-2A
		R14	B-2B	C2	A-3A	C26	A-2C
Q1	B-2B	R15	B-3B	C3	A-3C	C27	A-3C
Q2	A-2B	R16	A-2B	C6	B-3A	C28	B-3A
Q3	A-2C	R18	B-2B	C7	B-3B		
Q4	A-1C	R19	A-2C	C8	B-2B	CN4	A-3B
Q6	A-2A	R20	A-2B	C9	B-2C		
		R21	A-1C	C10	B-2B	LC1	A-3C
D1	A-2C	R22	A-2B	C11	B-3B		
		R23	A-1B	C12	B-2C	K1	A-3A
R1	A-2B	R24	A-1B	C13	B-2B	K3	A-3B
R2	B-2C	R25	A-2A	C14	B-2B	K4	A-3B
R3	B-1C	R26	A-2A	C15	B-2B		
R4	B-1C	R27	B-2B	C16	B-2B		
R5	A-2B	R30	A-2A	C17	B-2B		

●ISR

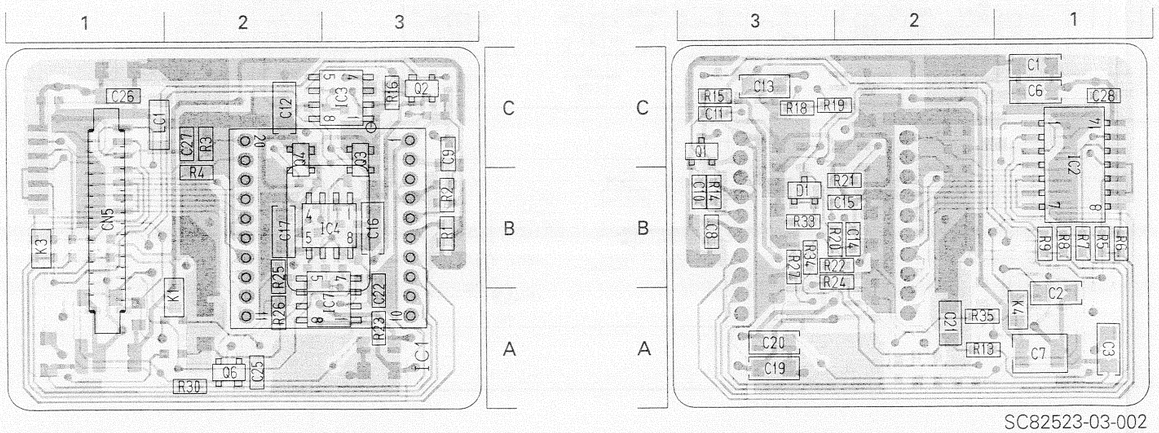

SC82523-03-002

● ADDRESS TABEL OF BOARD PARTS
Each address may have an address error by one interval.

Side — A-1C (Y axis / X axis)

IC1	A-2B	R6	B-1B	R33	B-3B	C19	B-3A
IC2	B-1C	R7	B-1B	R34	B-3B	C20	B-3A
IC3	A-3C	R8	B-1B	R35	B-2A	C21	B-2A
IC4	A-3B	R9	B-1B			C22	A-3A
IC7	A-2A	R13	B-2A	C1	B-1C	C25	A-2A
		R14	B-3B	C2	B-1A	C26	A-1C
Q1	B-3C	R15	B-3C	C3	B-1A	C27	A-2C
Q2	A-3C	R16	A-3C	C6	B-1C	C28	B-1C
Q3	A-3C	R18	B-3C	C7	B-1A		
Q4	A-2C	R19	B-2C	C8	B-3B	CN5	A-1B
Q6	A-2A	R20	B-2B	C9	A-3C		
		R21	B-2B	C10	B-3B	LC1	A-1C
D1	B-3B	R22	B-2B	C11	B-3C		
		R23	A-3A	C12	A-2C	K1	A-2A
R1	A-3B	R24	B-2B	C13	B-3C	K3	A-1B
R2	A-3B	R25	A-2B	C14	B-2B	K4	B-1A
R3	A-2C	R26	A-2A	C15	B-2B		
R4	A-2B	R27	B-3B	C16	A-3B		
R5	B-1B	R30	A-2A	C17	A-2B		

4-25

4.15N CP BOARD SCHEMATIC DIAGRAM 05 (ONLY FOR DY-90U)

✳ : Not mounted.

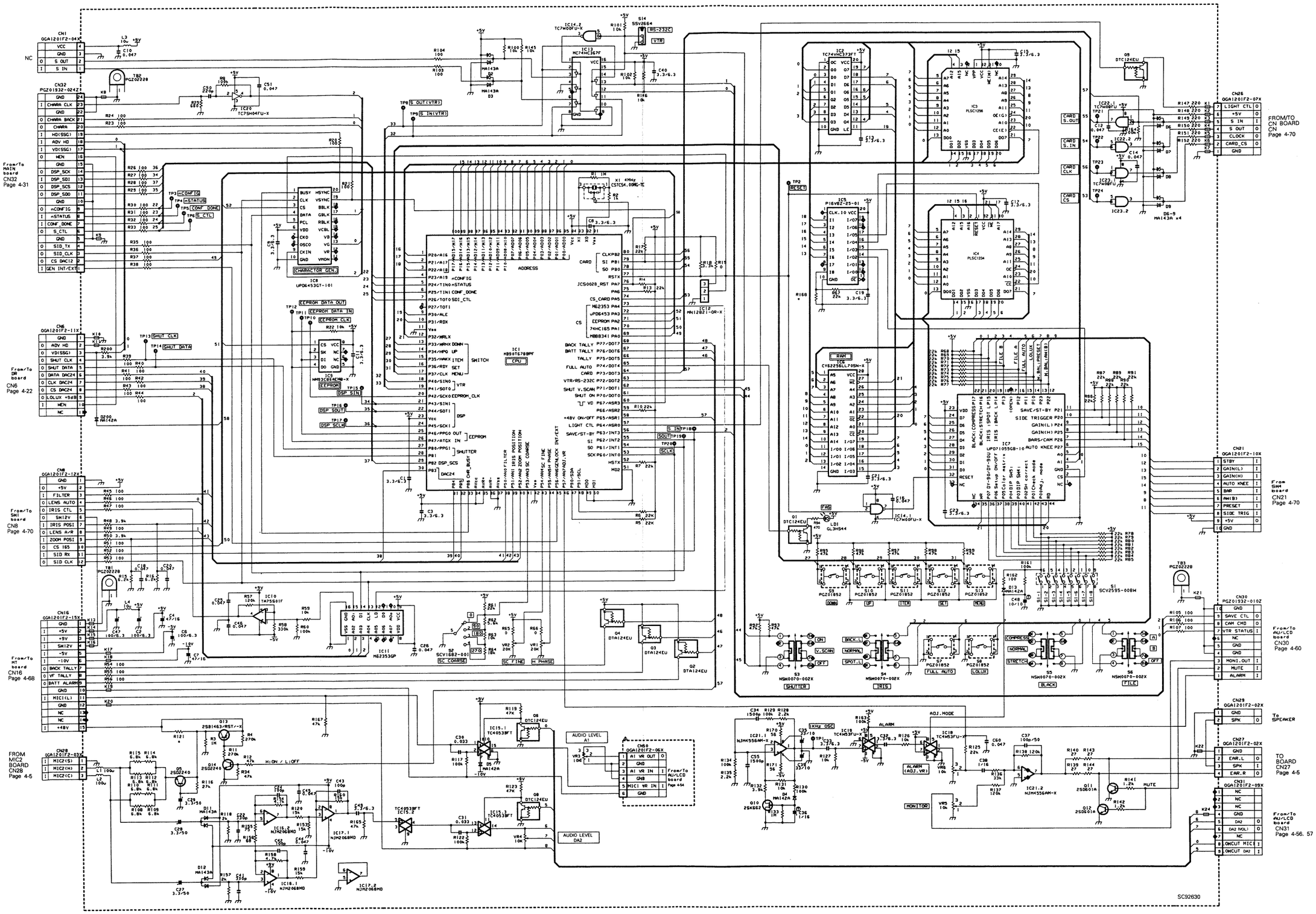

4.16N CP CIRCUIT BOARD (ONLY FOR DY-90U)

– SIDE A –

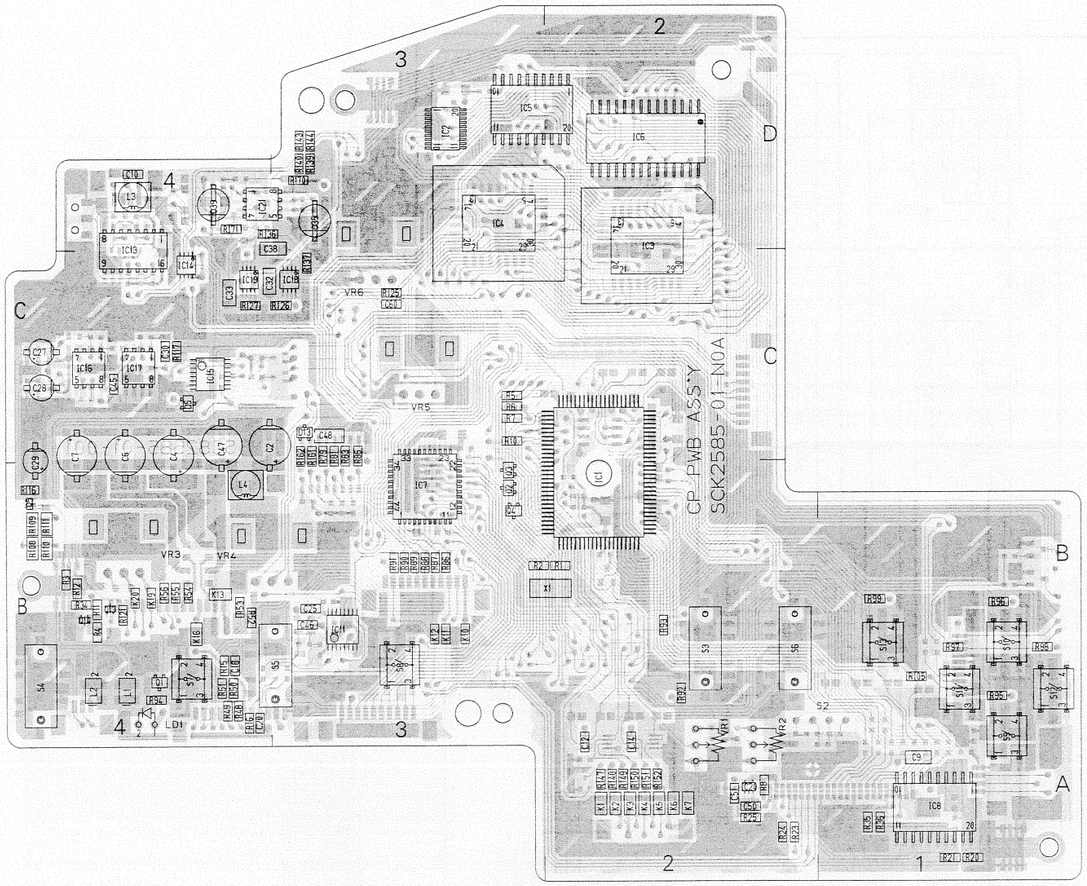

– SIDE B –

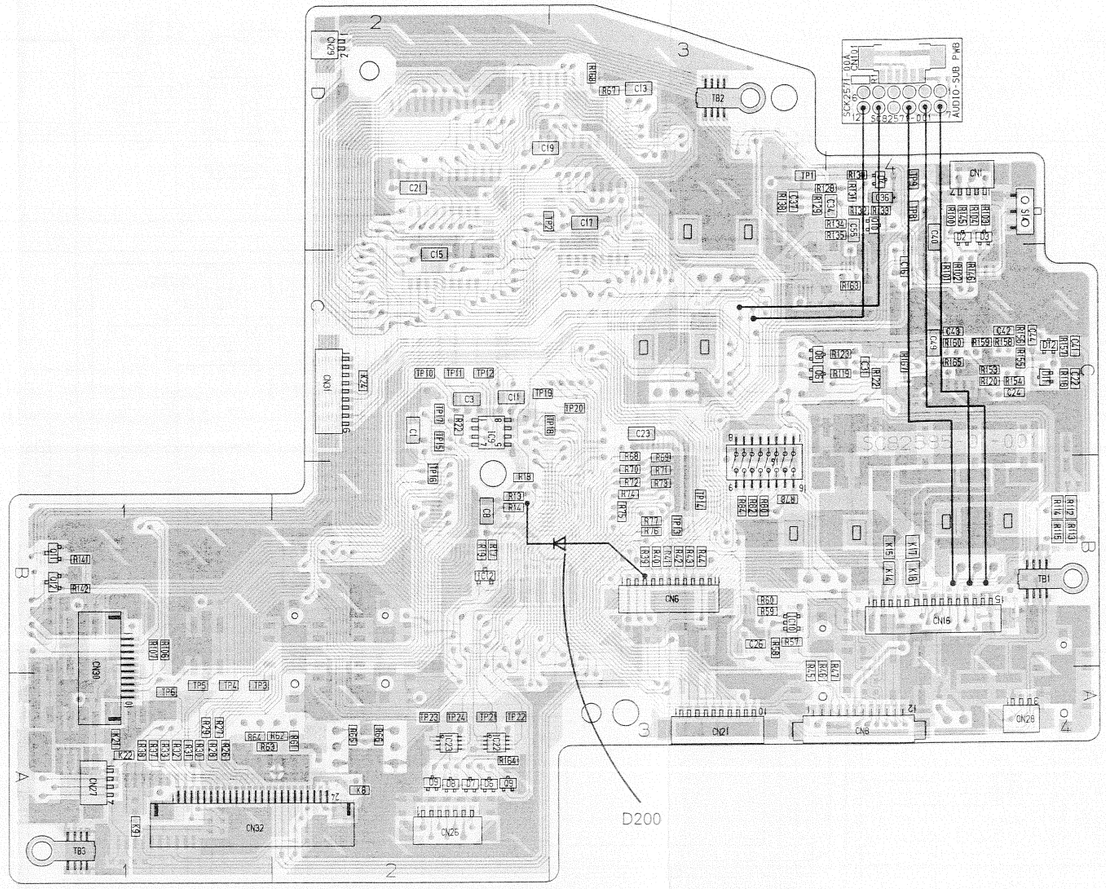

ADDRESS TABEL OF BOARD PARTS

Each address may have an address error by one interval.

Side A-1C — Y axis / X axis

IC1	A-2B	Q1	A-4A	D12	B-4C	R22	B-2C	R45	B-3A	R68	B-3B	R91	A-3B	R114	B-4B	R138	B-3D	R161	A-3B	C8	B-2B	C31	B-4C	L1	A-4A	TP20	B-3C	K5	A-2A	S1	B-3B
IC2	A-3D	Q2	A-3B	D13	A-3C	R23	A-2A	R46	B-3A	R69	B-3B	R92	A-2A	R115	B-4B	R139	A-3D	R162	A-3B	C9	A-1A	C32	A-4C	L2	A-4A	TP21	B-2A	K6	A-2A	S2	A-2A
IC3	A-2C	Q3	A-3B			R24	A-2A	R47	B-4A	R70	B-3B	R93	A-2B	R116	A-4B	R140	A-3D	R163	B-4C	C10	A-4D	C33	A-4C	L3	A-4D	TP22	B-2A	K7	A-2A	S3	A-2B
IC4	A-3C	Q4	A-3B	R1	A-2B	R25	A-2A	R48	A-4A	R71	B-3B	R94	A-4A	R117	A-4C	R141	B-1B	R164	B-2A	C11	B-2C	C34	B-4D	L4	A-4B	TP23	B-2A	K8	B-2A	S4	A-4A
IC5	A-2D	Q5	A-4B	R2	A-3B	R26	B-1A	R49	A-4A	R72	B-3B	R95	A-1A	R118	B-4C	R142	B-1B	R165	B-4C	C12	A-2A	C35	A-3D			TP24	B-2A	K9	B-1A	S5	A-3A
IC6	A-2D	Q6	B-3C	R3	A-4B	R27	B-1A	R50	A-4A	R73	B-3B	R96	A-1B	R119	B-4C	R143	A-3D	R167	B-4C	C13	B-3D	C36	B-4D	TP1	B-3D			K10	A-3B	S6	A-2B
IC7	A-3B	Q8	B-3C	R4	A-4B	R28	B-1A	R51	A-4A	R74	B-3B	R97	A-1B	R120	B-4C	R144	A-3D	R168	B-3D	C14	A-2A	C37	B-3D	TP2	B-2C	CN1	B-4D	K11	A-3B	S7	A-4A
IC8	A-1A	Q9	B-2A	R5	A-3C	R29	B-1A	R52	A-4B	R75	B-3B	R98	A-1B	R121	A-4B	R145	B-4D	R170	A-3D	C15	B-2C	C38	A-4C	TP3	B-1A	CN6	B-3B	K12	A-3B	S8	A-3A
IC9	B-2C	Q10	B-4C	R6	A-3C	R30	B-1A	R53	A-4B	R76	B-3B	R99	A-1B	R122	B-4C	R146	B-4C	R171	A-4C	C16	B-4C	C39	A-4D	TP4	B-1A	CN8	B-4A	K13	A-4B	S9	A-1A
IC10	B-3B	Q11	B-1B	R7	A-3C	R31	B-1A	R54	A-4B	R77	B-3B	R100	B-4D	R123	B-4C	R147	A-2A			C17	B-3C	C40	B-4C	TP5	B-1A	CN16	B-4B	K14	B-4B	S10	A-1B
IC11	A-3B	Q12	B-1B	R8	A-2A	R32	B-1A	R55	A-4B	R78	B-3B	R101	B-4C	R125	A-3C	R148	A-2A	VR1	A-2A	C18	A-4A	C41	B-4C	TP6	B-1A	CN21	B-3A	K15	B-4B	S11	A-1A
IC12	B-2B	Q13	A-4B	R10	A-3C	R33	B-1A	R56	A-4B	R79	A-3B	R102	B-4C	R126	A-3C	R149	A-2A	VR2	A-2A	C19	B-2D	C42	B-4C	TP8	B-4D	CN26	B-2A	K16	A-4B	S12	A-1A
IC13	A-4C	Q14	A-4B	R11	A-4B	R34	A-4B	R57	B-3B	R80	B-3B	R103	B-4D	R127	A-4C	R150	A-2A	VR3	A-4B	C20	A-4A	C43	B-4C	TP9	B-4D	CN27	B-1A	K17	B-4B	S13	A-1B
IC14	A-4C			R12	A-4B	R35	A-1A	R58	B-3B	R81	A-3B	R104	B-4D	R128	B-4D	R151	A-2A	VR4	A-4B	C21	B-2D	C44	B-4C	TP10	B-2C	CN28	B-4A	K18	B-4B	S14	B-4D
IC15	A-4C	D2	B-4C	R13	B-2B	R36	A-1A	R59	B-3B	R82	B-3B	R105	A-1A	R129	B-3D	R152	A-2A	VR5	A-3C	C22	B-4C	C45	A-4C	TP11	B-2C	CN29	B-2D	K19	A-4B		
IC16	A-4C	D3	B-4C	R14	B-2B	R37	B-1A	R60	B-3B	R83	A-3B	R106	B-1B	R130	B-4D	R153	B-4C	VR6	A-3C	C23	B-3C	C46	A-3B	TP12	B-2C	CN30	B-1A	K20	A-4B	X1	A-2B
IC17	A-4C	D4	B-4D	R15	A-4A	R38	B-1A	R61	B-2A	R84	B-3B	R107	B-1B	R131	B-4D	R154	B-4C			C24	B-4C	C47	A-4B	TP13	B-3B	CN31	B-2C	K21	B-1A		
IC18	A-3C	D5	A-4C	R16	A-4A	R39	B-3B	R62	B-2A	R85	A-3B	R108	A-4B	R132	B-4D	R155	B-4C	C1	B-2C	C25	A-3B	C48	A-3C	TP14	B-3B	CN32	B-1A	K22	B-1A	LD1	A-4A
IC19	A-4C	D6	B-2A	R17	B-2B	R40	B-3B	R63	B-1A	R86	A-3B	R109	A-4B	R133	B-4D	R156	B-4C	C2	A-4B	C26	B-3B	C49	B-4C	TP15	B-2C			K24	B-2C		
IC20	A-2A	D7	B-2A	R18	B-2B	R41	B-3B	R64	B-1A	R87	A-3B	R110	A-4B	R134	B-4C	R157	B-4C	C3	B-2C	C27	A-4C	C50	A-2A	TP16	B-2B	K1	A-2A				
IC21	A-4D	D8	B-2A	R19	B-2B	R42	B-3B	R65	B-2A	R88	A-3B	R111	A-4B	R135	B-4C	R158	B-4C	C4	A-4B	C28	A-4C	C51	A-2A	TP17	B-2C	K2	A-2A	TB1	B-4B		
IC22	B-2A	D9	B-2A	R20	A-1A	R43	B-3B	R66	B-2A	R89	A-3B	R112	B-4B	R136	A-4C	R159	B-4C	C6	A-4B	C29	A-4B	C55	B-4C	TP18	B-3C	K3	A-2A	TB2	B-3D		
IC23	B-2A	D11	B-4C	R21	A-1A	R44	B-3B	R67	B-3D	R90	A-3B	R113	B-4B	R137	A-3C	R160	B-4C	C7	A-4B	C30	A-4C	C60	A-3C	TP19	B-2C	K4	A-2A	TB3	B-1A		

4-27

4.15P CP BOARD SCHEMATIC DIAGRAM 05 (FOR JAPANESE MODEL/PAL MODEL)

✳ : Not mounted.

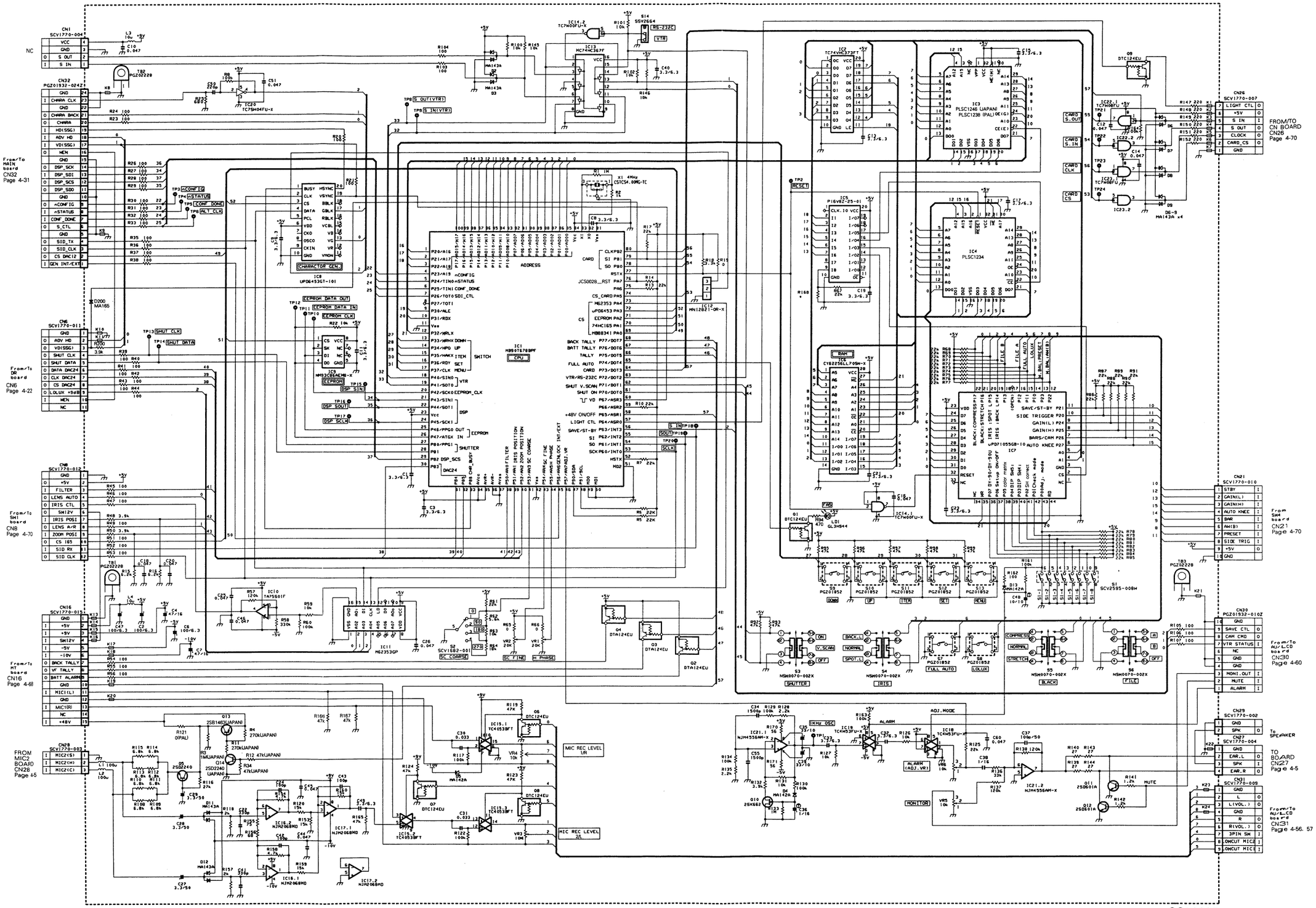

4.16P CP CIRCUIT BOARD (FOR JAPANESE MODEL/PAL MODEL)

– SIDE A –

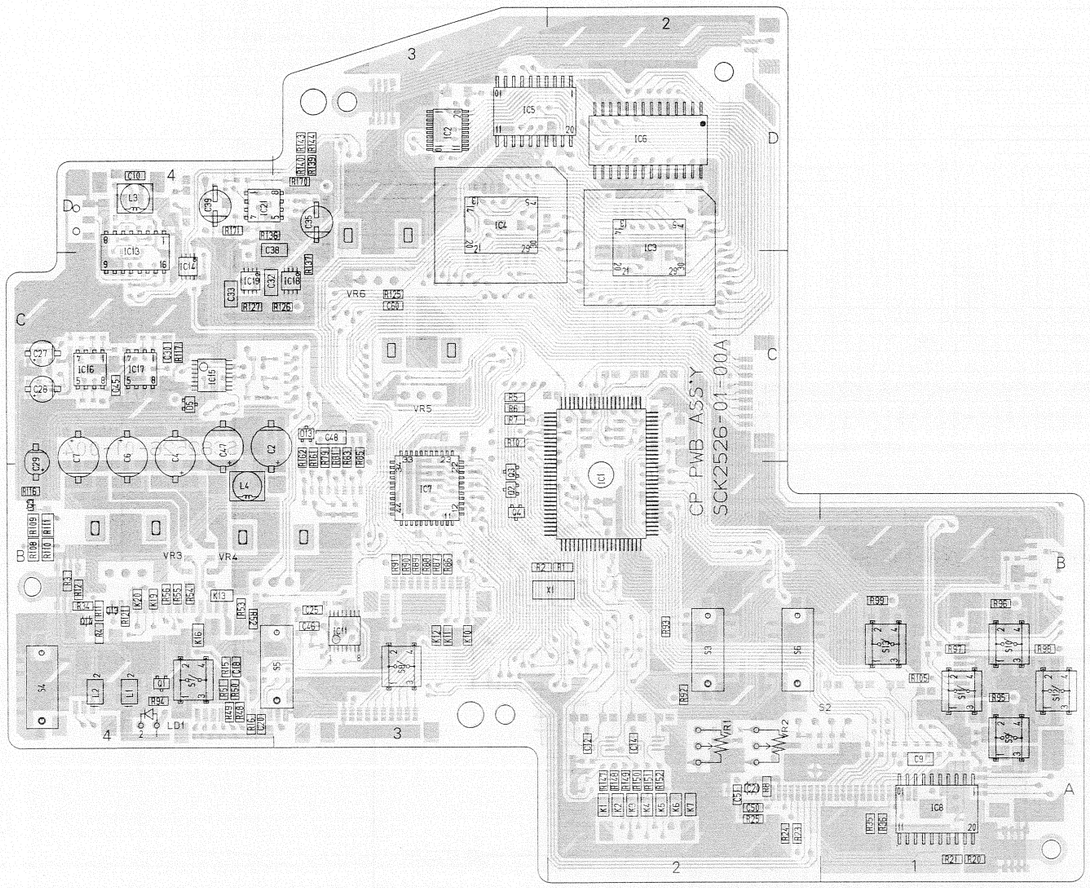

– SIDE B –

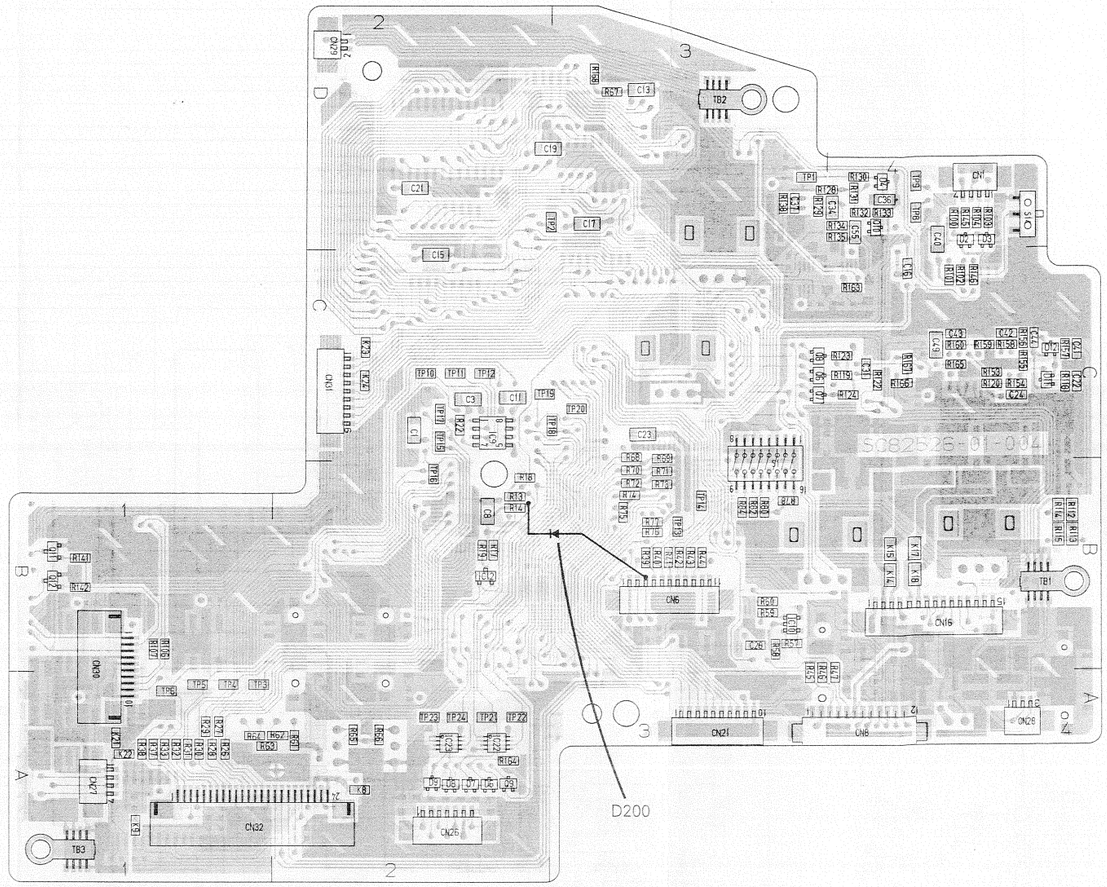

ADDRESS TABEL OF BOARD PARTS

Each address may have an address error by one interval.

Side A-1C (Y axis / X axis)

IC1	A-2B	Q1	A-4A	D11	B-4C	R21	A-1A	R44	B-3B	R67	B-3D	R90	A-3B	R113	B-4B	R136	A-4C	R159	B-4C	C4	A-4B	C28	A-4C	C51	A-2A	TP16	B-2B	K1	A-2A	K24	B-2C	LD1	A-4A
IC2	A-3D	Q2	A-3B	D12	B-4C	R22	B-2C	R45	B-4A	R68	B-3B	R91	A-3B	R114	B-4B	R137	A-3C	R160	B-4C	C6	A-4B	C29	A-4B	C55	B-4C	TP17	B-2C	K2	A-2A				
IC3	A-2C	Q3	A-3B	D13	A-3C	R23	A-2A	R46	B-4A	R69	B-3B	R92	A-2A	R115	B-4B	R138	B-3D	R161	A-3B	C7	A-4B	C30	A-4C	C60	A-3C	TP18	B-3C	K3	A-2A	TB1	B-4B		
IC4	A-3C	Q4	A-3B			R24	A-2A	R47	B-4A	R70	B-3B	R93	A-2B	R116	A-4B	R139	A-3D	R162	A-3B	C8	B-2B	C31	B-4C			TP19	B-3C	K4	A-2A	TB2	B-3D		
IC5	A-3D	Q5	A-4B	R1	A-3B	R25	A-2A	R48	A-4A	R71	B-3B	R94	A-4A	R117	A-4C	R140	A-3D	R163	B-4C	C9	A-1A	C32	A-4C	L1	A-4A	TP20	B-3C	K5	A-2A	TB3	B-1A		
IC6	A-2D	Q6	B-4C	R2	A-3B	R26	B-1A	R49	A-4A	R72	B-3B	R95	A-1A	R118	B-4C	R141	B-1B	R164	B-2A	C10	A-4D	C33	A-4C	L2	A-4A	TP21	B-2A	K6	A-2A				
IC7	A-3B	Q7	B-4C	R3	A-4B	R27	B-1A	R50	A-4A	R73	B-3B	R96	A-1B	R119	B-4C	R142	B-1B	R165	B-4C	C11	B-2C	C34	B-4D	L3	A-4D	TP22	B-2A	K7	A-2A	S1	B-3B		
IC8	A-1A	Q8	B-4C	R4	A-4B	R28	B-1A	R51	A-4A	R74	B-3B	R97	A-1B	R120	B-4C	R143	A-3D	R166	B-4C	C12	A-2A	C35	A-3D	L4	A-4B	TP23	B-2A	K8	B-2A	S2	A-2A		
IC9	B-2C	Q9	B-2A	R5	A-3C	R29	B-1A	R52	A-4B	R75	B-3B	R98	A-1B	R121	A-4B	R144	A-3D	R167	B-4C	C13	B-3D	C36	B-4D			TP24	B-2A	K9	B-1A	S3	A-2B		
IC10	B-3B	Q10	B-4C	R6	A-3C	R30	B-1A	R53	A-4B	R76	B-3B	R99	A-1B	R122	B-4C	R145	B-4D	R168	B-3D	C14	A-2A	C37	B-3D	TP1	B-4D			K10	A-3B	S4	A-4A		
IC11	A-3B	Q11	B-1B	R7	A-3C	R31	B-1A	R54	A-4B	R77	B-3B	R100	B-4D	R123	B-4C	R146	B-4C	R170	A-3D	C15	B-2C	C38	A-4C	TP2	B-3C	CN1	B-4D	K11	A-3B	S5	A-4A		
IC12	B-2B	Q12	B-1B	R8	A-2A	R32	B-1A	R55	A-4B	R78	B-3B	R101	B-4C	R124	B-4C	R147	A-2A	R171	A-4C	C16	B-4C	C39	A-4D	TP3	B-2A	CN6	B-3B	K12	A-3B	S6	A-2B		
IC13	A-4C	Q13	A-4B	R10	A-3C	R33	B-1A	R56	A-4B	R79	A-3B	R102	B-4C	R125	A-3C	R148	A-2A			C17	B-3C	C40	B-4C	TP4	B-1A	CN8	B-4A	K13	A-4B	S7	A-4A		
IC14	A-4C	Q14	A-4B	R11	A-4B	R34	A-4B	R57	B-3B	R80	B-3B	R103	B-4D	R126	A-4C	R149	A-2A	VR1	A-2A	C18	A-4A	C41	B-4C	TP5	B-1A	CN16	B-4B	K14	B-4B	S8	A-3A		
IC15	A-4C			R12	A-4B	R35	A-1A	R58	B-3B	R81	A-3B	R104	B-4D	R127	A-4C	R150	A-2A	VR2	A-2A	C19	B-3D	C42	B-4C	TP6	B-1A	CN21	B-3A	K15	B-4B	S9	A-1A		
IC16	A-4C	D2	B-4C	R13	B-2B	R36	A-1A	R59	B-3B	R82	B-3B	R105	A-1A	R128	B-4D	R151	A-2A	VR3	A-4B	C20	A-4A	C43	B-4C	TP8	B-4D	CN26	B-2A	K16	A-4B	S10	A-1B		
IC17	A-4C	D3	B-4C	R14	B-2B	R37	B-1A	R60	B-3B	R83	A-3B	R106	B-1B	R129	B-4D	R152	A-2A	VR4	A-4B	C21	B-2D	C44	B-4C	TP9	B-4D	CN27	B-1A	K17	B-4B	S11	A-1A		
IC18	A-3C	D4	B-4D	R15	A-4A	R38	B-1A	R61	B-2A	R84	B-3B	R107	B-1B	R130	B-4D	R153	B-4C	VR5	A-3C	C22	B-4C	C45	A-4C	TP10	B-2C	CN28	B-4A	K18	B-4B	S12	A-1A		
IC19	A-4C	D5	A-4C	R16	A-4A	R39	B-3B	R62	B-2A	R85	A-3B	R108	A-4B	R131	B-4D	R154	B-4C	VR6	A-3C	C23	B-3C	C46	A-3B	TP11	B-2C	CN29	B-2D	K19	A-4B	S13	A-1B		
IC20	A-2A	D6	B-2A	R17	B-2B	R40	B-3B	R63	B-2A	R86	A-3B	R109	A-4B	R132	B-4D	R155	B-4C			C24	B-4C	C47	A-4B	TP12	B-2C	CN30	B-1A	K20	A-4B	S14	B-4D		
IC21	A-4D	D7	B-2A	R18	B-3B	R41	B-3B	R64	B-2A	R87	A-3B	R110	A-4B	R133	B-4D	R156	B-4C	C1	B-2C	C25	A-3B	C48	A-3C	TP13	B-3B	CN31	B-2C	K21	B-1A				
IC22	B-2A	D8	B-2A	R19	B-2B	R42	B-3B	R65	B-2A	R88	A-3B	R111	A-4B	R134	B-4C	R157	B-4C	C2	A-4B	C26	B-3B	C49	B-4C	TP14	B-3B	CN32	B-2A	K22	B-1A	X1	A-3B		
IC23	B-2A	D9	B-2A	R20	A-1A	R43	B-3B	R66	B-2A	R89	A-3B	R112	B-4B	R135	B-4C	R158	B-4C	C3	B-2C	C27	A-4C	C50	A-2A	TP15	B-2C			K23	B-2C				

4-29

4.17 MAIN BOARD SCHEMATIC DIAGRAM 0 6

– MAIN BOARD SCHEMATIC DIAGRAM 1/10 –

1/10	Page 4-30
2/10	Page 4-31
3/10	Page 4-32
4/10	Page 4-33
5/10	Page 4-34
6/10	Page 4-35
7/10	Page 4-36
8/10	Page 4-37
9/10	Page 4-38
10/10	Page 4-39

0.9Vp-p
H-rate

SC92615

— MAIN BOARD SCHEMATIC DIAGRAM 2/10 —

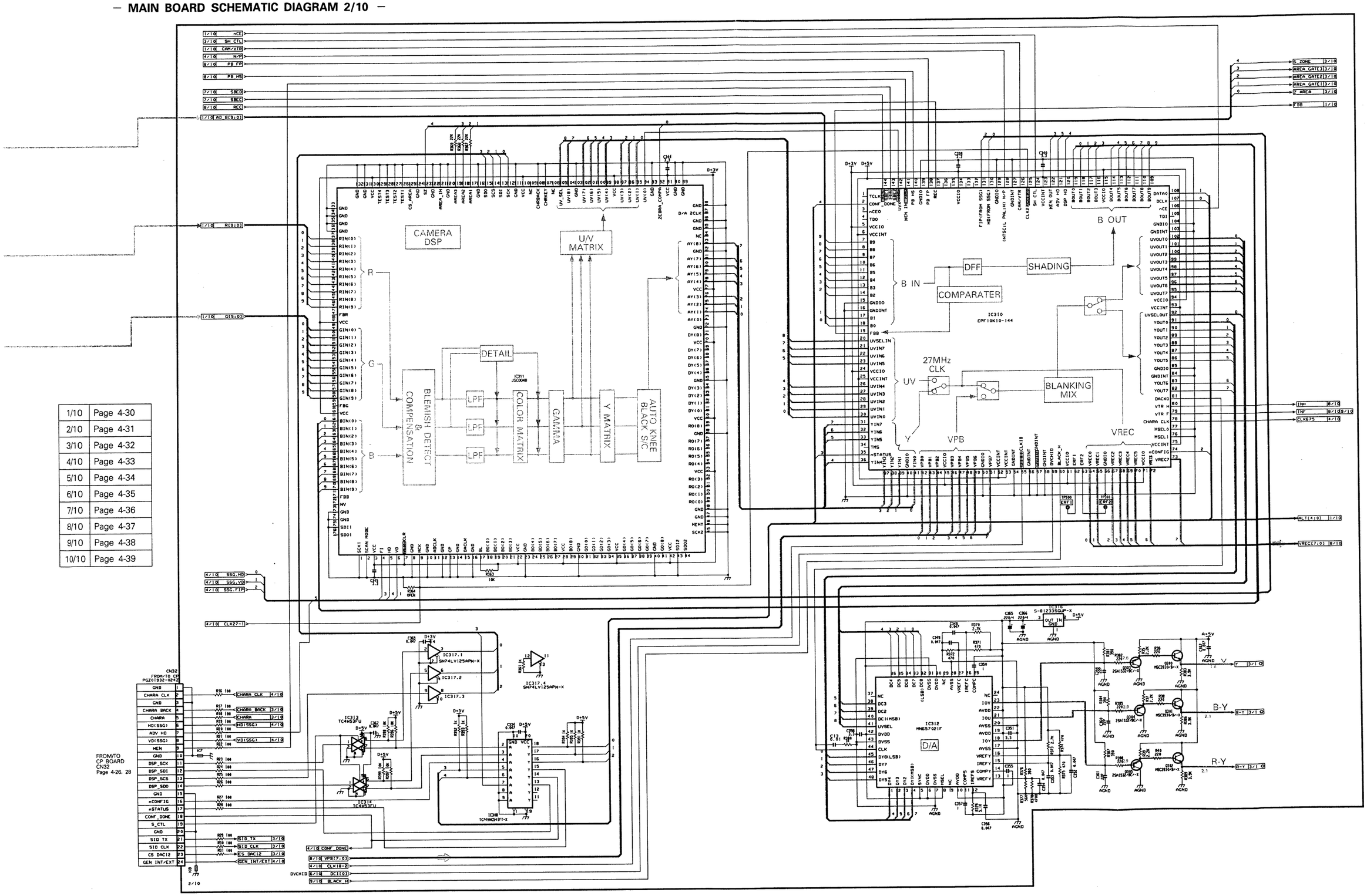

1/10	Page 4-30
2/10	Page 4-31
3/10	Page 4-32
4/10	Page 4-33
5/10	Page 4-34
6/10	Page 4-35
7/10	Page 4-36
8/10	Page 4-37
9/10	Page 4-38
10/10	Page 4-39

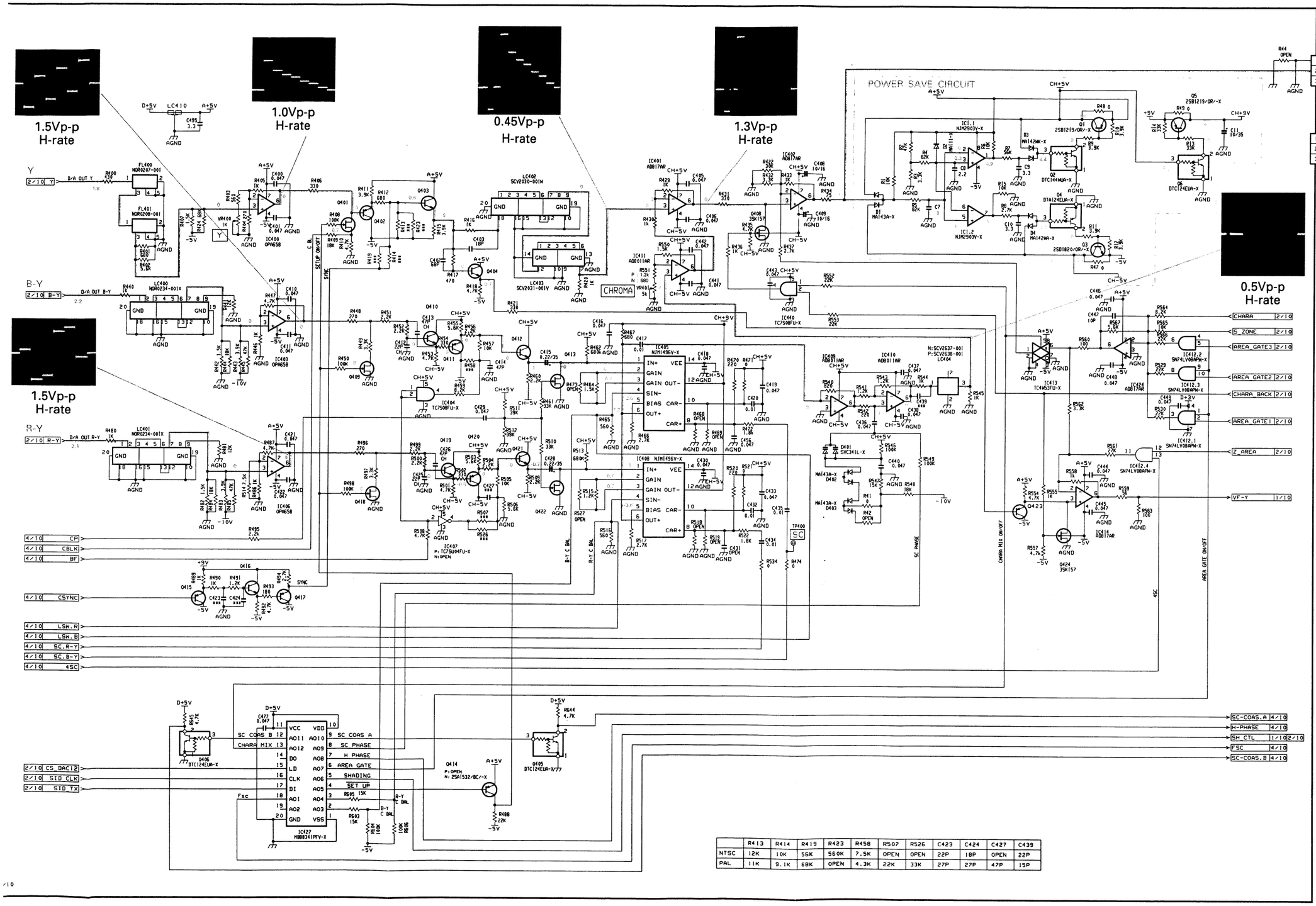

	R413	R414	R419	R423	R458	R507	R526	C423	C424	C427	C439
NTSC	12K	10K	56K	560K	7.5K	OPEN	OPEN	22P	18P	OPEN	22P
PAL	11K	9.1K	68K	OPEN	4.3K	22K	33K	27P	27P	47P	15P

1/10	Page 4-30
2/10	Page 4-31
3/10	Page 4-32
4/10	Page 4-33
5/10	Page 4-34
6/10	Page 4-35
7/10	Page 4-36
8/10	Page 4-37
9/10	Page 4-38
10/10	Page 4-39

– MAIN BOARD SCHEMATIC DIAGRAM 4/10 –

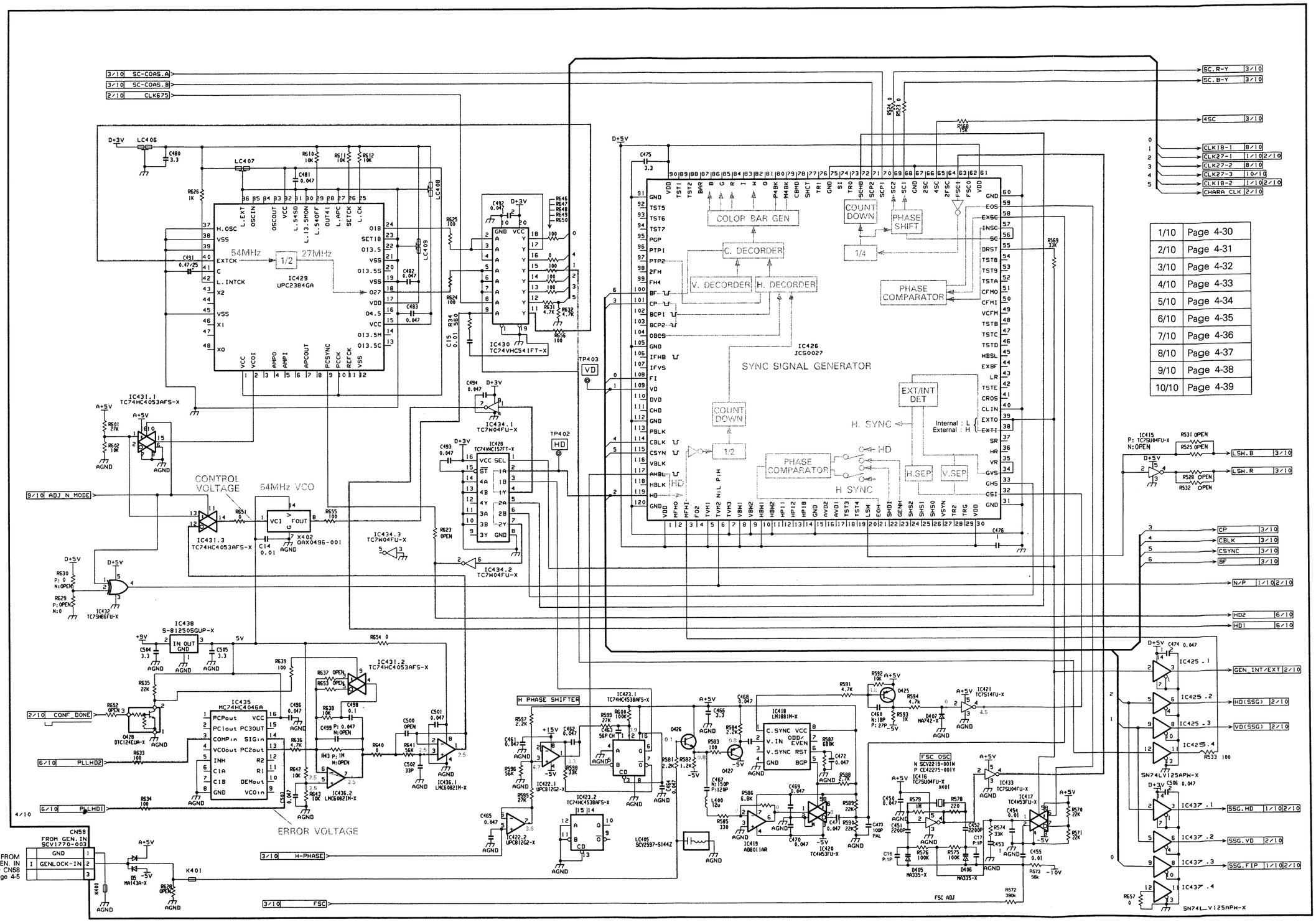

1/10	Page 4-30
2/10	Page 4-31
3/10	Page 4-32
4/10	Page 4-33
5/10	Page 4-34
6/10	Page 4-35
7/10	Page 4-36
8/10	Page 4-37
9/10	Page 4-38
10/10	Page 4-39

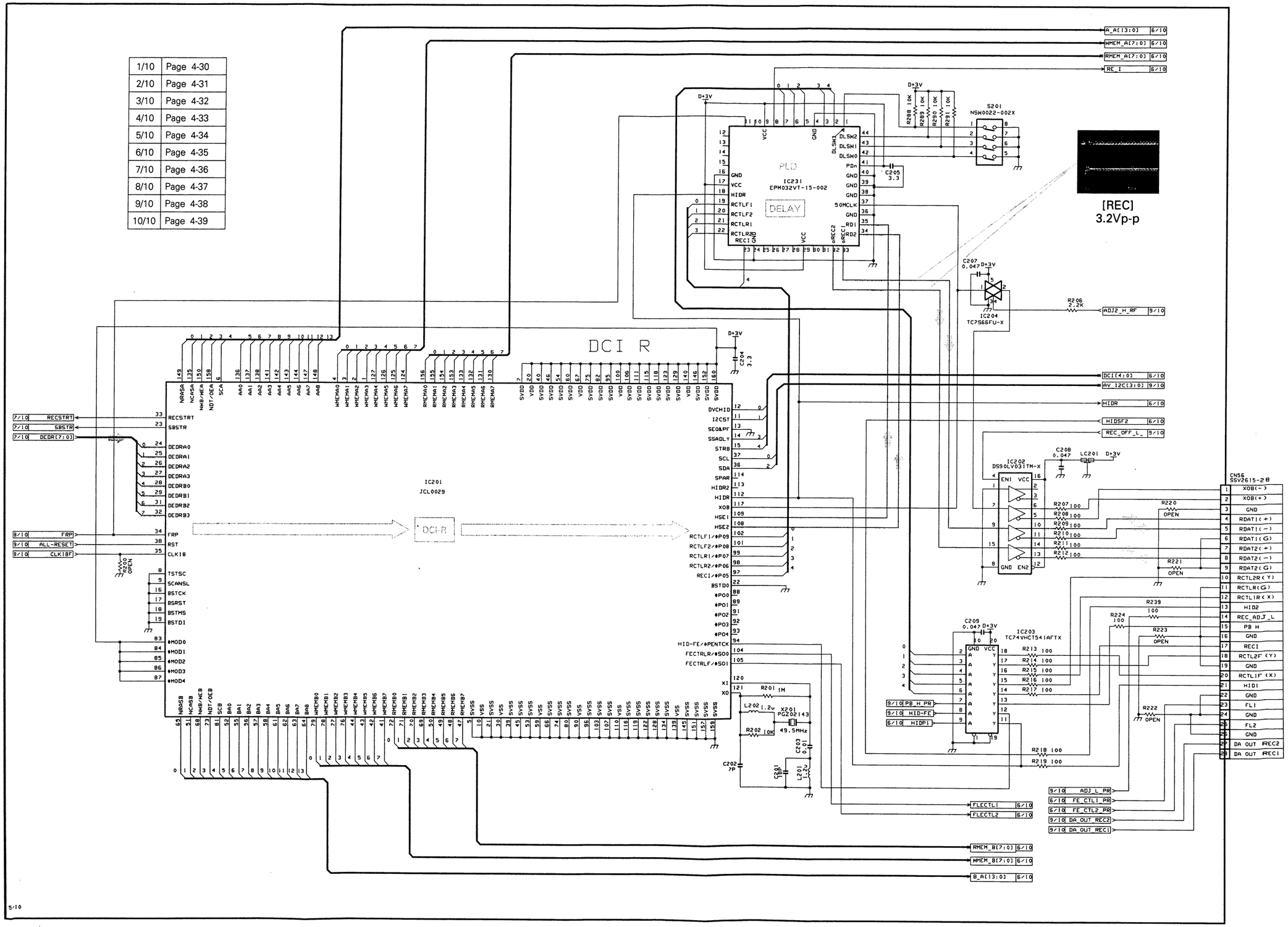

— MAIN BOARD SCHEMATIC DIAGRAM 6/10 —

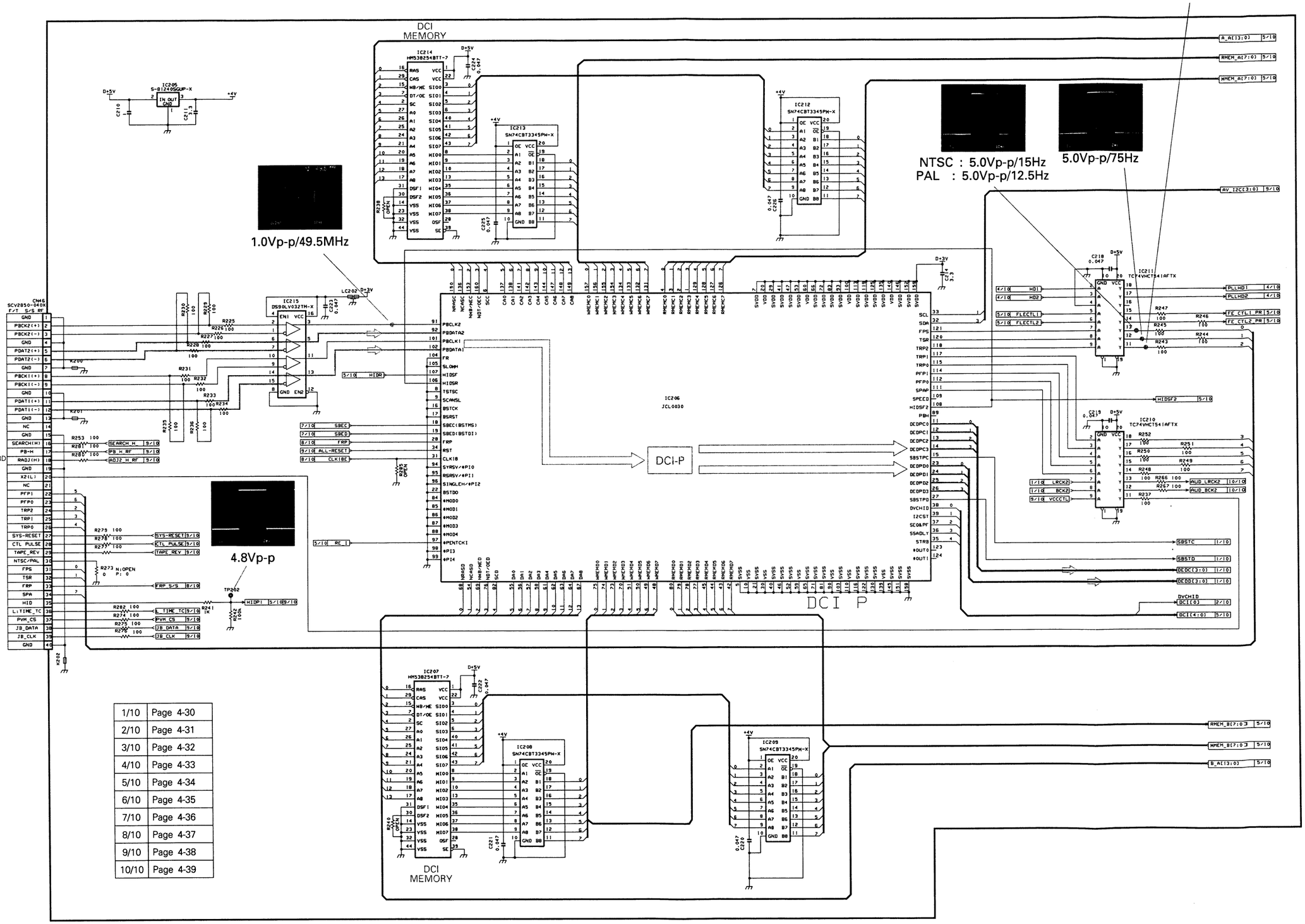

1/10	Page 4-30
2/10	Page 4-31
3/10	Page 4-32
4/10	Page 4-33
5/10	Page 4-34
6/10	Page 4-35
7/10	Page 4-36
8/10	Page 4-37
9/10	Page 4-38
10/10	Page 4-39

— MAIN BOARD SCHEMATIC DIAGRAM 7/10 —

1/10	Page 4-30
2/10	Page 4-31
3/10	Page 4-32
4/10	Page 4-33
5/10	Page 4-34
6/10	Page 4-35
7/10	Page 4-36
8/10	Page 4-37
9/10	Page 4-38
10/10	Page 4-39

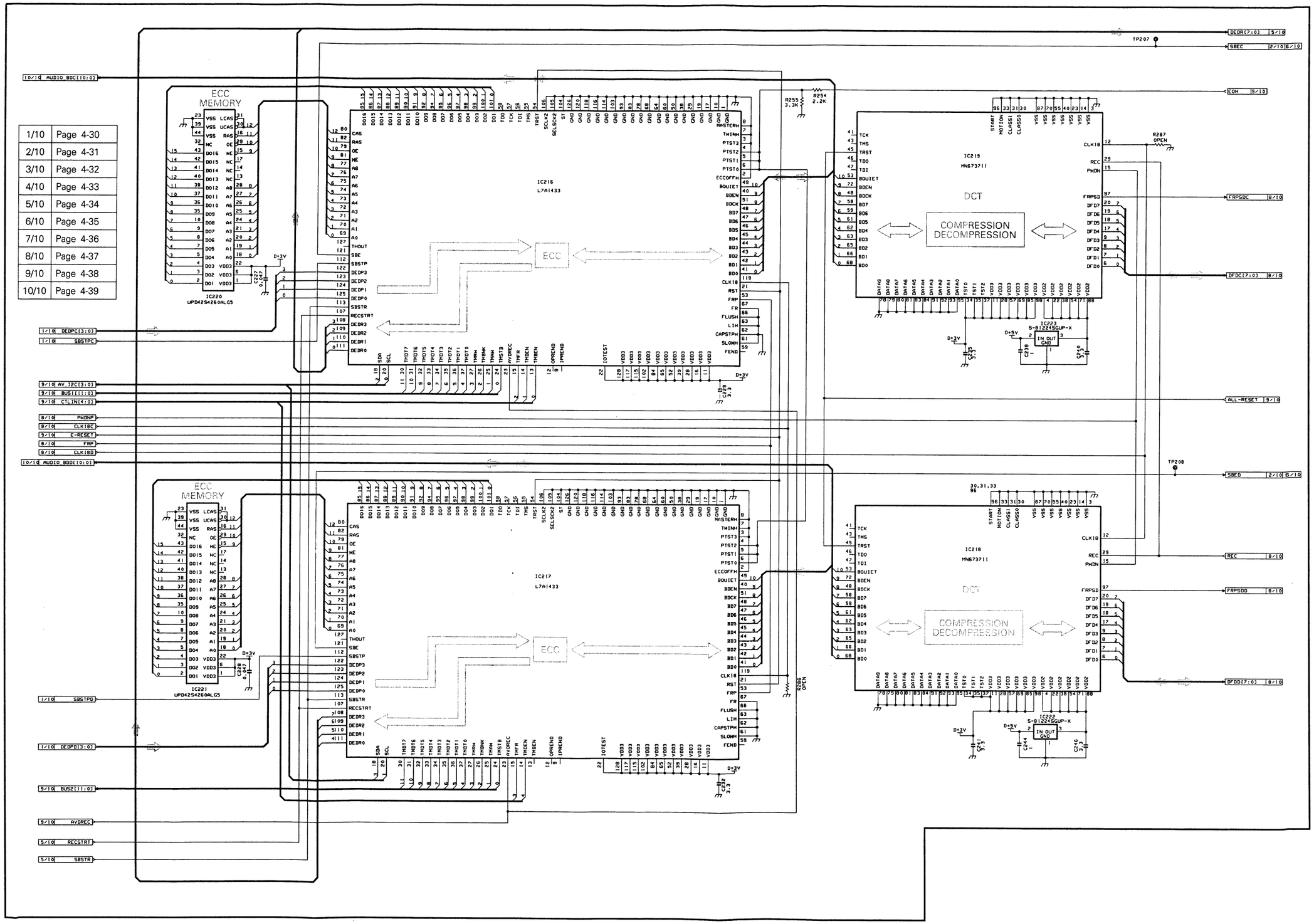

– MAIN BOARD SCHEMATIC DIAGRAM 8/10 –

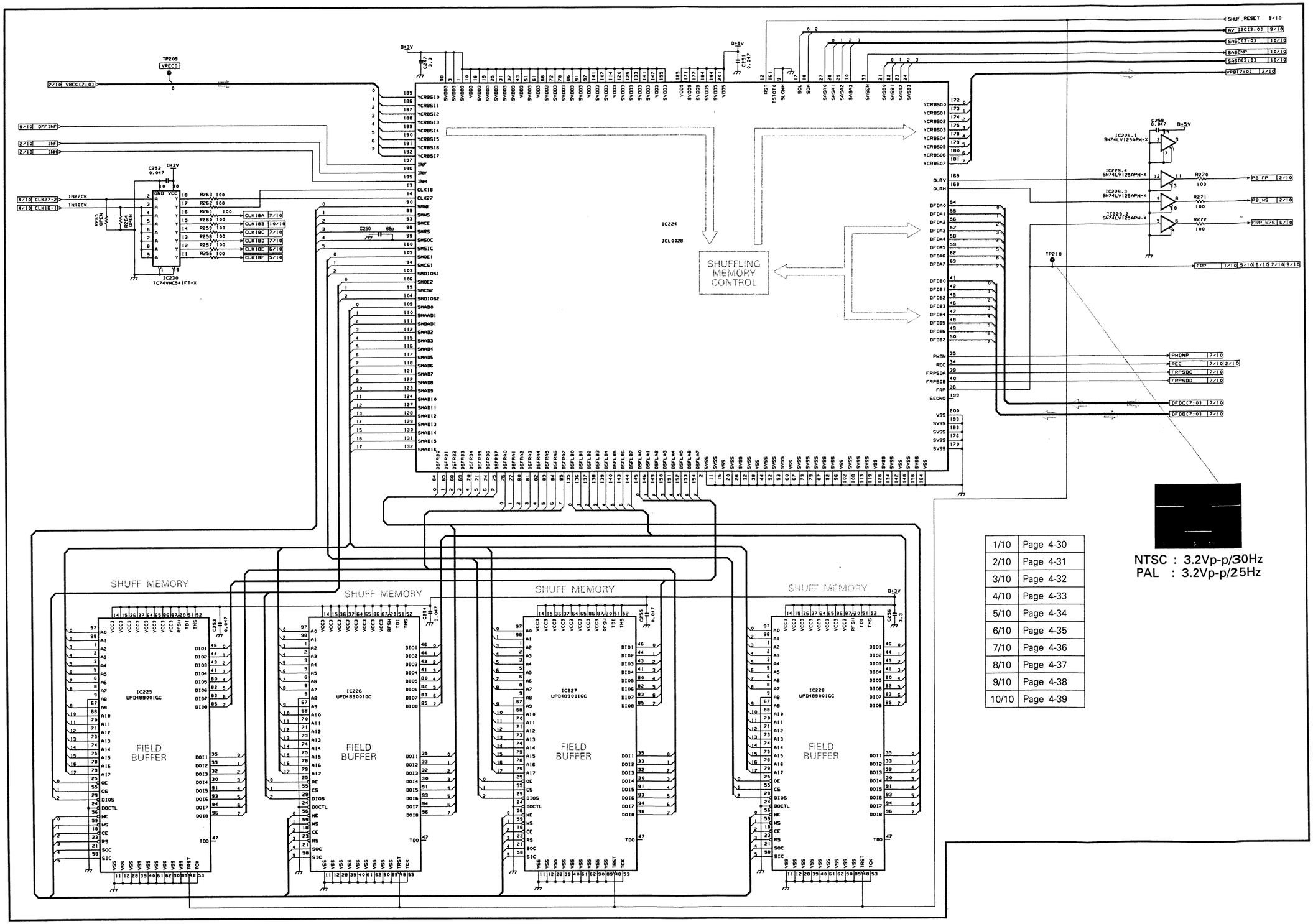

1/10	Page 4-30
2/10	Page 4-31
3/10	Page 4-32
4/10	Page 4-33
5/10	Page 4-34
6/10	Page 4-35
7/10	Page 4-36
8/10	Page 4-37
9/10	Page 4-38
10/10	Page 4-39

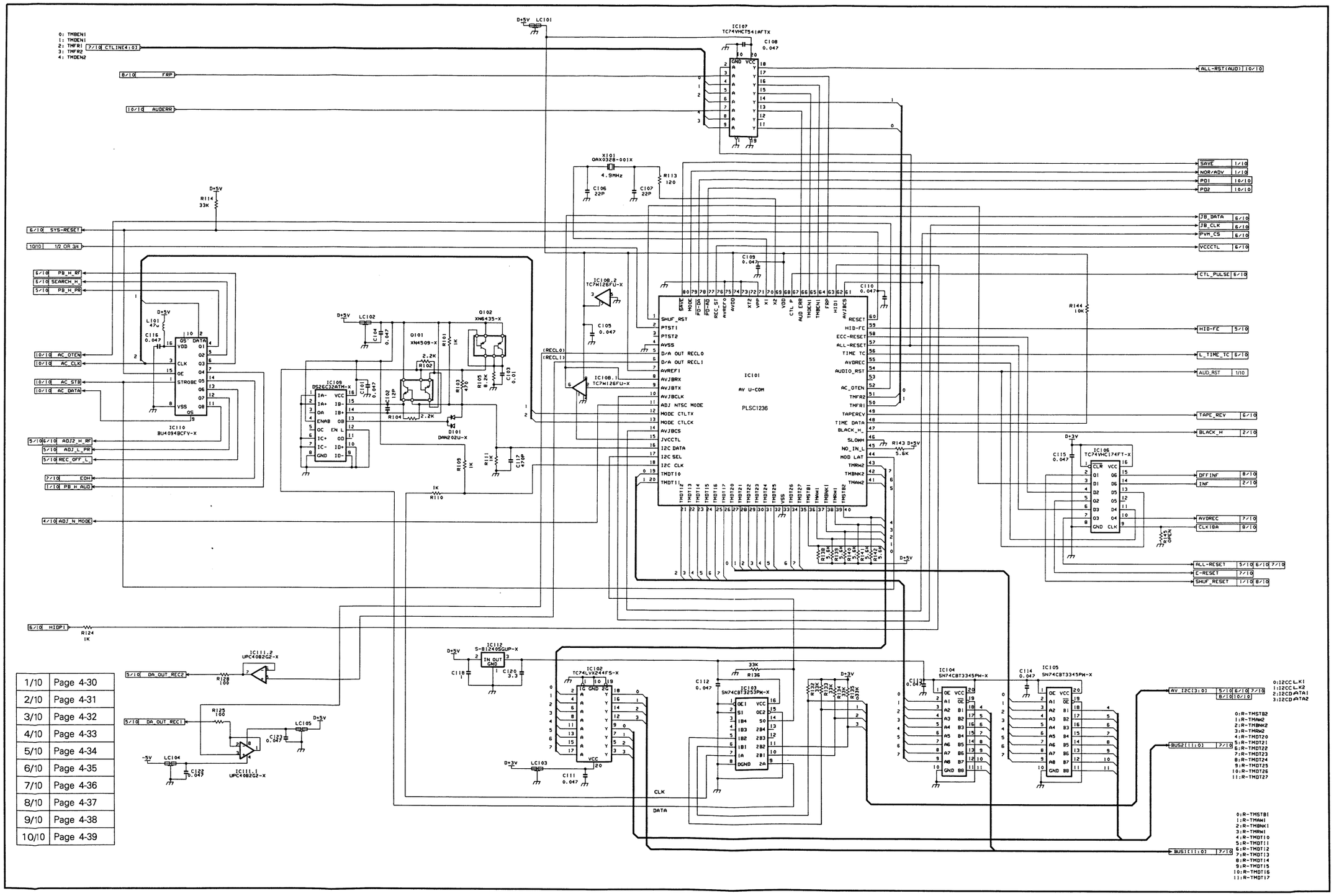

1/10	Page 4-30
2/10	Page 4-31
3/10	Page 4-32
4/10	Page 4-33
5/10	Page 4-34
6/10	Page 4-35
7/10	Page 4-36
8/10	Page 4-37
9/10	Page 4-38
10/10	Page 4-39

– MAIN BOARD SCHEMATIC DIAGRAM 10/10 –

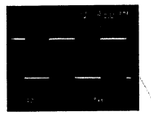

4Vp-p/48kHz

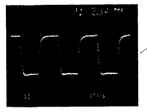

4Vp-p/3MHz

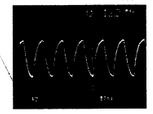

3.5Vp-p/12.2MHz

1/10	Page 4-30
2/10	Page 4-31
3/10	Page 4-32
4/10	Page 4-33
5/10	Page 4-34
6/10	Page 4-35
7/10	Page 4-36
8/10	Page 4-37
9/10	Page 4-38
10/10	Page 4-39

4.18 MAIN CIRCUIT BOARD

— SIDE A —

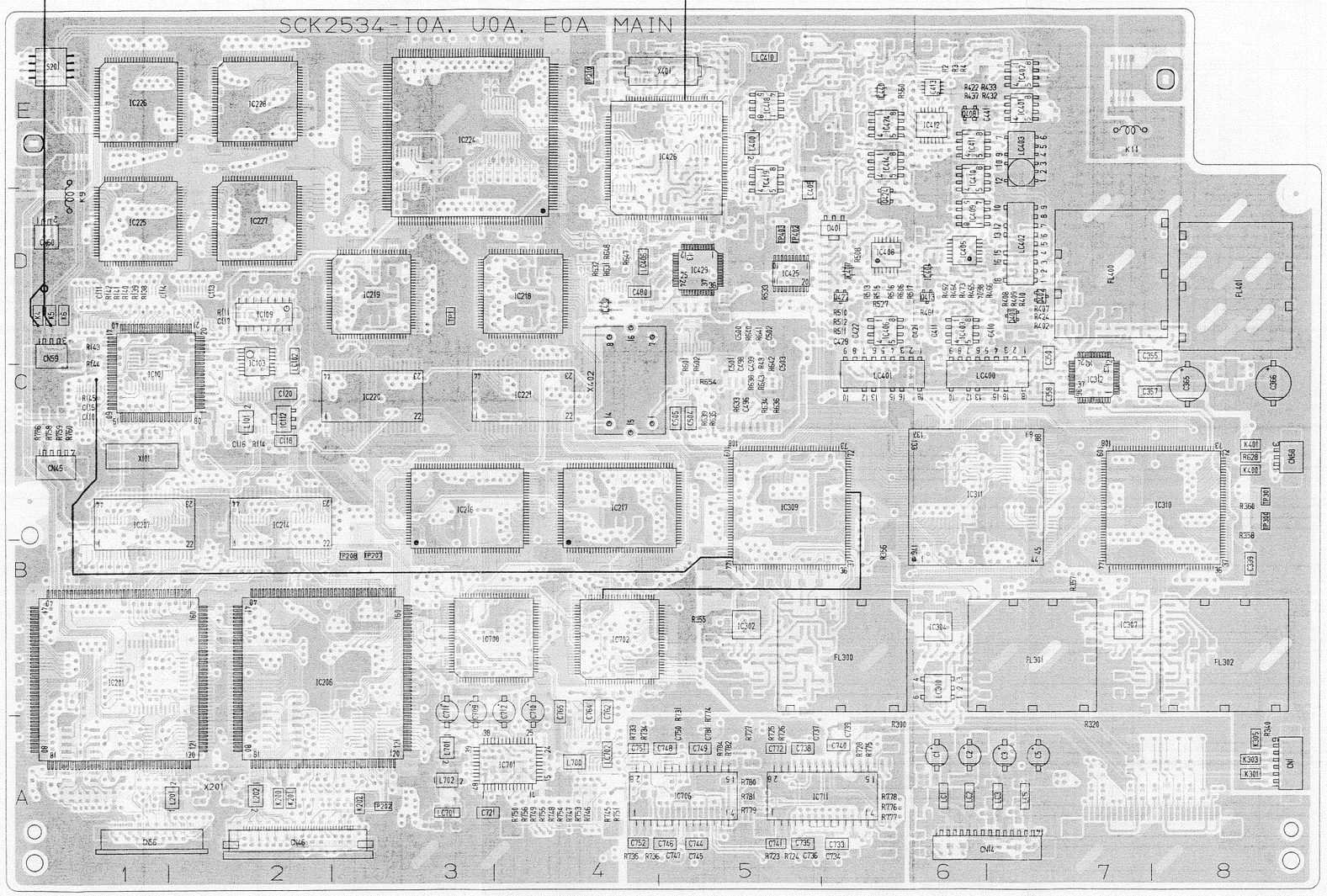

● **ADDRESS TABEL OF BOARD PARTS**

Each address may have an address error by one interval.

A-1C
Side — Y axis
X axis

IC1	B-6E	IC425	A-5D	R3	A-6E	R222	B-2A	R324	B-6A	R416	B-7D	R517	A-6D
IC101	A-1C	IC426	A-5E	R4	A-6E	R223	B-1A	R325	B-6B	R417	B-7D	R520	B-6D
IC102	B-1D	IC427	B-5E	R5	B-7E	R224	B-1A	R326	B-6B	R418	B-7D	R521	B-6D
IC103	A-2D	IC428	B-4E	R6	B-6E	R225	B-2A	R327	B-6B	R419	B-7D	R522	B-6D
IC104	B-2D	IC429	A-5D	R7	B-6E	R226	B-2A	R328	B-6B	R420	B-7E	R525	B-5D
IC105	B-1D	IC430	B-4D	R8	B-6E	R227	B-2A	R329	B-6B	R421	B-7D	R526	B-6D
IC106	B-1C	IC431	B-5C	R9	B-6E	R228	B-2A	R330	B-5B	R422	A-6E	R527	A-6D
IC107	B-1C	IC432	A-4D	R10	B-6E	R229	B-2A	R331	B-5B	R423	B-7D	R528	B-5D
IC108	B-1C	IC433	B-4E	R11	B-6E	R230	B-2A	R332	B-5B	R424	A-7D	R529	B-6E
IC109	A-2D	IC434	B-4E	R12	B-6E	R231	B-2A	R333	B-5B	R429	B-7E	R530	B-6E
IC110	B-2C	IC435	B-5C	R13	B-5E	R232	B-2A	R334	B-6B	R430	B-7E	R531	B-5D
IC111	B-2C	IC436	B-5D	R14	B-6E	R233	B-2A	R335	B-6B	R431	B-7E	R532	B-5D
IC112	A-2C	IC438	B-5C	R15	B-6E	R234	B-2A	R340	A-8A	R432	A-6E	R533	A-5D
IC201	A-1B	IC440	A-6E	R16	B-8A	R235	B-2A	R341	B-8B	R433	A-6E	R540	B-6D
IC202	B-1A	IC700	A-3B	R17	B-8A	R236	B-2A	R342	B-8B	R434	B-7E	R541	B-6D
IC203	B-1A	IC701	A-4A	R18	B-8A	R237	B-2A	R343	B-8B	R435	B-6E	R542	B-6D
IC204	B-1B	IC702	A-4B	R19	B-8A	R238	B-2C	R344	B-8B	R436	B-6E	R543	B-6D
IC205	B-1C	IC703	B-4B	R20	B-8A	R239	B-1A	R345	B-8B	R437	A-6E	R544	B-6E
IC206	A-2B	IC704	B-4B	R21	B-8A	R240	B-1C	R346	B-8B	R440	B-7C	R545	B-6E
IC207	A-1C	IC705	B-4A	R22	B-8A	R241	B-3A	R347	B-8B	R441	B-6C	R546	B-6E
IC208	B-1C	IC706	A-4A	R23	B-7A	R242	B-3A	R348	B-7B	R442	B-6D	R547	B-6E
IC209	B-1C	IC707	B-4A	R24	B-7A	R243	B-2A	R349	B-7B	R443	B-6D	R548	B-6E
IC210	B-3B	IC708	B-6A	R25	B-7A	R244	B-2A	R350	B-8B	R444	B-6D	R549	B-6D
IC211	B-3B	IC709	B-3B	R26	B-7A	R245	B-2A	R351	B-8B	R445	B-6D	R550	B-6E
IC212	B-2C	IC710	B-3B	R27	B-7A	R246	B-2A	R352	B-7B	R446	B-6D	R551	B-6E
IC213	B-2C	IC711	A-5A	R28	B-7A	R247	B-2A	R353	B-7B	R447	B-6D	R552	B-6E
IC214	A-2C	IC712	B-5A	R29	B-7A	R246	B-3A	R354	B-7B	R448	B-6D	R553	B-6E
IC215	B-2A			R30	B-7A	R249	B-2A	R355	A-5B	R449	B-6D	R554	B-6E
IC216	A-3C	Q1	B-5E	R31	B-7A	R250	B-3A	R356	A-6B	R450	B-6D	R555	B-6E
IC217	A-4C	Q2	B-6E	R32	B-7A	R251	B-3A	R357	A-7B	R451	B-6D	R557	B-6E
IC218	A-4D	Q3	B-5E	R33	B-6B	R252	B-3A	R358	A-8C	R452	B-6D	R558	B-6E
IC219	A-3D	Q4	B-6E	R34	B-4D	R253	B-2A	R359	B-7B	R453	B-6D	R559	B-6E
IC220	A-2C	Q5	B-6E	R35	B-7D	R254	B-3B	R360	A-8C	R454	B-6D	R560	A-6E
IC221	A-3C	Q6	B-5E	R36	B-7D	R255	B-3B	R363	B-6B	R455	B-7D	R561	B-6E
IC222	B-4D	Q101	B-2D	R37	B-7C	R256	B-4E	R364	B-7C	R456	B-6D	R562	B-6E
IC223	B-3D	Q102	B-2D	R38	B-7C	R257	B-4E	R365	B-5C	R457	B-6D	R563	B-6E
IC224	A-3E	Q300	B-8D	R39	B-7C	R258	B-4E	R366	B-7B	R458	B-6D	R564	B-6E
IC225	A-1D	Q301	B-7C	R40	B-7C	R259	B-4E	R367	B-6C	R459	B-6D	R565	B-6E
IC226	A-1E	Q302	B-7C	R41	B-6E	R260	B-3E	R368	B-6C	R460	B-6D	R566	B-6E
IC227	A-2D	Q303	B-7D	R42	B-6E	R261	B-3E	R369	B-6C	R461	A-6D	R567	B-6E
IC228	A-2E	Q304	B-7C	R43	A-5C	R262	B-3E	R370	B-7C	R462	A-6D	R568	B-6E
IC229	B-3E	Q305	B-7C	R101	B-2D	R263	B-3E	R371	B-7C	R464	A-6D	R569	B-5E
IC230	B-3E	Q401	A-7D	R102	B-2D	R264	B-3E	R372	B-7C	R465	A-6D	R570	B-5E
IC231	B-1B	Q402	A-7D	R103	B-2D	R265	B-3E	R373	B-7D	R466	A-6D	R571	B-5E
IC300	B-5B	Q403	B-7D	R104	B-2D	R266	B-2A	R374	B-7D	R467	B-6D	R572	B-5E
IC301	B-5B	Q404	B-7D	R105	B-2D	R267	B-2A	R375	B-8D	R470	B-6D	R573	B-5E
IC302	A-5B	Q405	B-5E	R109	B-2D	R270	B-3E	R376	B-7C	R471	B-6D	R574	B-4E
IC303	B-6B	Q406	B-5E	R110	B-2D	R271	B-3E	R377	B-7C	R472	B-6D	R575	B-5E
IC304	A-6B	Q408	A-6E	R111	A-2D	R272	B-3E	R378	B-8C	R473	A-6D	R576	B-5E
IC305	B-7B	Q409	B-6D	R113	B-1C	R273	B-2A	R379	B-7C	R480	B-6C	R578	B-4E
IC306	B-7B	Q410	B-6D	R114	A-2C	R274	B-3A	R380	B-7C	R481	B-6C	R579	B-4E
IC307	A-7B	Q411	B-6D	R124	B-1C	R275	B-3A	R381	B-7D	R482	B-6C	R581	B-5D
IC308	B-6C	Q412	B-6D	R125	B-2C	R276	B-3A	R382	B-7D	R483	B-6D	R582	B-5E
IC309	A-5C	Q413	A-6D	R128	B-2C	R277	B-2A	R383	B-8D	R484	B-6D	R583	B-5E
IC310	A-8C	Q414	B-5D	R132	B-2C	R278	B-2A	R384	B-7C	R485	B-6D	R584	B-5E
IC311	A-6C	Q415	B-5D	R133	B-2C	R279	B-2A	R385	B-7C	R486	B-6D	R585	B-5E
IC312	A-7C	Q416	B-5D	R134	B-2C	R280	B-2A	R386	B-7C	R487	B-6D	R586	B-5E
IC313	B-7C	Q417	B-5D	R135	B-2C	R281	B-2A	R387	B-7C	R488	B-5D	R587	B-5E
IC314	B-7C	Q418	B-6D	R136	B-2D	R282	B-3A	R388	B-7C	R489	B-6D	R588	B-5E
IC315	B-5B	Q419	B-6D	R138	A-1D	R285	B-2B	R389	B-7C	R490	B-6D	R589	B-5E
IC316	B-8C	Q420	B-6D	R139	A-1D	R286	B-3C	R390	B-1D	R491	B-6D	R590	B-5E
IC400	B-7D	Q421	B-6D	R140	A-1D	R287	B-2D	R391	B-6C	R492	B-6D	R591	B-5D
IC401	A-7E	Q422	A-6D	R141	A-1D	R288	B-1E	R392	B-6C	R493	B-6D	R592	B-5D
IC402	A-7E	Q423	B-6D	R142	A-1D	R289	B-1E	R393	B-6C	R494	B-6D	R593	B-5E
IC403	A-6D	Q424	A-6D	R143	A-1D	R290	B-1E	R394	B-6C	R495	B-5D	R594	B-5E
IC404	A-6D	Q425	B-5E	R144	A-1D	R291	B-1E	R395	B-6C	R496	B-6D	R595	B-5D
IC405	A-6D	Q426	B-5E	R145	A-1C	R300	A-6A	R396	B-7C	R497	B-6D	R596	B-5E
IC406	A-6D	Q427	B-5E	R200	B-1B	R301	B-5B	R397	B-7C	R498	B-6D	R597	B-5E
IC407	A-6D	Q428	B-5C	R201	B-2A	R302	B-5B	R398	B-7C	R499	B-6D	R598	B-4E
IC408	A-6D			R202	B-2A	R303	B-5B	R399	B-7C	R500	B-6D	R599	B-4E
IC409	A-6D	D1	B-7E	R206	B-1B	R304	B-5B	R400	B-8D	R501	B-6D	R600	B-4E
IC410	A-6E	D2	B-6E	R207	B-1A	R305	B-5B	R401	B-7D	R502	B-6D	R601	A-5C
IC411	A-6E	D3	B-6E	R208	B-1A	R306	B-5B	R402	A-7D	R503	B-6D	R602	A-5C
IC412	A-6E	D4	B-6E	R209	B-1A	R307	B-5B	R403	B-7D	R504	B-6D	R603	B-5D
IC413	A-6E	D5	B-8C	R210	B-1A	R308	B-5B	R404	B-7D	R505	B-6D	R604	A-6D
IC414	A-6E	D101	B-2D	R211	B-1A	R309	B-5B	R405	B-7D	R506	B-6D	R605	B-5E
IC415	B-5D	D401	A-6D	R212	B-1A	R310	B-5B	R406	B-7D	R507	B-6D	R606	A-6D
IC416	B-4E	D402	B-6D	R213	B-2A	R311	B-6B	R407	A-7D	R508	A-6D	R610	B-5D
IC417	B-5E	D403	B-6D	R214	B-1A	R312	B-5B	R408	A-7D	R509	B-6D	R611	B-5D
IC418	A-5E	D405	B-5E	R215	B-1A	R313	B-5B	R409	A-7D	R510	A-6D	R612	B-5D
IC419	A-5E	D406	B-5E	R216	B-1A	R314	B-5B	R410	A-7D	R511	A-6D	R623	B-4E
IC420	B-5E	D407	B-5D	R217	B-1A	R315	B-5B	R411	B-7D	R512	A-6D	R624	B-4D
IC421	B-5E	D700	B-3B	R218	B-1A	R320	A-7A	R412	B-7D	R513	A-6D	R625	B-4D
IC422	B-4E			R219	B-1A	R321	B-6B	R413	B-7D	R514	B-6D	R626	B-5D
IC423	B-4D	R1	B-7E	R220	B-1A	R322	B-6A	R414	B-7D	R515	A-6D	R628	A-8C
IC424	A-6E	R2	A-6E	R221	B-1A	R323	B-6B	R415	B-7D	R516	A-6D	R629	B-4D

4-40

R630	B-4D	R779	A-5A	C256	B-2E	C425	B-6D	C720	B-4A	CN46	A-2A
R631	A-4D	R780	A-5A	C259	B-3D	C426	B-6D	C721	A-3A	CN56	A-1A
R632	A-4D	R781	A-5A	C300	B-5B	C427	B-6D	C722	B-3A	CN58	A-8C
R633	A-5C	R782	A-5A	C301	B-5B	C428	B-6D	C723	B-3A	CN59	A-1D
R634	A-5C	R784	A-5A	C302	B-5B	C429	A-6D	C724	B-4B	CN60	A-1D
R635	A-5C	R786	A-1C	C303	B-5B	C430	B-6D	C725	B-4B		
R636	A-5C	R787	B-4A	C304	B-5B	C431	B-6D	C726	B-4B	TB1	B-1E
R637	B-5D			C305	B-5B	C432	B-6D	C727	B-4B	TB2	B-8E
R638	A-5C	VR400	B-7D	C306	B-5B	C433	B-6D	C728	B-4B		
R639	A-5C	VR401	B-6E	C307	B-5B	C434	B-6D	C729	B-4B	FL300	A-6B
R640	A-5D			C308	B-5B	C435	B-6D	C730	B-4B	FL301	A-7B
R641	A-5D	C1	A-6A	C309	B-5B	C436	B-6D	C731	B-4B	FL302	A-8B
R642	A-5C	C2	A-6A	C310	B-6B	C437	B-6D	C732	B-4B	FL400	A-7D
R643	A-5C	C3	A-7A	C311	B-6B	C438	B-6D	C733	A-6A	FL401	A-8D
R644	B-5E	C4	B-6A	C312	B-5B	C439	B-6D	C734	A-6A		
R645	B-5E	C5	A-7A	C313	B-5B	C440	B-6E	C735	A-5A	LC1	A-6A
R646	B-4D	C6	B-7A	C314	B-5B	C441	A-6E	C736	A-5A	LC2	A-6A
R647	A-4D	C7	B-6E	C315	B-6B	C442	B-6E	C737	A-5A	LC3	A-7A
R648	A-4D	C8	B-6E	C316	B-5B	C443	B-6E	C738	A-5A	LC4	B-6A
R649	B-4D	C9	B-6E	C317	B-6B	C444	B-6E	C739	A-6A	LC5	A-7A
R650	B-4D	C10	B-6E	C318	B-6B	C445	B-6E	C740	A-6A	LC6	B-7A
R651	B-5C	C11	B-5E	C319	B-6B	C446	B-6E	C741	A-5A	LC101	B-1C
R652	B-5C	C12	B-7B	C320	B-6B	C447	B-6E	C742	B-4A	LC102	A-2D
R653	B-5D	C13	B-7C	C321	B-6B	C448	B-6E	C743	B-4A	LC103	B-1D
R654	A-5C	C14	B-4C	C322	B-7B	C449	B-6E	C744	A-5A	LC104	B-2C
R655	B-4D	C15	B-4D	C323	B-7B	C450	B-4E	C745	A-5A	LC105	B-2D
R656	B-4D	C16	B-5E	C324	B-8B	C451	B-4E	C746	A-5A	LC201	B-1A
R700	B-3A	C17	B-5E	C325	B-8B	C452	B-4E	C747	A-5A	LC202	B-2A
R701	B-3A	C101	B-2D	C326	B-8B	C453	B-4E	C748	A-5A	LC300	A-6B
R702	B-3A	C102	B-2D	C327	B-8B	C454	B-5E	C749	A-5A	LC301	B-5B
R703	B-3A	C103	B-2D	C328	B-7B	C455	B-5E	C750	A-5A	LC400	A-6C
R704	B-4A	C104	B-2D	C329	B-7B	C460	B-5D	C751	A-4A	LC401	A-6C
R705	B-4A	C105	B-1D	C330	B-7B	C461	B-4D	C752	A-4A	LC402	A-7D
R706	B-4A	C106	B-1C	C331	B-7B	C462	B-4E	C753	B-5A	LC403	A-7E
R707	B-4A	C107	B-1C	C332	B-7B	C463	B-4E	C754	B-5A	LC404	B-6E
R708	B-4A	C108	B-1C	C333	B-7B	C464	B-4D	C755	B-6A	LC405	A-5D
R709	B-3A	C109	B-1C	C334	B-6C	C465	B-5D	C756	B-6A	LC406	A-4D
R710	B-3A	C110	A-1C	C335	B-5C	C466	B-5D	C757	B-6A	LC407	B-5D
R711	B-3A	C111	A-1D	C336	B-5C	C467	B-5E	C758	B-3A	LC408	B-4D
R712	B-3A	C112	B-2D	C339	A-8B	C468	B-5E	C759	B-6A	LC409	B-4D
R713	B-3A	C113	A-2D	C340	B-7C	C469	B-5E	C760	B-3A	LC410	A-5E
R714	B-4B	C114	A-1D	C344	B-6B	C470	B-5E	C762	A-4B	LC700	B-4A
R715	B-4B	C115	A-1C	C345	B-7C	C471	B-5E	C764	A-4B	LC701	A-3A
R716	B-4B	C116	A-2C	C348	B-7C	C472	B-5E	C765	A-4B	LC702	A-4A
R717	B-4B	C117	A-2D	C349	B-7C	C473	B-5E	C767	B-3B		
R720	B-5A	C118	A-2C	C350	A-7D	C474	B-5D	C769	B-4B	K1	B-6A
R723	A-5A	C120	A-2C	C351	B-7D	C475	B-4E	C771	B-3B	K2	B-6A
R724	A-5A	C122	B-2C	C352	B-8D	C476	B-5D	C772	A-5A	K3	B-6A
R725	A-5A	C123	B-2C	C353	B-7D	C477	B-5E	C773	B-6A	K4	A-1D
R726	A-5A	C201	B-2A	C354	B-8C	C480	A-4D	C774	B-6A	K5	A-1D
R727	A-5A	C202	B-2A	C355	A-7D	C481	B-5D	C775	B-6A	K6	A-1D
R728	A-6A	C203	B-2A	C356	B-7C	C482	B-5D	C776	B-6A	K7	B-8A
R731	A-5A	C204	B-1B	C357	A-7C	C483	B-5D	C777	B-6A	K8	B-7A
R732	B-5A	C205	B-2B	C358	A-7C	C491	B-5D	C778	B-6A	K9	A-1D
R733	A-4A	C207	B-1B	C359	B-7D	C492	B-4D	C779	B-6A	K10	B-1E
R734	A-4A	C208	B-1A	C360	B-7C	C493	B-4E	C780	B-6A	K11	A-7E
R735	A-4A	C209	B-2A	C361	B-7C	C494	B-4E	C781	A-5A	K12	B-7E
R736	A-4A	C210	B-1C	C362	B-7D	C495	B-5E	C782	B-3B	K200	A-2A
R737	B-4A	C211	B-1C	C363	B-5B	C496	A-5C			K201	A-2A
R738	B-4A	C214	B-3B	C365	A-8C	C498	A-5C	L101	A-2C	K202	A-3A
R739	B-4A	C218	B-3B	C366	A-8C	C499	A-5C	L201	A-1A	K300	B-8A
R740	B-4A	C219	B-3B	C367	B-7C	C500	A-5D	L202	A-2A	K301	A-8A
R741	B-4A	C220	B-1B	C368	B-1D	C501	A-5C	L400	A-5E	K302	B-8A
R742	B-4A	C221	B-1B	C400	B-7D	C502	A-5D	L700	A-4A	K303	A-8A
R745	A-4A	C222	B-2B	C401	B-7D	C503	A-5C	L701	A-3A	K304	B-8A
R746	A-4A	C223	B-2A	C402	B-7D	C504	A-5C	L702	A-3A	K305	A-8A
R747	A-4A	C224	B-2B	C403	B-7D	C505	A-5C			K400	A-8C
R748	A-4A	C225	B-2B	C405	B-7E	C700	B-3B	TP1	A-3D	K401	A-8C
R749	A-4A	C226	B-2C	C406	B-7E	C701	B-3B	TP2	B-4C	K700	B-4A
R750	A-4A	C227	B-2C	C408	B-7E	C702	B-3B	TP202	A-3A	K701	B-4A
R751	A-4A	C228	B-3C	C409	B-7E	C703	B-4B	TP207	A-3B		
R753	A-4A	C229	B-3C	C410	A-6D	C704	B-4B	TP208	A-3B	TH700	B-3A
R754	A-4A	C232	B-4C	C411	A-6D	C705	B-4B	TP209	B-3D		
R755	A-4A	C235	B-3D	C412	B-6D	C706	B-3B	TP210	A-4E	S201	A-1E
R756	A-4A	C238	B-3D	C413	B-6D	C707	B-3A	TP300	A-8C		
R758	A-1C	C240	B-3D	C414	B-6D	C709	A-3B	TP301	A-8C	X101	A-1C
R759	A-1C	C241	B-4D	C415	B-6D	C710	A-4B	TP400	B-6D	X201	A-2A
R760	A-1C	C244	B-4D	C416	B-6D	C711	A-3B	TP402	A-5D	X401	A-4E
R761	B-3B	C246	B-4D	C417	B-6D	C712	A-4B	TP403	A-5D	X402	A-4C
R765	B-3B	C247	B-3E	C418	B-6D	C713	B-3A				
R772	B-5A	C250	B-3E	C419	B-6D	C714	B-4A	CN1	A-8A		
R774	A-5A	C251	B-3D	C420	B-6D	C715	B-4A	CN14	A-6A		
R775	A-6A	C252	B-3E	C421	A-6D	C716	B-4A	CN32	B-7A		
R776	A-6A	C253	B-1D	C422	A-6D	C717	B-3A	CN43	B-5A		
R777	A-6A	C254	B-1E	C423	B-5D	C718	B-4A	CN44	B-4A		
R778	A-6A	C255	B-2D	C424	B-6D	C719	B-4A	CN45	A-1C		

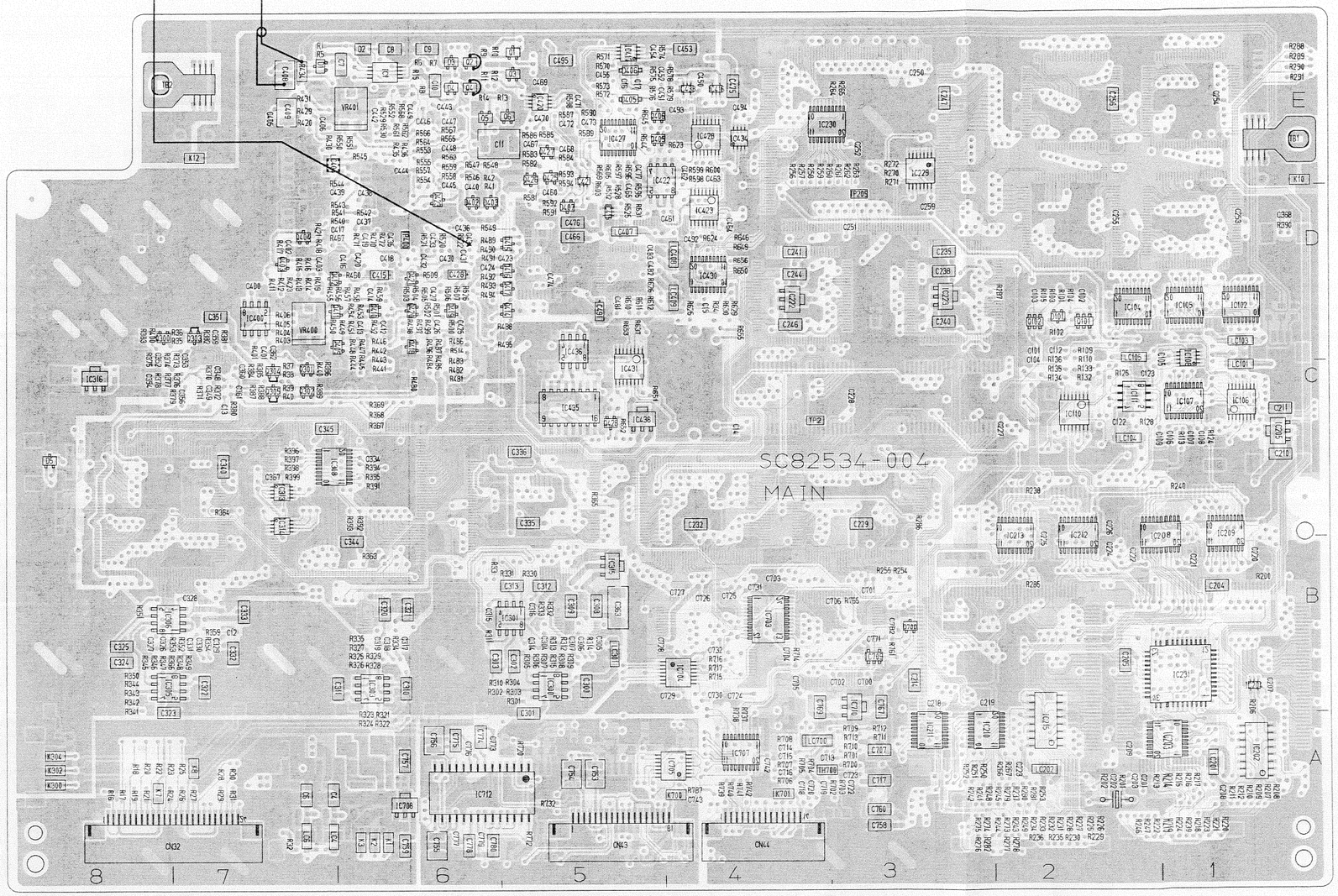

4-41

– INNER PATTERN (SIDE A) –

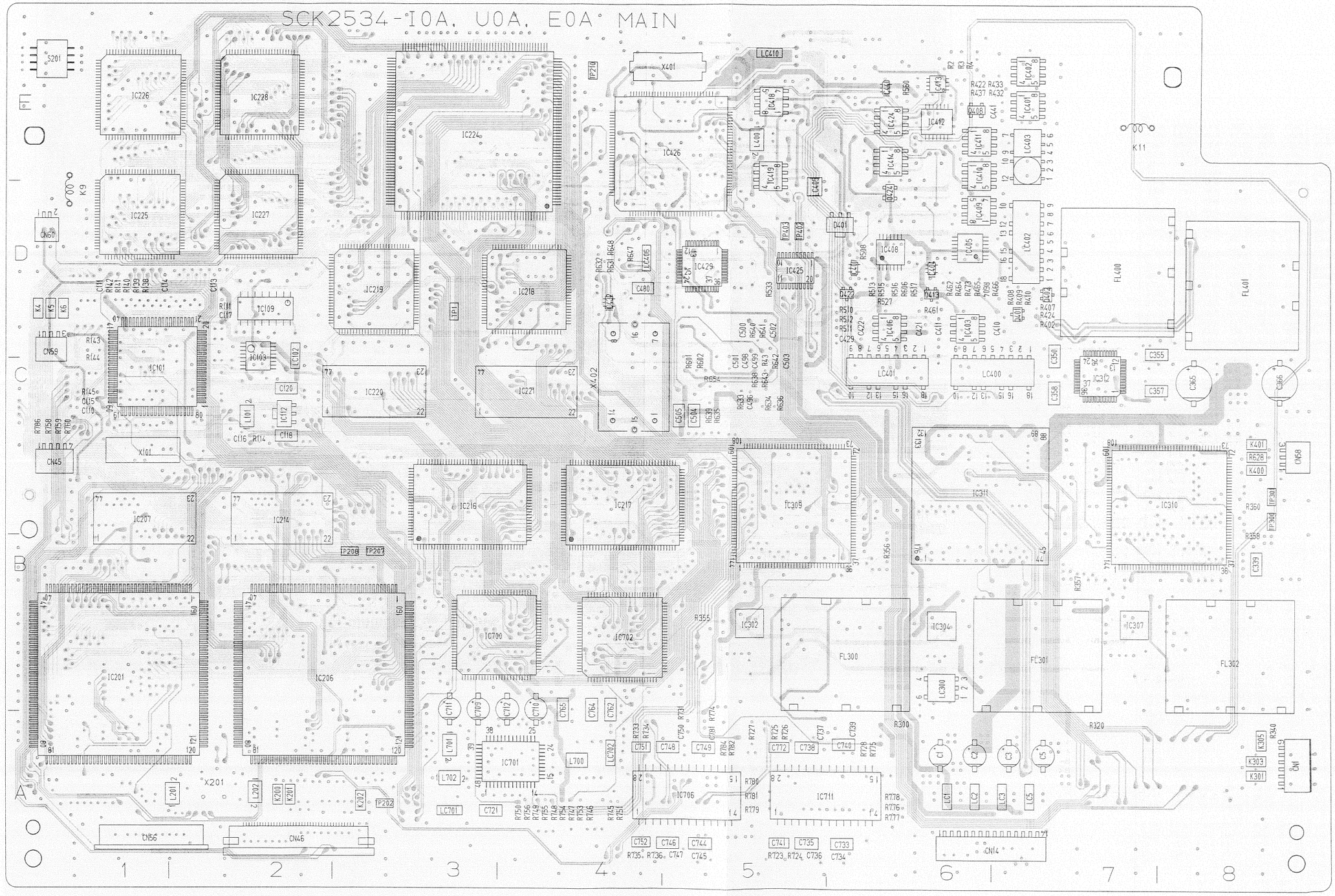

– INNER PATTERN (SIDE B) –

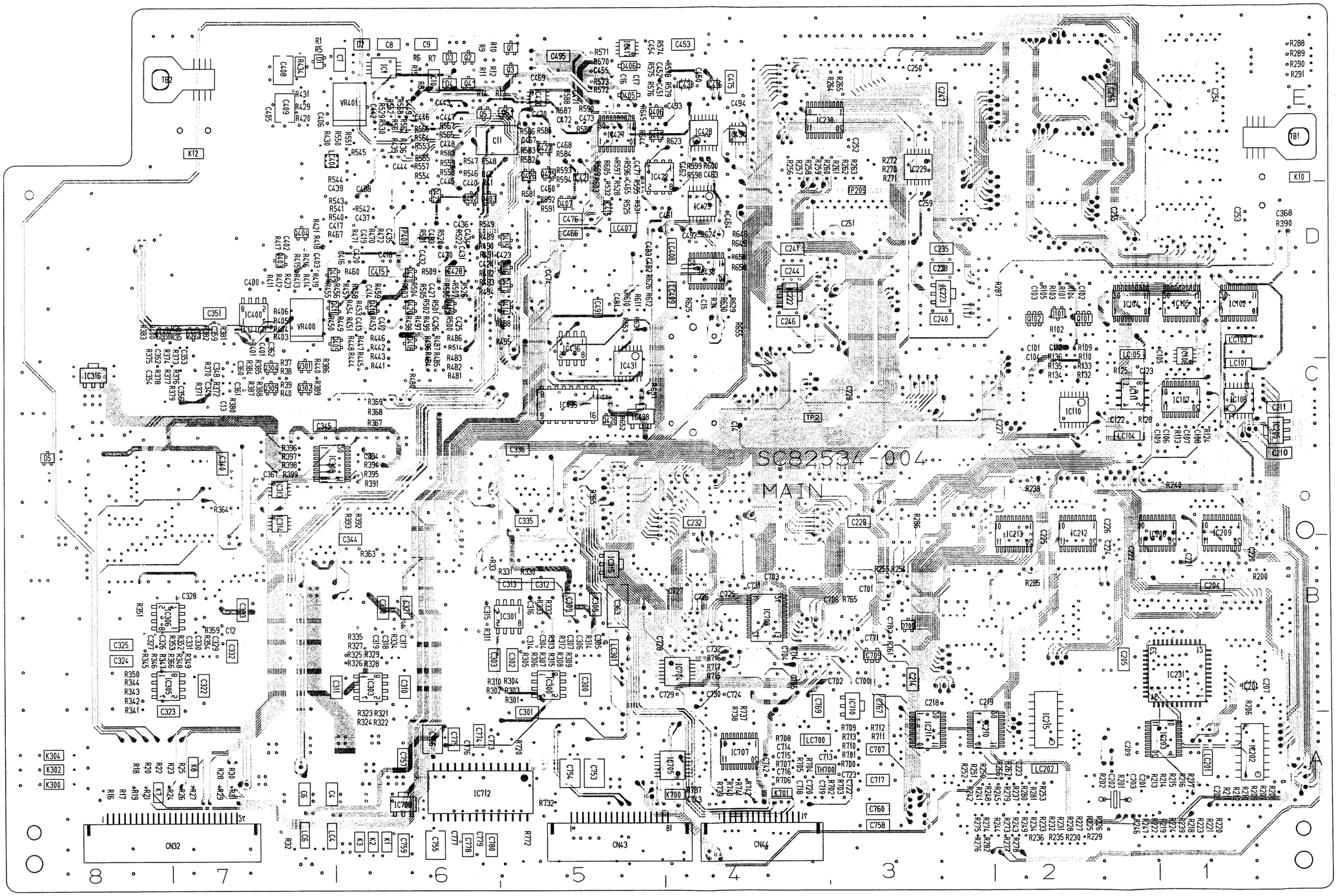

4.19 SS/RFP BOARD SCHEMATIC DIAGRAM 07

– SS/RFP BOARD SCHEMATIC DIAGRAM 1/6 –

✳ : Not mounted.

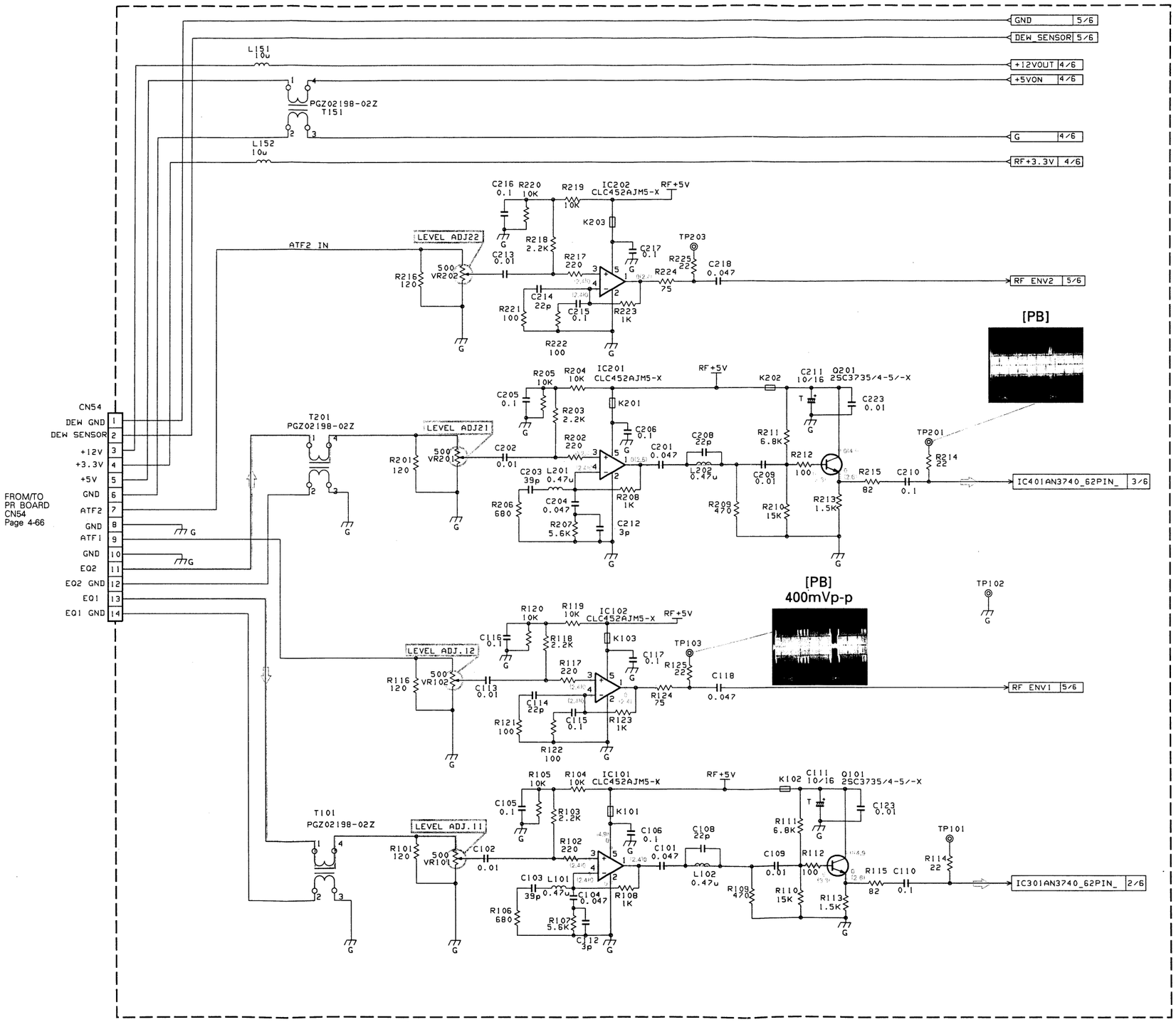

– SS/RFP BOARD SCHEMATIC DIAGRAM 2/6 –

✳ : Not mounted.

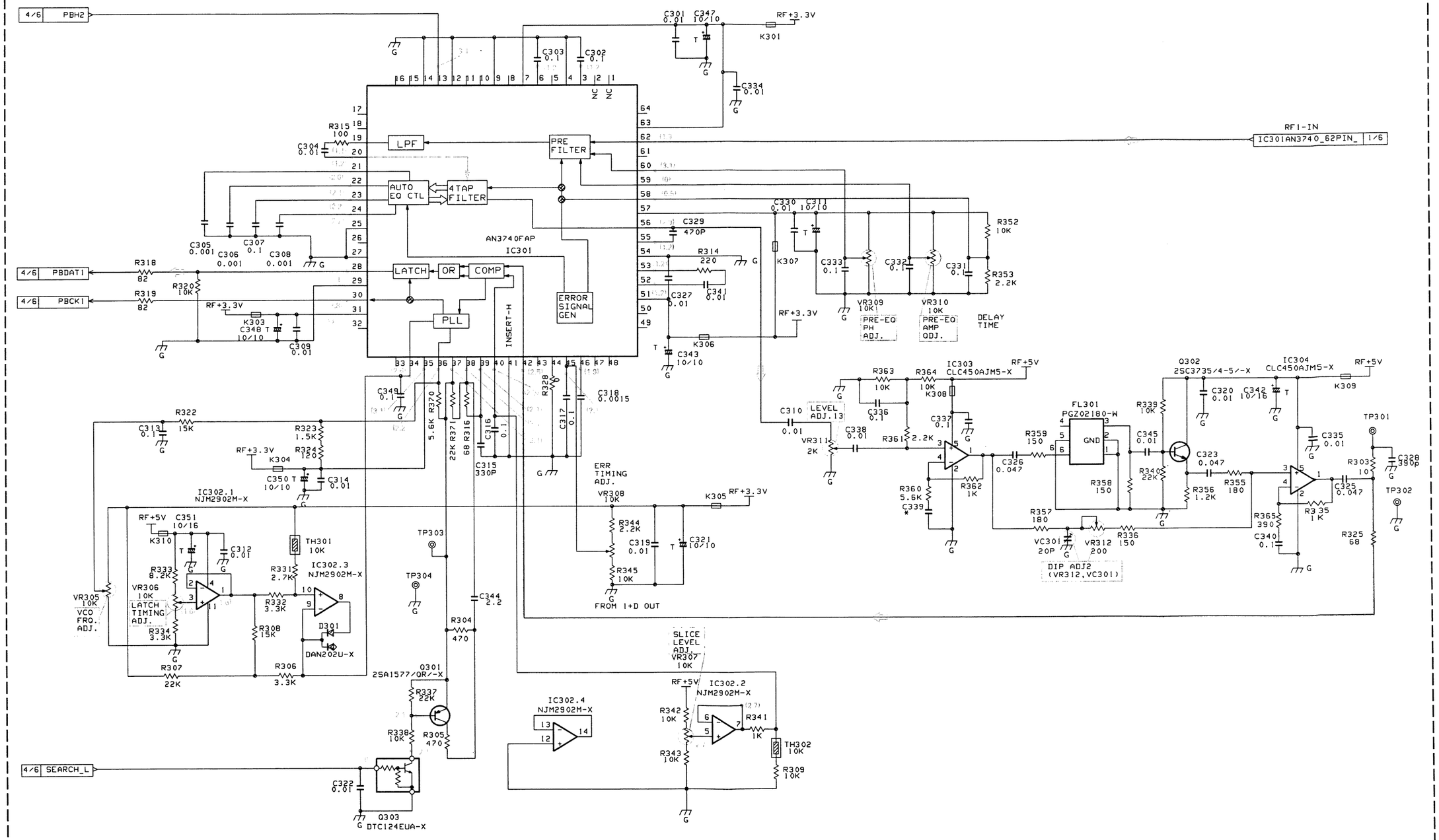

– SS/RFP BOARD SCHEMATIC DIAGRAM 3/6 –

✳ : Not mounted.

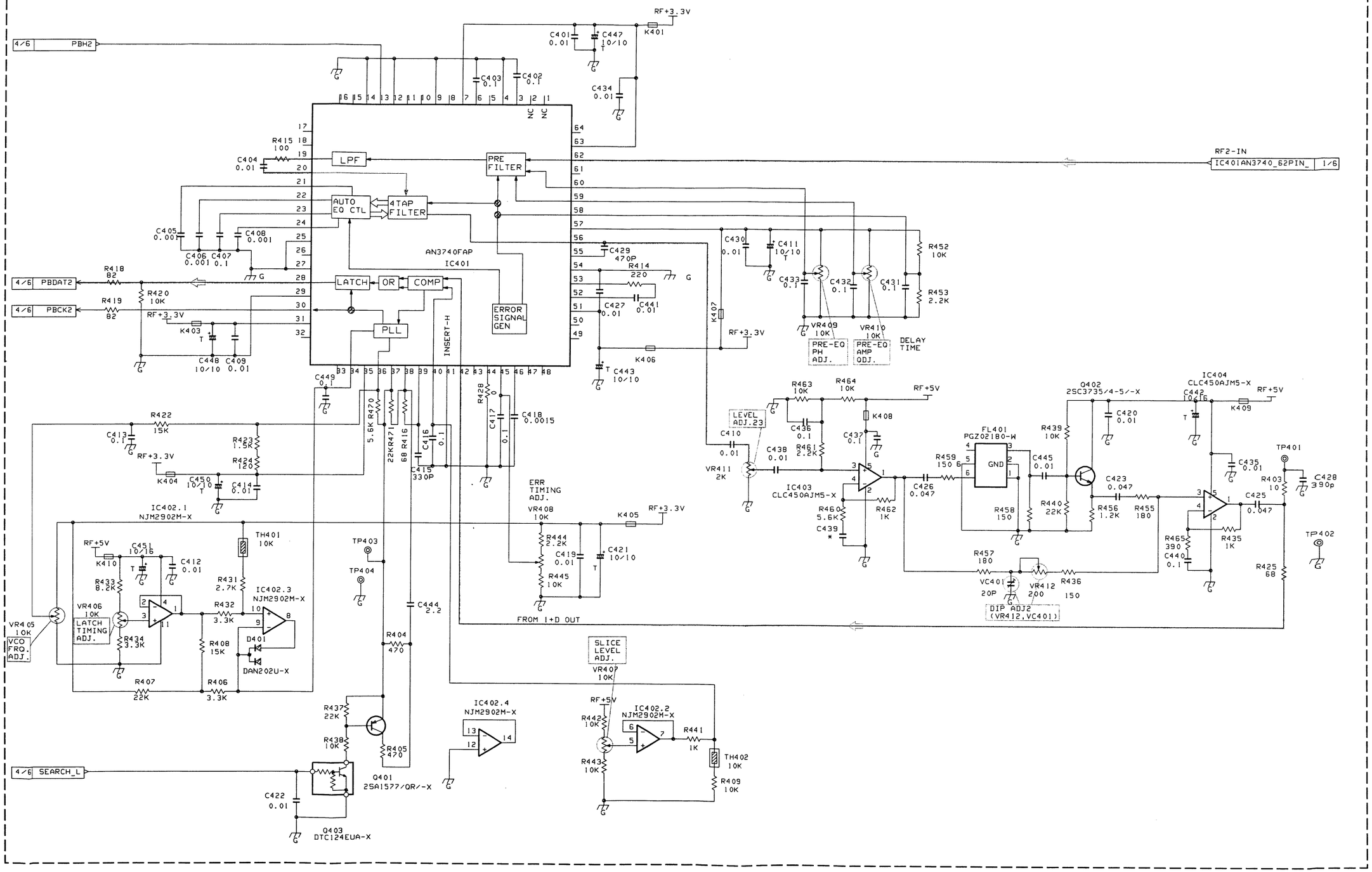

4-46

– SS/RFP BOARD SCHEMATIC DIAGRAM 4/6 –

✳ : Not mounted.

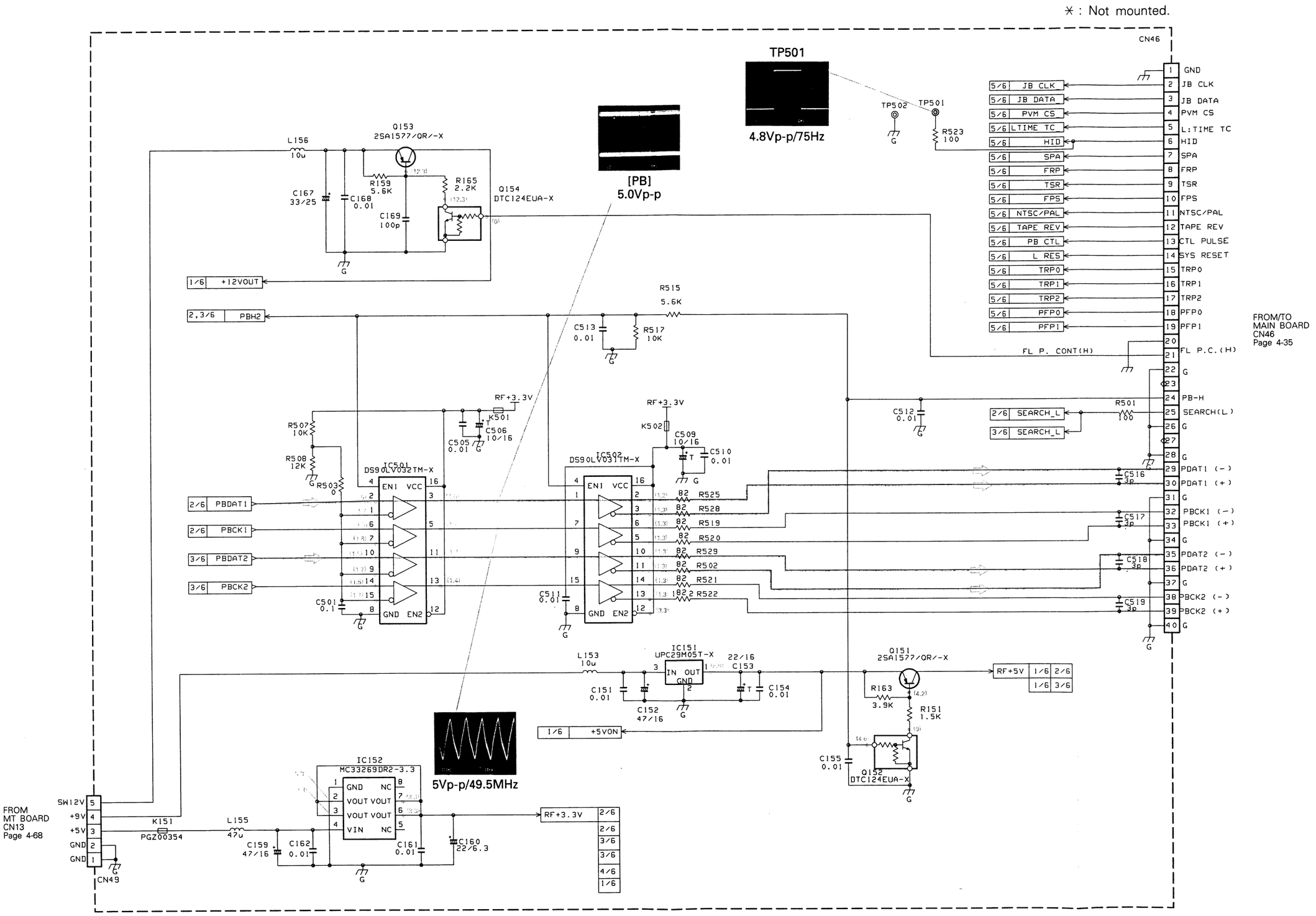

– SS/RFP BOARD SCHEMATIC DIAGRAM 5/6 –

✳ : Not mounted.

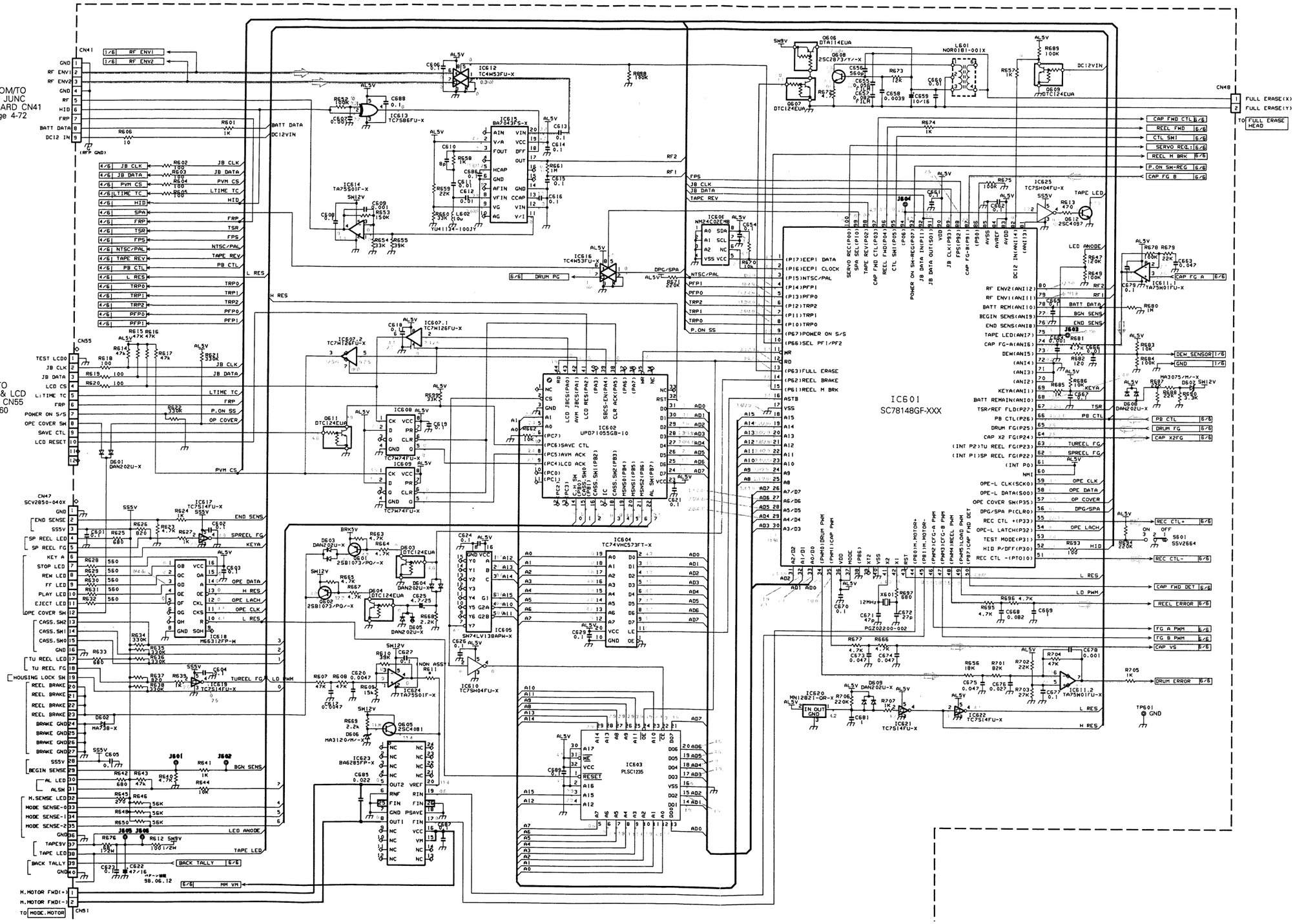
FROM/TO I/O JUNC BOARD CN41 Page 4-72
FROM/TO AUDIO & LCD BOARD CN55 Page 4-60
FROM/TO MEC I/F BOARD CN47 Page 4-6
IC601 SC78148GF-XXX
CN41
CN55
CN47
CN48
CN51
RF ENV1
RF ENV2
BATT DATA
DC12VIN
JB CLK
JB DATA
PVM CS
LTIME TC
HID
FRP
TSR
FPS
NTSC/PAL
TAPE REV
PB CTL
L RES
H RES
TRP0
TRP1
TRP2
PFP0
PFP1
DRUM PG
DPG/SPA
FULL ERASE(X)
FULL ERASE(Y)
CAP FWD CTL
REEL FWD
CTL SW1
SERVO REQ
REEL M BRK
P.ON SW-REG
CAP FG B
CAP FG A
DEW SENSOR
GND
BATT DATA
BGN SENS
END SENS
TAPE LED
KEYA
TSR
PB CTL
DRUM FG
CAP X2FG
TUREEL FG
SPREEL FG
OPE CLK
OPE DATA
OP COVER
DPG/SPA
REC CTL+
REC CTL-
OPE LACH
MID
L RES
CAP FWD DET
REEL ERROR
FG A PWM
FG B PWM
CAP VS
DRUM ERROR
LED ANODE
P.ON SS
LOAD SW
END SENS
BEGIN SENS
LED ANODE
TAPE LED
BACK TALLY
M.MOTOR FWD(+)
M.MOTOR FWD(-)
TO MODE.MOTOR
TO FULL ERASE HEAD
TPS01
GND
IC601 SC78148GF-XXX
IC602 UPD71055GB-10
IC603 PLSC1235
IC604 TC74VHC573FT-X
IC605 SM74LV138APW-X
IC606 NM24C02EM8
IC607.1 TC7W126FU-X
IC607.2 TC7W126FU-X
IC608 TC7W74FU-X
IC609 TC7W74FU-X
IC610 TC7SH04FU-X
IC611 TC7SH14FU-X
IC612 TC4W53FU-X
IC613 TC7S86FU-X
IC614 TA75S01F-X
IC615 BA7043FS-X
IC616 TC4W53FU-X
IC617 TC7S14FU-X
IC618 M66312FP-M
IC619 TC7S14FU-X
IC620 MN1282I-QR-X
IC621 TC7S14FU-X
IC622 TC7S14FU-X
IC623 BA6285FP-X
IC624 TA75S01F-X
IC625 TC75H04FU-X
IC626 TC4W53FU-X
IC627 TA75S01F-X
IC628 TA75W01FU-X
IC629 TA75W01FU-X
Q601 DAN202U-X
Q602 MA738-X
Q603 DTC124EUA
Q604 DTC124EUA
Q605 2SC4081
Q606 DTA114EUA
Q607 DTC124EUA
Q608 2SC2873Y-X
Q609 DTC124EUA
Q610 2SC1623-L/K
Q611 DTC124EUA
D601 DAN202U-X
D602 MA3075M-X
D603 2SB1073/PQ-X
D604 DAN202U-X
D605 DAN202U-X
D606 MA3120M-X
D607 MA3075M-X
D608 DAN202U-X
D609 DAN202U-X
L601 NOR0181-001X
L602 150
SW3V
SW12V
SW5V
AL5V
SS5V
SS5V
SS

– SS/RFP BOARD SCHEMATIC DIAGRAM 6/6 –

✳ : Not mounted.

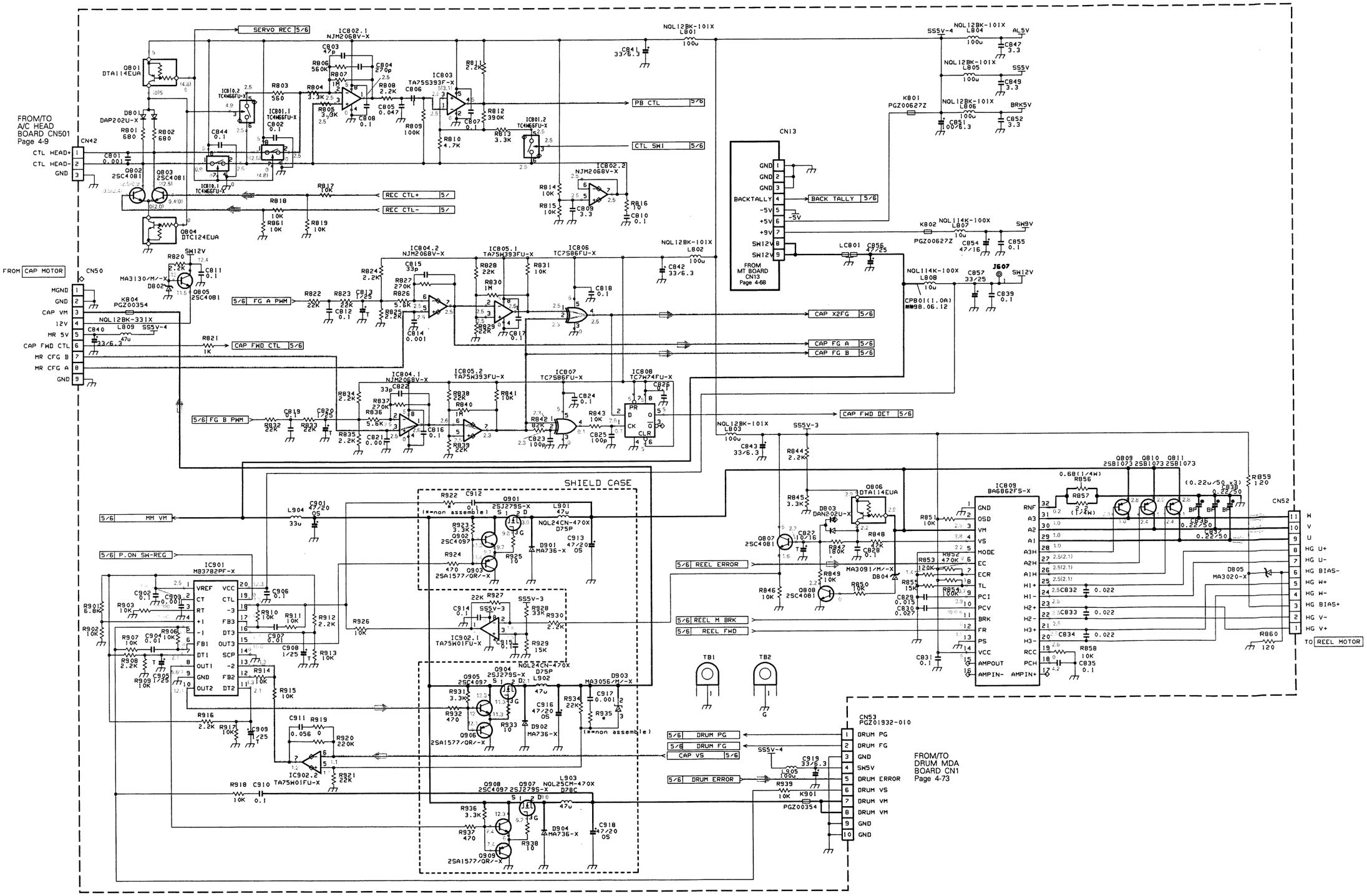

4.20 SS/RFP CIRCUIT BOARD

— SIDE A —

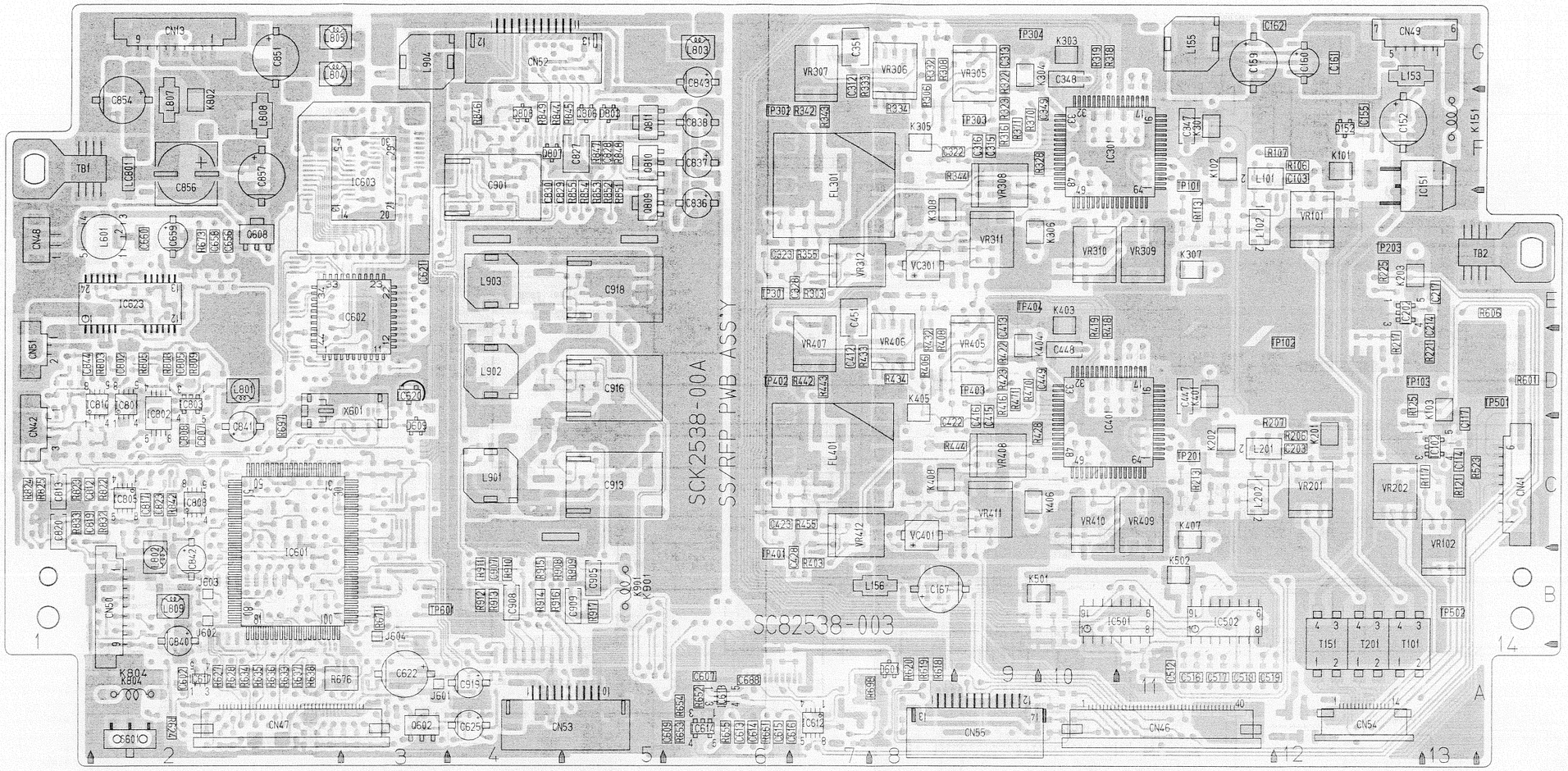

● **ADDRESS TABEL OF BOARD PARTS**

Each address may have an address error by one interval.

Side A-1C (Y axis / X axis)

IC101 B-12F	IC611 B-5C	IC902 B-5F	Q802 B-2D	D605 B-5A	R112 B-12E	R209 B-12C	R316 A-10F	R355 A-8E	R422 A-10D	R459 B-9C	R603 B-11A	R629 B-3A	R656 B-4C	R682 B-4B	R804 B-2D	R830 B-2C	R856 B-7F
IC102 A-14C	IC612 A-8A		Q803 B-2D	D606 B-2E	R113 A-12F	R210 B-12C	R318 A-11G	R356 B-8E	R423 A-10D	R460 B-9C	R604 B-11A	R630 B-3A	R657 B-3A	R683 B-4B	R805 A-2D	R831 B-3C	R857 B-7F
IC151 A-14F	IC613 A-8A	Q101 B-12F	Q804 B-2D	D607 B-4C	R114 B-11F	R211 B-12C	R319 A-11G	R357 B-9E	R424 B-10D	R461 B-10C	R605 B-11A	R631 B-3A	R658 B-8A	R684 B-4B	R806 B-2D	R832 A-2C	R858 B-6G
IC152 B-12G	IC614 A-7A	Q151 B-13F	Q805 B-2B	D608 B-3C	R115 B-12E	R212 B-12C	R320 B-11G	R358 B-8F	R425 B-9C	R462 B-9C	R606 A-14E	R632 B-4A	R659 B-8A	R685 B-3B	R807 B-3D	R833 A-2C	R859 B-6G
IC201 B-12C	IC615 B-8A	Q152 A-13G	Q806 A-6G	D609 A-5D	R116 B-14B	R213 A-12C	R322 A-10G	R359 B-9E	R428 A-10D	R463 B-9C	R607 B-3E	R633 A-4A	R660 B-8A	R686 B-3B	R808 A-3D	R834 B-2B	R860 B-6G
IC202 A-13G	IC616 B-5B	Q153 B-9B	Q807 A-6F	D801 B-2D	R117 A-14C	R214 B-11C	R323 A-10G	R360 B-9E	R431 B-9E	R464 B-10C	R608 B-3E	R634 A-3A	R661 A-8A	R687 B-3C	R809 A-3D	R835 B-2B	R861 B-2C
IC301 A-11F	IC617 A-3A	Q154 B-10B	Q808 A-6G	D802 B-3B	R118 B-14C	R215 B-12C	R324 B-10G	R361 B-10E	R432 A-9D	R465 B-8B	R609 B-2E	R635 A-4A	R662 B-4D	R688 B-4C	R810 B-3D	R836 B-2B	R901 B-6B
IC302 B-9G	IC618 B-4B	Q201 B-12C	Q809 A-7F	D803 A-7G	R119 B-14C	R216 B-13C	R325 B-9E	R362 B-9E	R433 A-9D	R470 A-10D	R610 B-2E	R636 A-4A	R663 B-5A	R689 B-3A	R811 B-3D	R837 B-2C	R902 B-6B
IC303 B-10E	IC619 B-4A	Q301 B-10G	Q810 A-7F	D804 B-6G	R120 B-13C	R217 A-13D	R328 A-10F	R363 B-9E	R434 A-9D	R471 A-10D	R611 B-3E	R637 A-4A	R664 B-5A	R690 B-4C	R812 B-3D	R838 B-2C	R903 B-6B
IC304 B-8E	IC620 A-5D	Q302 B-8E	Q811 A-7G	D805 B-6G	R121 A-14C	R218 B-13D	R331 B-9G	R364 B-10E	R435 B-8B	R501 B-11A	R612 B-2B	R638 A-4A	R665 B-5A	R693 B-3C	R813 B-3D	R839 B-2C	R906 B-6B
IC401 A-11D	IC621 B-5D	Q303 B-9F	Q901 B-6C	D901 B-7C	R122 B-14D	R219 B-13D	R332 A-9G	R365 B-8E	R436 B-9C	R502 B-12A	R613 B-4B	R639 B-4A	R666 B-4C	R694 B-3A	R814 B-3D	R840 B-2C	R907 B-6B
IC402 B-9D	IC622 B-4D	Q401 B-10D	Q902 B-6C	D902 B-7D	R123 B-14D	R220 B-13D	R333 A-9G	R370 A-10G	R437 B-10D	R503 B-10B	R614 B-10A	R640 B-4A	R667 B-5A	R695 B-4D	R815 B-2D	R841 B-3C	R908 A-6B
IC403 B-10C	IC623 A-2E	Q402 B-8C	Q903 B-6C	D903 B-5E	R124 B-13D	R221 A-14D	R334 A-9G	R371 A-10F	R438 B-9D	R507 B-10B	R615 B-10A	R641 B-4A	R668 B-5A	R696 B-3D	R816 B-3D	R842 A-3C	R909 A-6B
IC404 B-8B	IC624 B-3E	Q403 B-9D	Q904 B-6D	D904 B-7E	R125 A-13D	R222 B-14E	R335 B-8E	R403 A-8B	R439 B-8C	R508 B-10B	R616 B-9A	R642 B-4A	R669 B-2E	R697 A-4D	R817 B-2C	R843 B-3C	R910 A-6B
IC501 A-11B	IC625 B-4B	Q601 B-5A	Q905 B-6D		R151 B-13F	R223 B-13E	R336 B-9E	R404 B-10D	R440 B-8C	R515 B-11A	R617 B-10A	R643 B-4A	R670 B-4B	R698 A-9A	R818 B-2C	R844 A-6G	R911 A-5B
IC502 A-12B	IC801 A-2D	Q602 A-5A	Q906 B-6D	R101 B-13E	R159 B-9B	R224 B-13E	R337 B-10G	R405 B-10D	R441 B-9E	R517 B-11A	R618 A-9A	R644 B-4A	R671 A-5B	R699 B-4D	R819 B-2C	R845 A-6G	R912 A-5B
IC601 A-4B	IC802 A-3D	Q603 B-5A	Q907 B-6E	R102 B-13F	R163 B-13F	R225 A-13E	R338 B-9G	R406 A-9D	R442 A-8D	R519 B-12A	R619 A-9A	R645 B-4A	R672 B-4E	R701 B-4C	R820 B-2B	R846 A-5G	R913 A-6B
IC602 A-4E	IC803 A-3D	Q604 B-5A	Q908 B-6E	R103 B-13F	R165 B-9B	R303 A-8E	R339 B-8F	R407 B-10E	R443 A-8D	R520 B-12A	R620 A-9A	R646 B-4A	R673 A-3E	R702 B-5C	R821 B-2B	R847 A-6F	R914 A-6B
IC603 A-4F	IC804 B-2C	Q605 B-2E	Q909 B-6E	R104 B-13F	R201 B-13C	R304 B-10G	R340 B-8F	R408 A-9D	R444 A-10C	R521 B-12A	R621 B-9A	R647 B-4B	R674 B-6F	R703 B-4C	R822 A-2C	R848 A-7F	R915 A-6B
IC604 B-4F	IC805 A-2C	Q606 B-3E		R105 B-13F	R202 B-13C	R305 B-10G	R341 B-9G	R409 B-9E	R445 B-10C	R522 B-12A	R622 B-10A	R648 B-4A	R675 B-4B	R704 B-5C	R823 A-2C	R849 A-6G	R916 A-6B
IC605 B-5F	IC806 B-3C	Q607 B-3E	D301 B-9F	R106 A-12F	R203 B-13C	R306 A-9G	R342 A-8G	R414 B-11C	R452 B-11C	R523 A-14C	R623 B-3A	R649 B-4B	R676 A-4A	R705 B-5C	R824 A-2C	R850 B-6G	R917 A-6B
IC606 B-5B	IC807 B-3C	Q608 A-4E	D401 B-9D	R107 A-12F	R204 B-13C	R307 B-10G	R343 A-8G	R415 B-11D	R453 B-10C	R525 B-12A	R624 A-3A	R650 B-5A	R677 B-4C	R706 B-5D	R825 A-2C	R851 A-7F	R918 B-6B
IC607 B-4E	IC808 A-3C	Q609 B-3A	D601 A-9A	R108 B-12F	R205 B-13C	R308 A-9G	R344 A-10F	R416 A-10D	R455 A-8C	R528 B-12A	R625 B-3A	R652 A-7A	R678 B-5B	R707 B-5D	R826 B-2C	R852 A-7F	R919 B-5F
IC608 B-4E	IC809 B-7F	Q611 B-5D	D602 B-4A	R109 B-12E	R206 A-12D	R309 B-9G	R345 B-10F	R418 A-11E	R456 B-8C	R529 B-12A	R626 B-3A	R653 A-7A	R679 B-5B	R801 B-2D	R827 B-2C	R853 A-6F	R920 B-5F
IC609 B-4D	IC810 A-2D	Q612 B-4B	D603 B-5A	R110 B-12E	R207 A-12D	R314 B-11F	R352 B-11E	R419 A-11E	R457 B-9C	R601 A-14D	R627 A-3A	R654 A-7A	R680 B-3B	R802 B-2D	R828 B-2C	R854 A-6F	R921 B-6F
IC610 B-5F	IC901 B-6B	Q801 B-2D	D604 B-6A	R111 B-12F	R208 B-12C	R315 B-11G	R353 B-10E	R420 B-11D	R458 B-8C	R602 B-11A	R628 A-3A	R655 A-8A	R681 B-4B	R803 A-2D	R829 B-2C	R855 A-6F	R922 B-6C

4-50

— SIDE B —

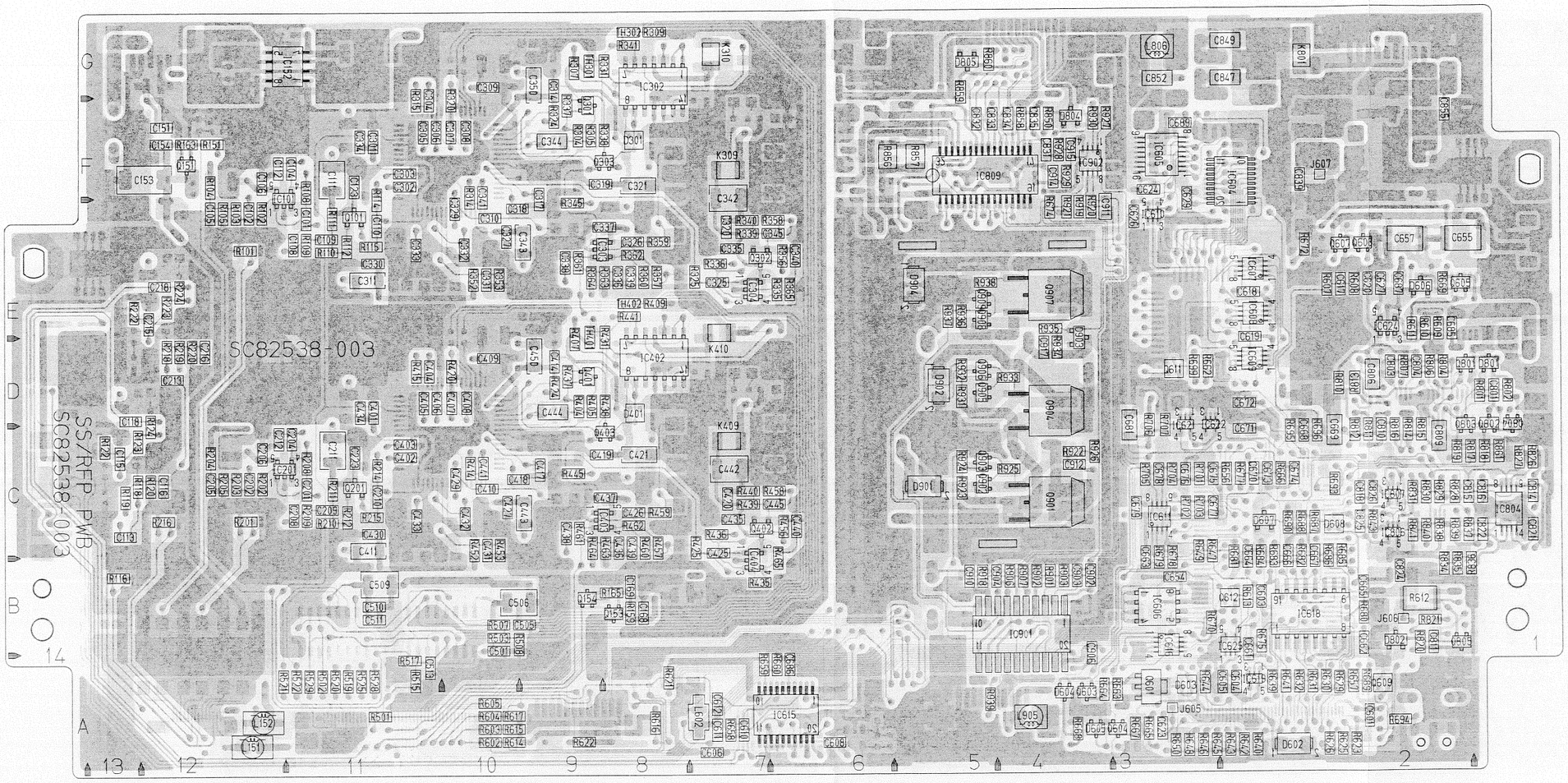

R923	B-6C	VR309	A-11E	C115	B-14C	C211	B-12D	C318	B-10F	C345	B-8F	C421	B-9C	C449	A-10D	C612	B-9A	C663	B-5B	C804	B-3D	C830	A-6F	C904	B-6B	L156	A-9B	J607	B-3F	K410	B-9E	LC801	A-2F
R924	B-6C	VR310	A-11E	C116	B-13C	C212	B-12D	C319	B-10F	C347	A-12G	C422	A-9D	C450	B-10D	C613	A-8A	C664	B-4B	C805	A-3D	C831	B-6F	C905	A-6B	L201	A-12C			K501	A-10B		
R925	B-6C	VR311	A-10E	C117	A-14D	C213	B-13D	C320	B-8F	C348	A-10G	C423	A-8C	C451	A-9E	C614	A-8A	C665	B-3B	C806	B-3D	C832	B-6G	C906	B-5B	L202	A-12C	K101	A-13F	K502	A-11B	CN13	A-3G
R926	B-5C	VR312	A-9E	C118	B-14D	C214	A-14E	C321	B-9F	C349	A-10G	C425	B-9C	C501	B-10B	C615	A-8A	C666	B-4B	C807	A-3D	C833	B-6G	C907	A-6B	L601	A-2E	K102	A-12F	K801	B-4G	CN41	A-14C
R927	B-5G	VR405	A-10D	C123	B-12F	C215	B-13E	C322	A-9F	C350	B-10G	C426	B-9C	C505	B-10B	C616	A-8A	C667	B-3B	C808	A-3D	C834	B-6G	C908	A-6B	L602	B-9A	K103	A-14D	K802	A-3G	CN42	A-2D
R928	B-6F	VR406	A-9D	C151	B-13G	C216	B-13D	C323	A-8E	C351	A-9G	C427	B-10C	C506	B-10B	C617	B-3E	C668	B-4D	C809	B-2D	C835	B-6G	C909	A-6B	L801	A-3D	K151	A-14G	K804	A-2A	CN46	A-11A
R929	B-6F	VR407	A-8D	C152	A-13G	C217	A-14E	C325	B-9E	C401	B-12D	C428	A-8B	C509	B-11B	C618	B-4E	C669	B-3D	C810	B-3D	C836	A-7F	C910	B-6B	L802	A-3B	K201	A-13D	K901	A-7B	CN47	A-4A
R930	B-5G	VR408	A-10C	C153	B-14F	C218	B-13E	C326	B-9E	C402	B-11C	C429	B-11C	C510	B-12B	C619	B-4E	C670	B-4C	C811	B-2B	C837	A-7F	C911	B-5F	L803	A-7G	K202	A-12D			CN48	A-2E
R931	B-6D	VR409	A-11C	C154	B-13F	C223	B-12C	C327	B-10F	C403	B-11D	C430	B-12C	C511	B-12B	C620	B-3E	C671	B-4D	C812	A-2C	C838	A-7G	C912	B-6C	L804	A-4G	K203	A-13E	S601	A-2A	CN49	A-13G
R932	B-6D	VR410	A-11C	C155	A-13G	C301	B-12F	C328	A-8E	C404	B-11D	C431	B-11C	C512	A-11A	C621	A-5E	C672	B-4D	C813	A-2C	C839	B-4F	C913	A-7C	L805	A-4G	K301	A-12G			CN50	A-2B
R933	B-6D	VR411	A-10C	C159	A-12G	C302	B-11F	C329	B-11F	C405	B-11D	C432	B-11C	C513	B-11A	C622	A-5A	C673	B-4C	C814	B-2C	C840	A-3B	C914	B-6F	L806	B-5G	K303	A-10G	T101	A-13B	CN51	A-2D
R934	B-6D	VR412	A-9C	C160	A-13G	C303	B-11F	C330	B-12E	C406	B-11D	C433	B-11C	C516	A-12A	C623	B-5A	C674	B-4C	C815	B-2C	C841	A-3D	C915	B-6F	L807	A-3G	K304	A-10G	T151	A-13B	CN52	A-6G
R935	B-6E			C161	A-13G	C304	B-11G	C331	B-11E	C407	B-11D	C434	B-12D	C517	A-12A	C624	B-5F	C675	B-4C	C816	B-2C	C842	A-3B	C916	A-7D	L808	A-4G	K305	A-9F	T201	A-13B	CN53	A-6A
R936	B-6E	C101	B-12F	C162	A-12G	C305	B-11G	C332	B-11E	C408	B-11D	C435	B-8C	C518	A-12A	C625	A-5A	C676	B-5C	C817	A-3C	C843	A-7G	C917	B-6D	L809	A-3B	K306	A-10F			CN54	A-13A
R937	B-7E	C102	B-13F	C167	A-9B	C306	B-11G	C333	B-11E	C409	B-11D	C436	B-9C	C519	A-12A	C626	B-5F	C677	B-4C	C818	B-3C	C844	A-2D	C918	A-7E	L901	A-6C	K307	A-12E	FL301	A-8F	CN55	A-10A
R938	B-6E	C103	A-12F	C168	B-9B	C307	B-11G	C334	B-12F	C410	B-11C	C437	B-9C	C601	B-3A	C627	B-3E	C678	B-5C	C819	A-2C	C847	B-4G	C919	A-5A	L902	A-6D	K308	A-9F	FL401	A-8C		
R939	B-6A	C104	B-12F	C169	B-9B	C308	B-11G	C335	B-8E	C411	B-12C	C438	B-10C	C602	A-3A	C629	B-4F	C679	B-5C	C820	A-2C	C849	B-4G			L903	A-6E	K309	B-8F				
		C105	B-13F	C201	B-12C	C309	B-11G	C336	B-9E	C412	A-9D	C439	B-9C	C603	B-4B	C654	B-5B	C681	B-5D	C821	B-2C	C851	A-4G	VC301	A-9E	L904	A-5G	K310	B-9G	TH301	B-10G		
VR101	A-13F	C106	B-13F	C202	B-13C	C310	B-11F	C337	B-9F	C413	A-10E	C440	B-8C	C604	B-4A	C655	B-2E	C685	B-2E	C822	B-2C	C852	B-5G	VC401	A-9C	L905	B-6A	K401	A-12D	TH302	B-9G		
VR102	A-14B	C108	B-12E	C203	A-12C	C311	B-12E	C338	B-10E	C414	B-10D	C441	B-11C	C605	B-4A	C656	A-3E	C686	B-8A	C823	A-3C	C854	A-2G					K403	A-10E	TH401	B-10E		
VR201	A-13C	C109	B-12F	C204	B-12D	C312	A-9G	C339	B-9E	C415	A-10D	C442	B-8C	C606	B-9A	C657	B-3E	C687	B-3E	C824	B-3B	C855	B-2G	L101	A-12F	J601	A-5A	K404	A-10D	TH402	B-9E		
VR202	A-13C	C110	B-11F	C205	B-13C	C313	A-10G	C340	B-8E	C416	A-10D	C443	B-10C	C607	A-7A	C658	A-3E	C688	A-8A	C825	B-3C	C856	A-3F	L102	A-12F	J602	A-3B	K405	A-9D				
VR305	A-10G	C111	B-12F	C206	B-13C	C314	B-10G	C341	B-11F	C417	B-10C	C444	B-10D	C608	B-8A	C659	A-3E	C689	B-5G	C826	B-3C	C857	A-4F	L151	B-13A	J603	A-3B	K406	A-10C	TB1	A-2F		
VR306	A-9G	C112	B-12F	C208	B-12C	C315	A-10F	C342	B-8F	C418	B-10C	C445	B-8C	C609	A-7A	C660	A-2E	C801	B-2D	C827	A-6F	C901	A-6F	L152	B-13A	J604	A-5B	K407	A-12C	TB2	A-15E		
VR307	A-8G	C113	B-14C	C209	B-12C	C316	A-10F	C343	B-10E	C419	B-10C	C447	A-12D	C610	B-8A	C661	B-4B	C802	A-2D	C828	A-7F	C902	B-5B	L153	A-13G	J605	B-5A	K408	A-9C				
VR308	A-10F	C114	A-14C	C210	B-11C	C317	B-10F	C344	B-10F	C420	B-8C	C448	A-10D	C611	B-9A	C662	B-3B	C803	B-3D	C829	A-6F	C903	B-5B	L155	A-12G	J606	B-3B	K409	B-8D	X601	A-4D		

4-51

— INNER PATTERN (SIDE A) —

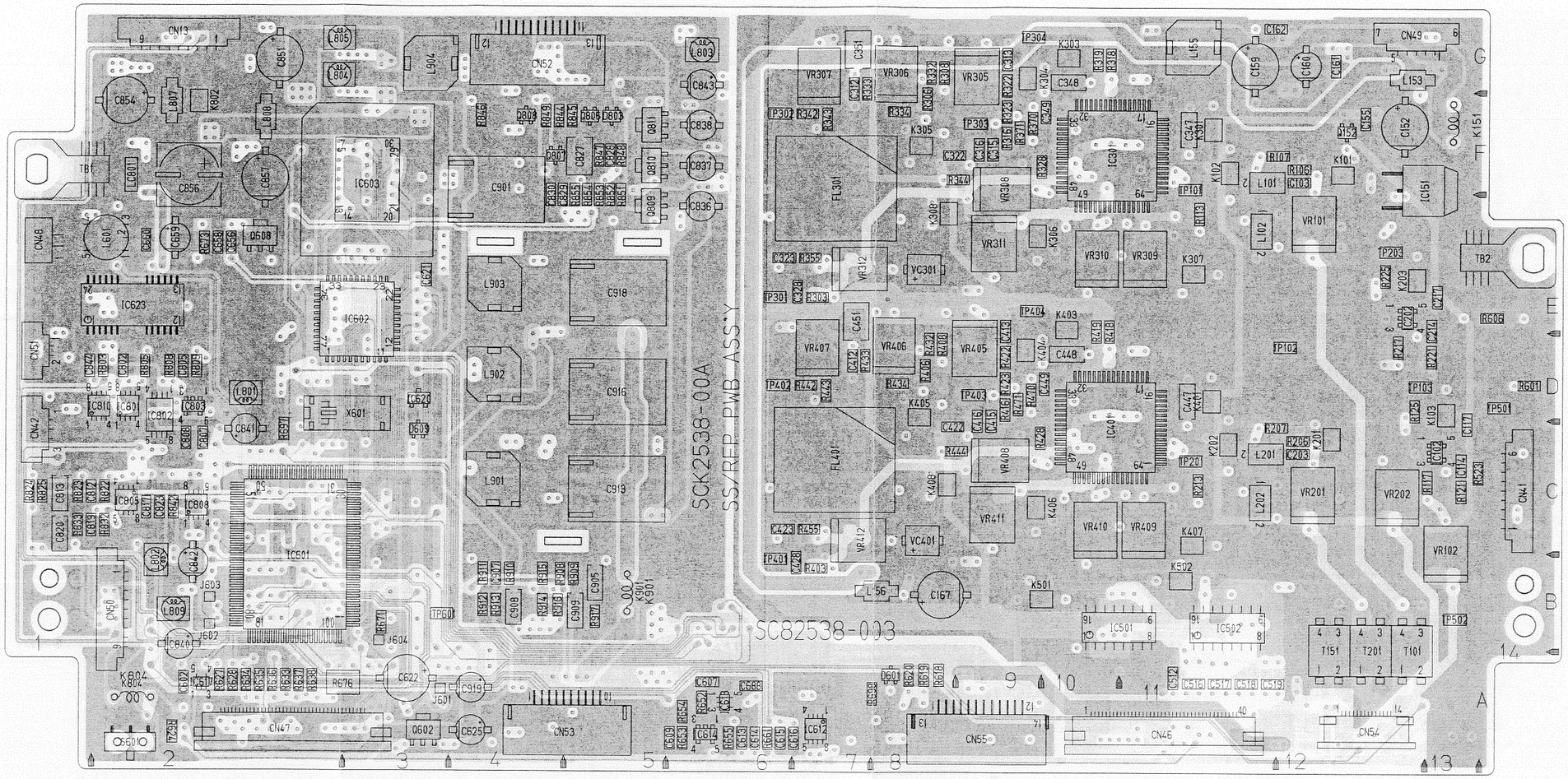

4-52

— INNER PATTERN (SIDE B) —

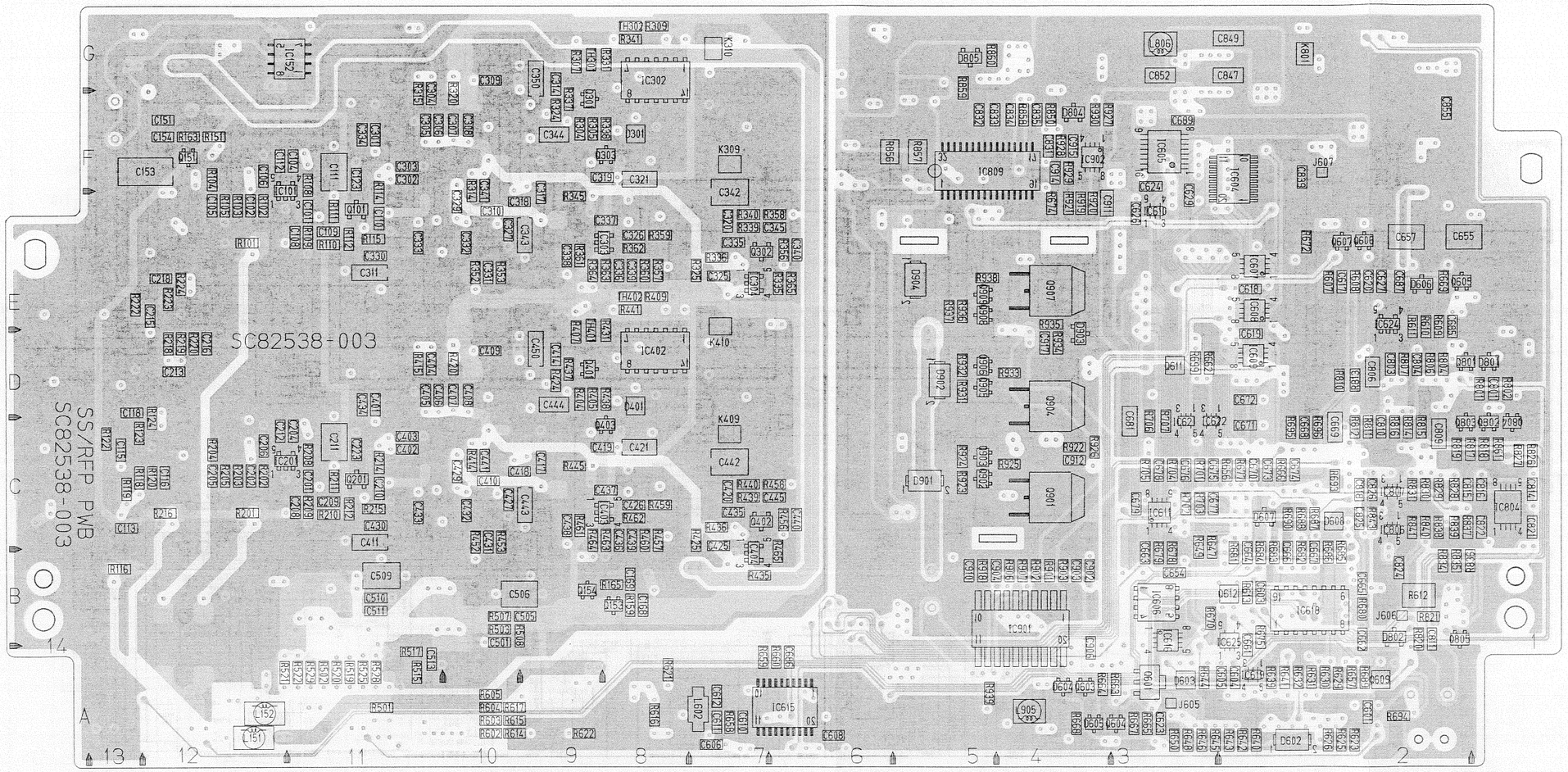

4.21 AUDIO & LCD BOARD SCHEMATIC DIAGRAM 08

– AUDIO & LCD BOARD SCHEMATIC DIAGRAM 1/5 (ONLY FOR DY-90U) –

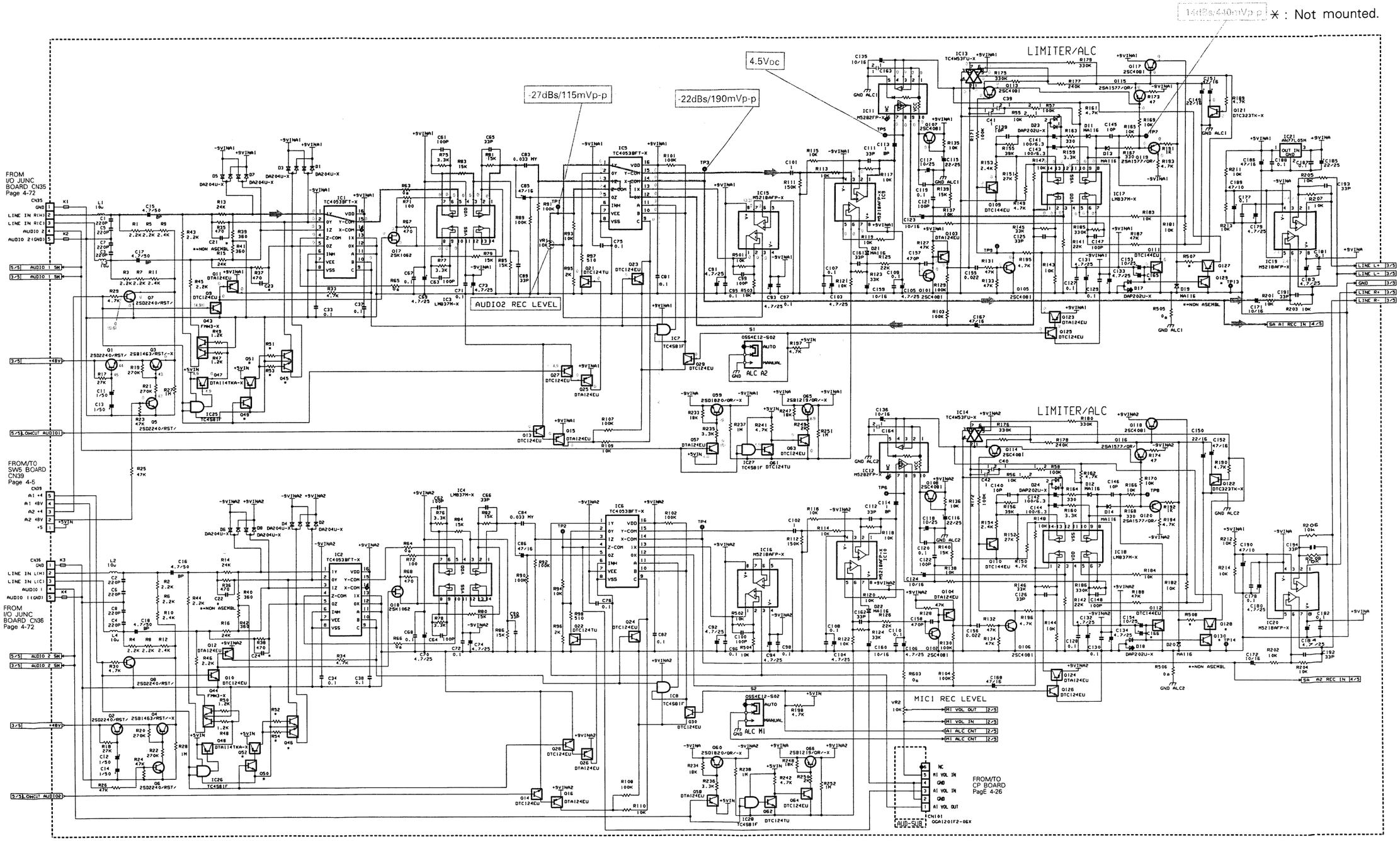

– AUDIO & LCD BOARD SCHEMATIC DIAGRAM 1/5 (FOR JAPANESE MODEL/PAL MODEL) –

✳ : Not mounted.

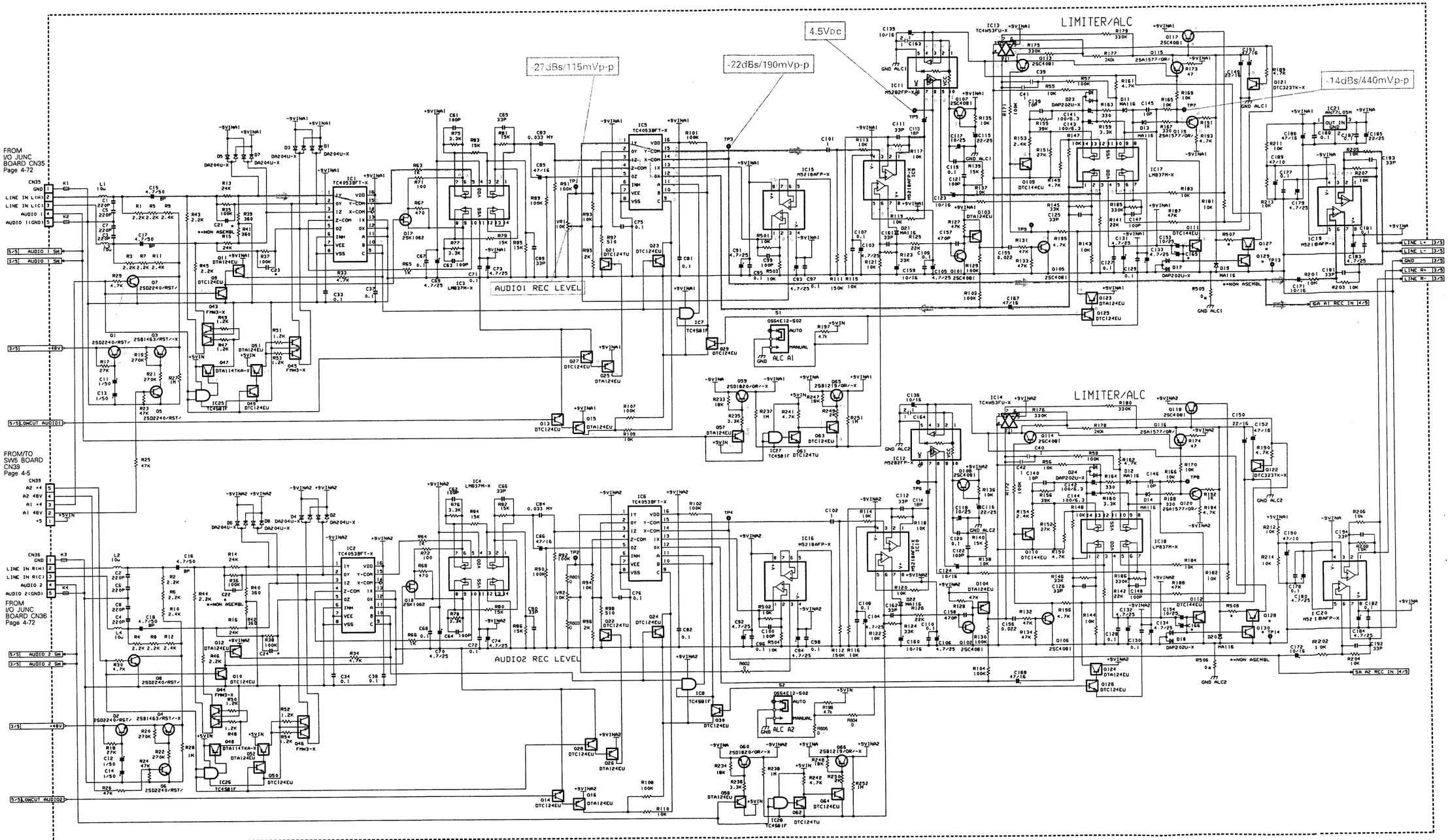

– AUDIO & LCD BOARD SCHEMATIC DIAGRAM 2/5 (ONLY FOR DY-90U) –

✳ : Not mounted.

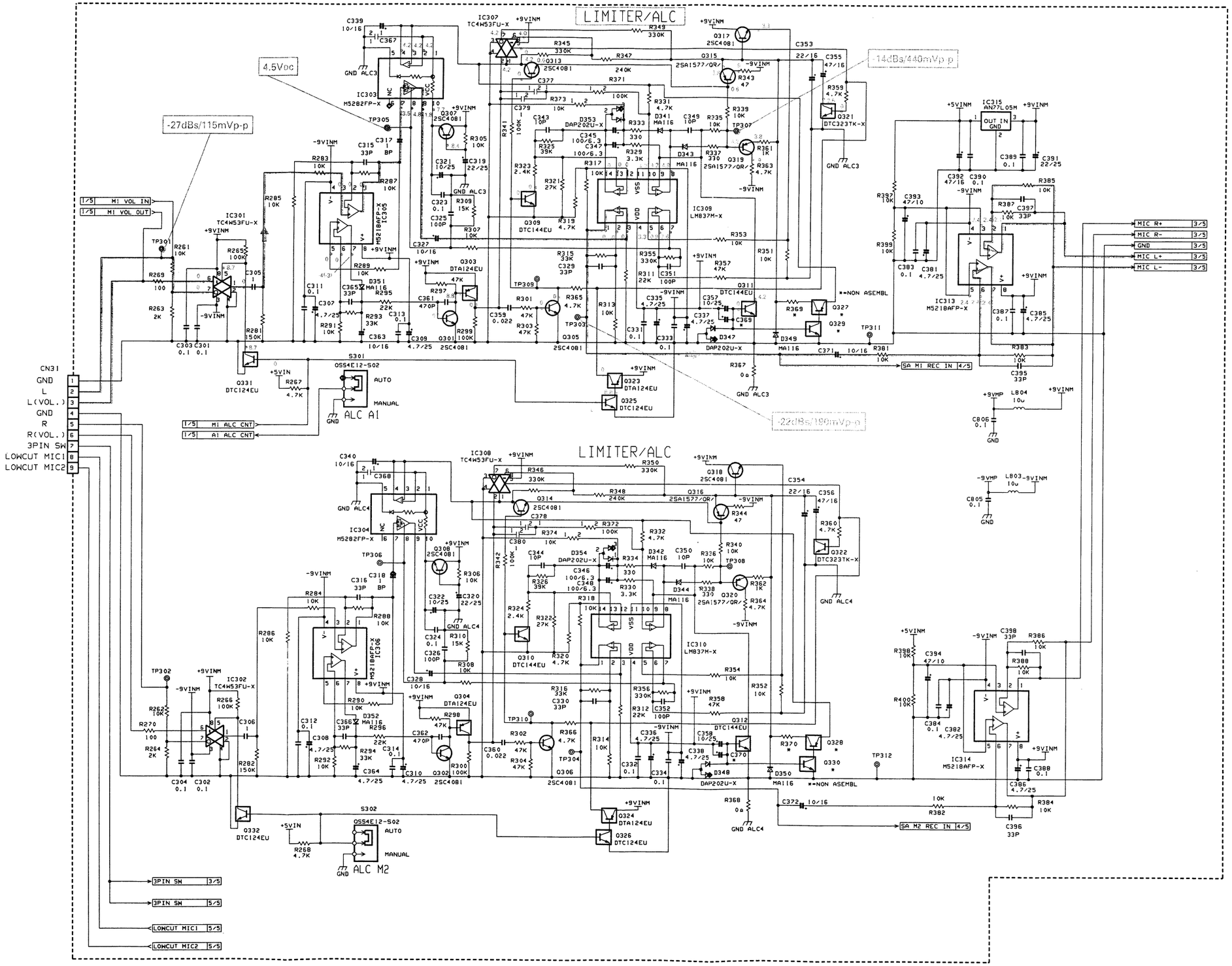

– AUDIO & LCD BOARD SCHEMATIC DIAGRAM 2/5 (FOR JAPANESE MODEL/PAL MODEL) –

✳ : Not mounted.

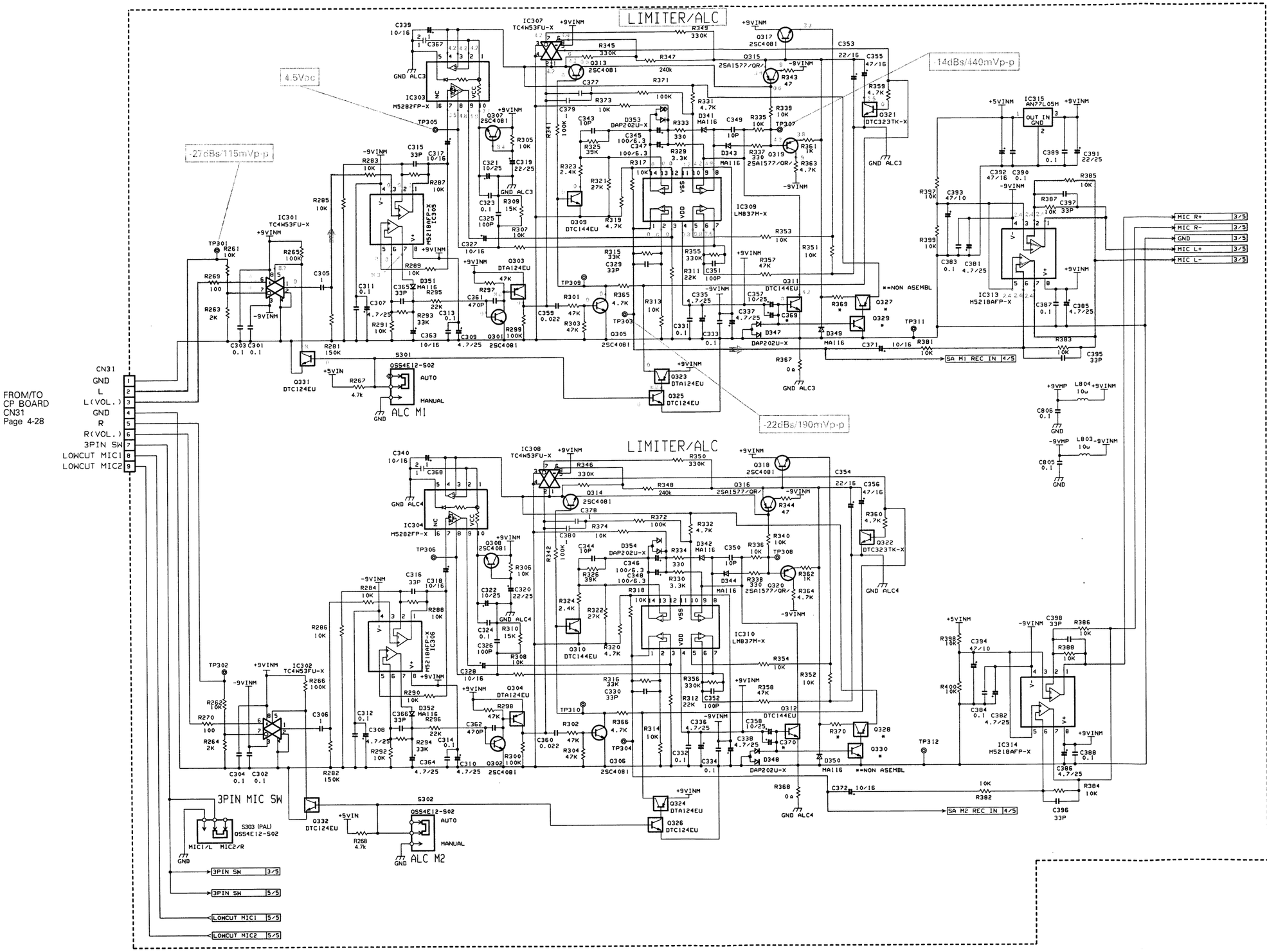

4-57

– AUDIO & LCD BOARD SCHEMATIC DIAGRAM 3/5 –

✳ : Not mounted.

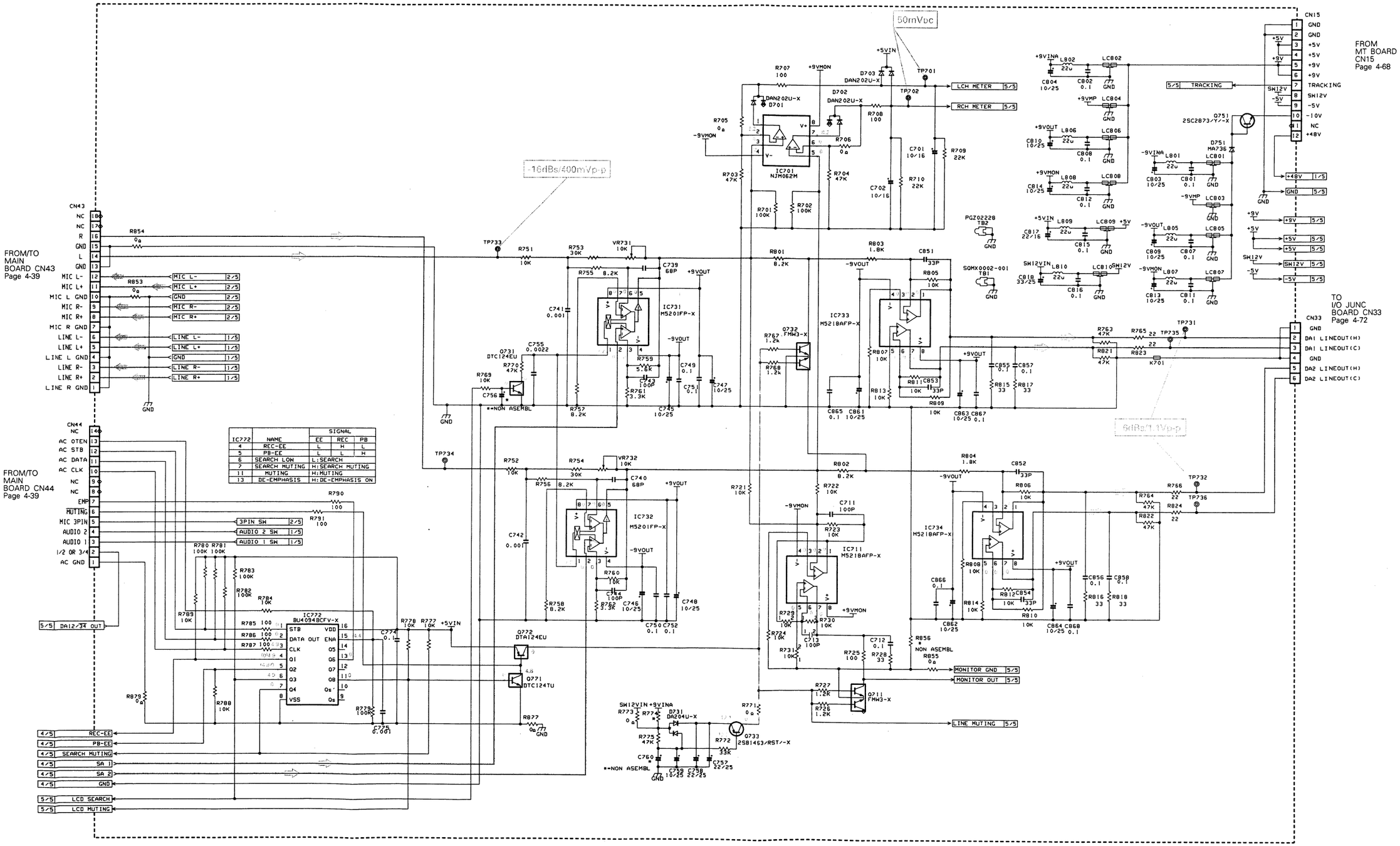

– AUDIO & LCD BOARD SCHEMATIC DIAGRAM 4/5 –

✳ : Not mounted.

29DBs/90mVp-p

13.8Vp-p/104kHz

-9dBs/350mVp-p

[REC]
7.1Vp-p/104kHz

[REC]
62.5Vp-p/104kHz

FROM/TO
A/C HEAD
BOARD CN501
Page 4-9

– AUDIO & LCD BOARD SCHEMATIC DIAGRAM 5/5 –

✳ : Not mounted.

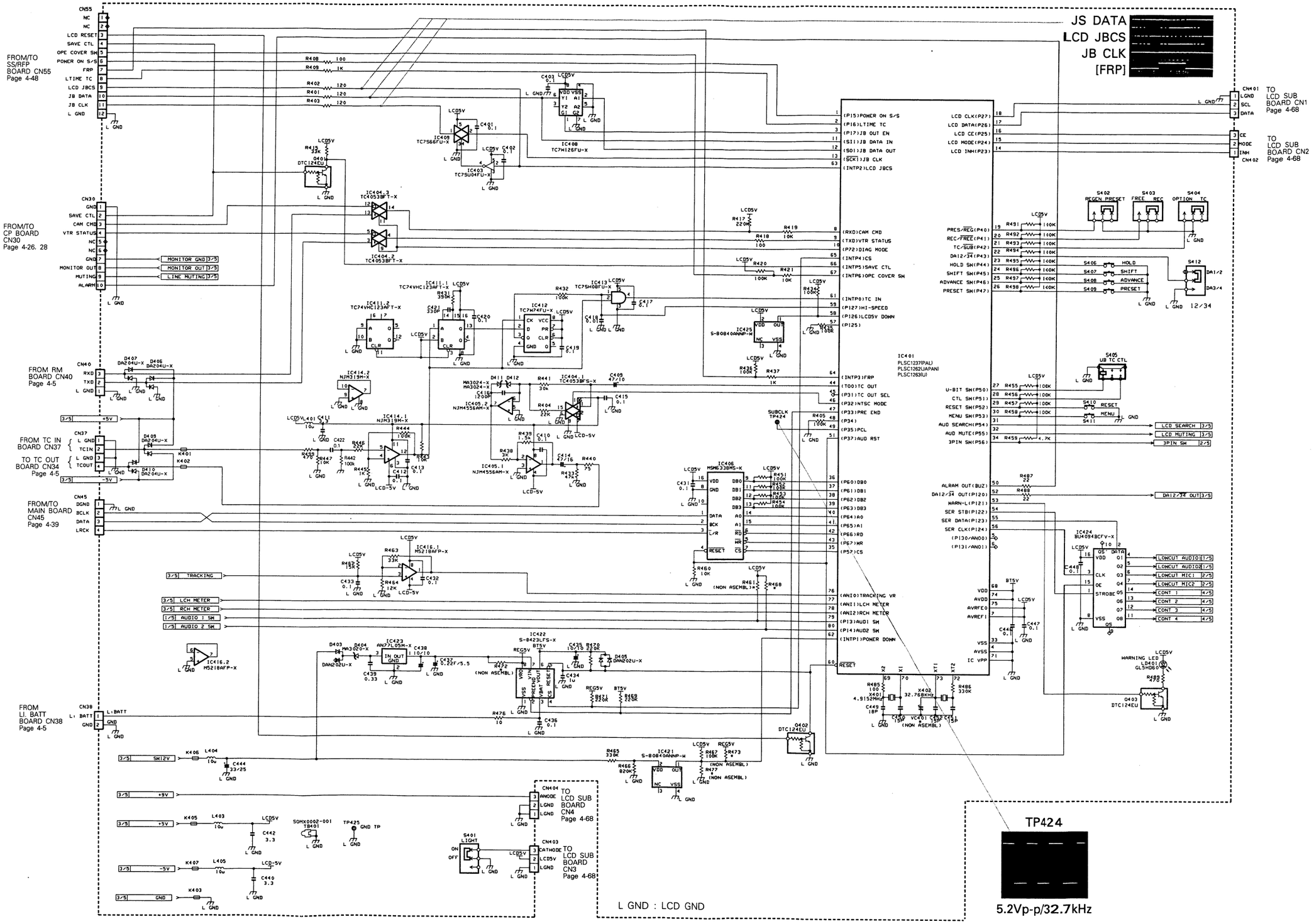

TP424

5.2Vp-p/32.7kHz

4.22A AUDIO & LCD CIRCUIT BOARD

– SIDE A –

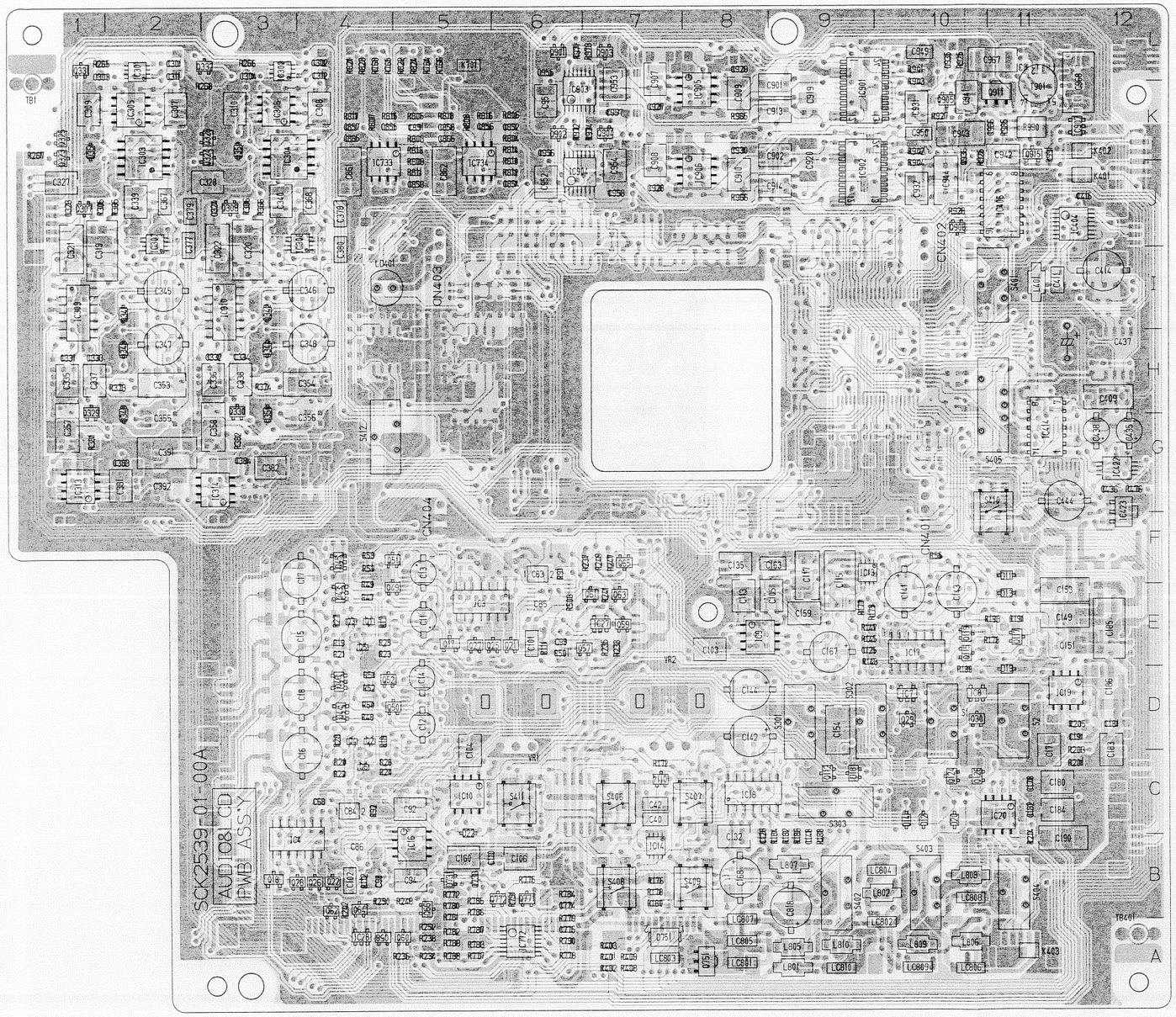

● **ADDRESS TABEL OF BOARD PARTS**
Each address may have an address error by one interval.

Side — A-1C — Y axis / X axis

IC1	B-4E	Q16	B-5C	Q323	A-1J	R6	B-4C	R107	B-6F	R194	B-9C	R325	B-1I	R444	B-11G
IC2	B-4D	Q17	A-5E	Q324	A-3J	R7	B-4F	R108	B-5C	R195	B-9E	R326	B-3I	R445	B-11G
IC3	A-6E	Q18	A-3B	Q325	A-1K	R8	B-4D	R109	B-6F	R196	B-7C	R329	B-2I	R446	B-12H
IC4	A-4B	Q21	A-6E	Q326	A-3K	R9	B-4E	R110	B-4C	R197	B-10D	R330	B-4I	R447	B-11H
IC5	B-6E	Q22	A-4B	Q327	B-1H	R10	B-4C	R111	A-6E	R198	B-11D	R331	B-1I	R451	B-11J
IC6	B-4B	Q23	B-6F	Q328	B-3H	R11	B-4F	R112	A-4B	R201	A-12C	R332	B-3I	R452	B-11J
IC7	A-10D	Q24	B-4C	Q329	A-1G	R12	B-4D	R113	B-8E	R202	B-11B	R333	B-2I	R453	B-11J
IC8	A-11D	Q25	A-6E	Q330	A-3G	R13	B-4E	R114	B-5C	R203	A-12D	R334	B-4I	R454	B-11J
IC9	A-8E	Q26	A-4B	Q331	A-1K	R14	B-4C	R115	B-8E	R204	B-11C	R335	B-2I	R455	B-10J
IC10	A-5C	Q27	A-5E	Q332	A-3L	R15	B-4F	R116	B-5C	R205	A-12D	R336	B-4I	R456	B-10J
IC11	B-8E	Q28	A-3B	Q401	B-10G	R16	B-4D	R117	B-8E	R206	B-11C	R337	B-2H	R457	B-10I
IC12	B-7C	Q29	A-10D	Q402	B-10H	R17	B-4E	R118	B-5C	R207	B-12D	R338	B-4H	R458	B-10I
IC13	A-9F	Q30	A-11D	Q403	B-9I	R18	B-4D	R119	B-8E	R208	B-11C	R339	B-2H	R459	B-10I
IC14	A-7B	Q43	A-4E	Q711	B-6I	R19	B-4E	R120	B-5C	R211	B-12D	R340	B-4H	R460	B-11J
IC15	B-7E	Q44	A-4D	Q731	B-5G	R20	A-4C	R121	B-8E	R212	B-11C	R341	B-2I	R461	B-9H
IC16	A-5C	Q45	A-4F	Q732	B-5I	R21	B-4E	R122	B-5C	R213	B-12D	R342	B-3I	R462	B-9F
IC17	A-10E	Q46	A-4D	Q733	A-5B	R22	A-4C	R123	B-8E	R214	A-11B	R343	B-2I	R463	B-9G
IC18	A-8C	Q47	B-5E	Q751	A-8A	R23	B-4E	R124	B-5C	R233	A-7E	R344	B-4I	R464	B-9F
IC19	A-12D	Q48	B-5D	Q771	A-6B	R24	A-4C	R125	B-9E	R234	A-5A	R345	B-2J	R465	B-11F
IC20	A-11C	Q49	A-5E	Q772	A-6B	R25	A-4E	R126	B-6C	R235	A-7E	R346	B-4J	R466	B-11F
IC21	B-12D	Q50	A-5D	Q901	A-6L	R26	A-4C	R127	B-9E	R236	A-5A	R347	B-2I	R467	B-11F
IC25	B-5E	Q51	A-5F	Q902	A-6K	R27	A-4E	R128	B-6C	R237	A-7F	R348	B-4I	R468	B-9H
IC26	B-5D	Q52	A-4D	Q903	A-7L	R28	A-4D	R129	B-9E	R238	A-5A	R349	B-2I	R469	B-12G
IC27	A-7E	Q57	A-6E	Q904	A-7K	R29	B-5E	R130	B-6C	R241	A-7E	R350	B-4I	R470	B-12G
IC28	A-4A	Q58	A-4A	Q905	A-10K	R30	B-5D	R131	B-9E	R242	A-4B	R351	B-1H	R471	B-12G
IC301	A-2K	Q59	A-7E	Q906	A-10J	R33	B-5F	R132	B-6C	R247	A-7F	R352	B-2H	R472	B-12G
IC302	A-3K	Q60	A-5A	Q911	A-11K	R34	B-5D	R133	B-9E	R248	A-5B	R353	B-1H	R473	B-11F
IC303	A-2J	Q61	A-7E	Q912	B-11L	R35	B-4E	R134	B-7C	R249	A-7F	R354	B-2H	R476	A-12G
IC304	A-3J	Q62	A-4B	Q913	B-12K	R36	B-4D	R135	B-9F	R250	A-4B	R355	B-1H	R477	B-11F
IC305	A-2K	Q63	A-7E	Q914	B-12L	R37	B-4F	R136	B-7C	R251	B-7E	R356	B-3H	R485	B-10G
IC306	A-3K	Q64	A-4B	Q915	A-11J	R38	B-4D	R137	B-9F	R252	A-5A	R357	B-1H	R486	B-9G
IC307	A-2I	Q65	A-7F			R39	B-4E	R138	B-7C	R261	B-2K	R358	B-3H	R487	B-10H
IC308	A-4I	Q66	A-5B	D1	B-4E	R40	B-4C	R139	B-9F	R262	B-3K	R359	B-2G	R488	B-10H
IC309	A-1I	Q101	B-9E	D2	B-4C	R41	B-4E	R140	B-7C	R263	B-2K	R360	B-4G	R489	B-9J
IC310	A-3I	Q102	B-6C	D3	B-4E	R42	B-4D	R141	B-10E	R264	B-3K	R361	B-2H	R491	B-9I
IC313	A-1F	Q103	B-9E	D4	B-4D	R43	B-4E	R142	B-6C	R265	A-1L	R362	B-4H	R492	B-9I
IC314	A-3F	Q104	B-6C	D5	B-4E	R44	B-4D	R143	A-9E	R266	A-3L	R363	B-2H	R493	B-9J
IC315	B-2G	Q105	B-9E	D6	B-4D	R45	B-4F	R144	B-8B	R267	A-1J	R364	B-4H	R494	B-9J
IC401	B-10H	Q106	B-7C	D7	B-4E	R46	B-4D	R145	A-9E	R268	A-3K	R365	A-2J	R495	B-9J
IC403	B-8F	Q107	B-9F	D8	B-4C	R47	A-4E	R146	B-8C	R269	B-2L	R366	A-3J	R496	B-9J
IC404	A-12J	Q108	B-7C	D11	A-11F	R48	A-4D	R147	A-9E	R270	B-3L	R367	B-1G	R497	B-9I
IC405	B-12H	Q109	B-10F	D12	A-10C	R49	A-4E	R148	B-8C	R281	B-2K	R368	B-3G	R498	B-9I
IC406	A-11J	Q110	B-8C	D13	A-11E	R50	A-4D	R149	B-10E	R282	B-3K	R369	B-2H	R499	B-11H
IC408	B-9I	Q111	B-11E	D14	A-10C	R51	A-4F	R150	B-8C	R283	B-2K	R370	B-4H	R501	A-6E
IC409	B-7F	Q112	A-9C	D17	B-11E	R52	A-4D	R151	B-10E	R284	B-4K	R371	B-1I	R502	B-5B
IC411	B-11G	Q113	B-10E	D18	A-9C	R53	A-4F	R152	B-8C	R285	B-2K	R372	B-3I	R503	A-6E
IC412	B-11G	Q114	A-7C	D19	A-11D	R54	A-4D	R153	B-10F	R286	B-4K	R373	A-2H	R504	B-5B
IC413	B-11G	Q115	A-10E	D20	A-10C	R55	A-10F	R154	B-8C	R287	B-2K	R374	A-3H	R505	B-10D
IC414	A-11G	Q116	B-8B	D21	B-9E	R56	B-8D	R155	B-10E	R288	B-3K	R381	A-1G	R506	B-10C
IC416	B-8F	Q117	A-11E	D22	A-5C	R57	B-10E	R156	B-8C	R289	B-2K	R382	A-3G	R507	B-11E
IC421	B-10F	Q118	B-8B	D23	B-10F	R58	B-8C	R159	B-10F	R290	B-3K	R383	B-1G	R508	B-10C
IC422	A-12G	Q119	A-10E	D24	B-8D	R63	B-4F	R160	B-8D	R291	B-2K	R384	B-3G	R601	B-7D
IC423	A-12F	Q120	B-9C	D341	A-2I	R64	B-4D	R161	B-10E	R292	B-3K	R385	B-1G	R602	B-7D
IC424	B-11H	Q121	B-11D	D342	A-3I	R65	B-4F	R162	B-8C	R293	B-1K	R386	B-3G	R603	B-7D
IC425	B-11H	Q122	B-7B	D343	A-2H	R66	B-4D	R163	B-10F	R294	B-3K	R387	B-1G	R604	B-11C
IC701	B-7I	Q123	B-9E	D344	A-3H	R67	B-5E	R164	B-9C	R295	B-2K	R388	B-3G	R605	B-6F
IC711	B-7I	Q124	A-10C	D347	B-1H	R68	B-3B	R165	B-10E	R296	B-3K	R397	B-2G	R701	B-7I
IC731	B-5H	Q125	B-10D	D348	B-3H	R71	B-5E	R166	B-8C	R297	B-2K	R398	B-3G	R702	B-7J
IC732	B-6H	Q126	A-11C	D349	A-2G	R72	B-3B	R167	B-10E	R298	B-4K	R399	B-2G	R703	B-8I
IC733	A-5J	Q127	B-11E	D350	A-3G	R75	B-5E	R168	B-9C	R299	B-2J	R400	B-3G	R704	B-8I
IC734	A-6J	Q128	B-10C	D351	A-1K	R76	B-3C	R169	B-10E	R300	B-4J	R401	A-7A	R705	B-8I
IC772	A-6A	Q129	B-11E	D352	A-3K	R77	B-5E	R170	B-8C	R301	B-2J	R402	A-7A	R706	B-8J
IC901	A-9L	Q130	B-9C	D353	B-2H	R78	B-3B	R171	B-10F	R302	B-4J	R403	A-7A	R707	B-8I
IC902	A-9K	Q301	B-2K	D354	B-3H	R79	B-5E	R172	A-7C	R303	B-2J	R404	B-12I	R708	B-8J
IC903	A-6K	Q302	B-4K	D403	B-12F	R80	B-3B	R173	A-11E	R304	B-3J	R405	B-10H	R709	B-8I
IC904	A-6J	Q303	B-2J	D404	B-12F	R81	B-6E	R174	B-8C	R305	A-1J	R408	A-7A	R710	B-8I
IC905	A-8K	Q304	B-4J	D405	B-12G	R82	B-4C	R175	B-10E	R306	A-3J	R409	A-7A	R721	B-7I
IC906	A-8J	Q305	B-2J	D406	B-12I	R83	B-5F	R176	A-7B	R307	B-2I	R415	B-10G	R722	B-7J
IC907	A-12K	Q306	B-3J	D407	B-11I	R84	B-3B	R177	A-9E	R308	B-3I	R417	B-9H	R723	B-6I
		Q307	A-1J	D409	B-11J	R85	B-5E	R178	A-7B	R309	B-2J	R418	B-9H	R724	B-6J
Q1	A-4E	Q308	A-3J	D410	B-11J	R86	B-4C	R179	A-9E	R310	B-3J	R419	B-9H	R725	B-6J
Q2	A-4D	Q309	B-2I	D411	B-12H	R89	B-6E	R180	A-7B	R311	B-1I	R420	B-10G	R726	B-6I
Q3	A-4E	Q310	B-3I	D412	B-12G	R90	B-4B	R181	B-10E	R312	B-3I	R421	B-10G	R727	B-6I
Q4	A-4D	Q311	B-1H	D701	B-7I	R91	B-6F	R182	A-9B	R313	B-1I	R431	B-11G	R728	B-6J
Q5	A-4E	Q312	B-3H	D702	B-7J	R92	A-4C	R183	B-10E	R314	B-3I	R432	B-11G	R729	B-6J
Q6	A-4C	Q313	B-2J	D703	B-9I	R93	B-6E	R184	A-8B	R315	B-1I	R433	B-12I	R730	B-7J
Q7	B-5E	Q314	B-3J	D731	A-5B	R94	B-4B	R185	B-10E	R316	B-3I	R434	B-10H	R731	B-6J
Q8	B-5D	Q315	B-2I	D751	A-7A	R95	B-6E	R186	A-9B	R317	B-1I	R435	B-10H	R751	B-5J
Q9	B-5E	Q316	B-4I	D901	B-12K	R96	B-4B	R187	B-11E	R318	B-3I	R436	B-10G	R752	B-6J
Q10	B-5D	Q317	B-2I			R97	B-6E	R188	A-9B	R319	B-1I	R437	B-10G	R753	B-5J
Q11	B-5F	Q318	B-4I	R1	B-3E	R98	B-4B	R189	A-10D	R320	B-3I	R438	B-12H	R754	B-6J
Q12	B-5D	Q319	B-2H	R2	B-3C	R101	B-6F	R190	B-7B	R321	B-1I	R439	B-12I	R755	B-4I
Q13	B-7F	Q320	B-4H	R3	B-3F	R102	B-4C	R191	A-11E	R322	B-3I	R440	B-12I	R756	B-5I
Q14	B-5C	Q321	B-2G	R4	B-3D	R103	B-9E	R192	B-9C	R323	B-2I	R441	B-12H	R757	B-5I
Q15	B-7F	Q322	B-4G	R5	B-4E	R104	B-8B	R193	A-11E	R324	B-3I	R443	B-11G	R758	B-6I

4-61-1

R759	B-4H	R932	B-10J	C74	B-4B	C167	A-9E	C366	B-3K	C757	B-6B	C946	B-10J	TP902	B-10K
R760	B-5H	R933	B-10K	C75	B-6F	C168	A-8B	C367	A-2J	C758	B-5B	C947	B-9L	TP903	B-8K
R761	B-4H	R934	B-10J	C76	B-4C	C171	A-11D	C368	A-4J	C759	B-6B	C948	B-9K	TP904	B-8J
R762	B-5H	R935	B-10K	C81	B-6E	C172	B-11C	C369	B-1G	C760	B-6B	C949	A-10L	TP905	B-10L
R763	A-4L	R936	B-10J	C82	B-4B	C177	B-11D	C370	B-3G	C774	A-6B	C950	A-10K	TP906	B-10K
R764	A-5L	R941	A-10K	C83	A-6F	C178	A-11C	C371	B-1G	C775	A-6A	C951	A-6K	TP907	B-8L
R765	A-4L	R942	A-10J	C84	A-4C	C179	B-11D	C372	B-3G	C801	B-8A	C952	A-6J	TP908	B-8K
R766	A-5L	R943	A-10K	C85	A-6E	C180	A-11C	C377	A-2I	C802	B-10B	C953	A-7K	TP909	B-7K
R767	B-5I	R944	A-10J	C86	A-4B	C181	A-12D	C378	A-4J	C803	B-8B	C954	A-7J	TP910	B-7K
R768	B-5I	R945	B-10K	C89	B-5E	C182	A-11C	C379	A-2J	C804	B-10B	C955	A-6K	TP911	B-7K
R769	B-6G	R946	B-10J	C90	B-4C	C183	A-12D	C380	A-4I	C805	B-4G	C956	A-6J		
R770	B-5G	R951	B-10L	C91	B-7E	C184	A-11C	C381	A-2G	C806	B-4G	C957	A-7K	TB1	A-1L
R771	B-5B	R952	B-10K	C92	A-5C	C185	A-12E	C382	A-3G	C807	B-8A	C958	A-7J	TB2	B-12K
R772	A-5B	R953	B-10L	C93	B-7E	C186	A-12D	C383	A-2G	C808	B-10B	C961	B-11K	TB401	A-12A
R773	B-5B	R954	B-10K	C94	A-5B	C187	B-12E	C384	A-3G	C809	B-8B	C962	B-11K		
R774	B-5B	R955	B-10K	C95	B-7E	C188	B-12E	C385	B-1G	C810	B-10A	C963	B-11K	S1	A-10D
R775	A-6B	R956	B-10J	C96	B-5C	C189	B-12E	C386	B-3G	C811	B-8B	C964	B-11K	S2	A-11D
R777	A-5A	R957	B-10K	C97	B-7E	C190	A-11B	C387	B-1G	C812	B-11B	C965	B-11L	S301	A-9D
R778	A-6A	R958	B-10J	C98	A-4B	C191	A-12D	C388	B-2G	C813	B-8B	C966	A-11K	S302	A-9D
R779	A-6B	R961	B-8K	C99	A-6E	C192	B-11C	C389	B-2G	C814	B-10B	C967	A-11L	S303	A-9C
R780	A-5B	R962	B-8J	C100	B-5C	C193	B-12D	C390	B-2F	C815	B-10A	C968	A-12K	S401	A-11I
R781	A-5B	R963	B-8K	C101	A-6E	C194	B-11C	C391	A-2G	C816	B-10A	C971	B-8L	S402	A-9B
R782	A-5A	R964	B-8J	C102	A-4B	C301	A-2L	C392	A-2G	C817	B-10A	C972	B-8K	S403	A-10B
R783	A-5A	R965	A-8K	C103	A-8E	C302	A-4L	C393	B-2G	C818	A-9B	C973	B-8K	S404	A-11B
R784	A-6B	R966	A-8J	C104	A-5D	C303	A-1K	C394	B-3G	C851	A-5K	C974	B-8J	S405	A-11H
R785	A-5B	R971	A-6L	C105	A-8E	C304	A-3K	C395	B-1G	C852	A-6K	C975	B-8K	S406	A-7C
R786	A-5B	R972	A-6K	C106	A-6B	C305	B-2L	C396	B-2G	C853	A-5J	C976	B-8J	S407	A-8C
R787	A-5A	R973	A-7L	C107	B-8E	C306	B-4L	C397	B-2G	C854	A-6J	C981	B-9L	S408	A-7B
R788	A-5A	R974	A-7K	C108	B-5C	C307	A-2K	C398	B-3G	C855	A-4K	C982	B-9K	S409	A-8B
R789	A-5A	R981	B-11K	C109	B-8E	C308	A-4K	C401	B-7F	C856	A-5K			S410	A-11F
R790	A-6A	R982	B-11K	C110	A-6B	C309	A-1K	C402	B-8F	C857	A-4K	VC401	B-9G	S411	A-6C
R791	A-6B	R985	A-11K	C111	B-8E	C310	A-3K	C403	B-9H	C858	A-5K			S412	A-4G
R801	B-5J	R986	B-11K	C112	B-5C	C311	A-2K	C409	A-12H	C861	A-4J	L1	B-3E		
R802	B-6J	R987	B-11K	C113	A-8E	C312	A-4K	C410	B-12H	C862	A-5J	L2	B-3D	TH901	B-10K
R803	A-5K	R988	B-11K	C114	B-6C	C313	B-1K	C411	A-11I	C863	B-4J	L3	B-3E	TH902	B-10J
R804	A-6K	R989	B-12K	C115	A-9E	C314	B-3K	C412	B-11H	C864	B-5J	L4	B-3D		
R805	A-5K	R990	A-11K	C116	B-7B	C315	B-2K	C413	B-11G	C865	A-4K	L401	A-11I	T901	A-11K
R806	A-6K	R991	A-11J	C117	A-9F	C316	B-4K	C414	A-12I	C866	A-5K	L403	B-12F		
R807	A-4K			C118	B-7C	C317	B-2K	C415	A-12J	C867	B-5J	L404	B-11F	X401	B-10G
R808	A-5K	VR1	A-6D	C119	B-9F	C318	B-4K	C416	B-12H	C868	B-6J	L405	B-12F	X402	B-9G
R809	A-5J	VR2	A-7D	C120	B-7C	C319	A-1I	C417	B-10G	C901	A-8K	L801	A-9A		
R810	A-6J	VR731	B-4I	C121	B-9F	C320	A-3I	C418	B-11G	C902	A-8J	L802	A-10B	LC801	A-8A
R811	A-5J	VR732	B-5I	C122	B-7C	C321	A-1I	C419	B-11G	C903	B-7K	L803	B-4G	LC802	A-10A
R812	A-6J			C123	B-10E	C322	A-3I	C420	B-11G	C904	B-7J	L804	B-4G	LC803	A-7A
R813	A-5K	C1	B-4E	C124	B-7C	C323	A-1J	C421	B-12G	C905	B-7L	L805	A-9A	LC804	A-10B
R814	A-6K	C2	B-4D	C125	A-9E	C324	A-3J	C431	B-11J	C906	B-7K	L806	A-10A	LC805	A-8A
R815	A-4K	C3	B-4E	C126	B-8C	C325	B-2I	C432	B-9F	C907	A-7K	L807	A-9B	LC806	A-10A
R816	A-5K	C4	B-4D	C127	B-10E	C326	B-3I	C433	B-9F	C908	A-7J	L808	A-10B	LC807	A-8B
R817	A-4K	C5	B-4E	C128	A-8B	C327	A-1J	C434	B-12G	C909	A-8K	L809	A-10A	LC808	A-10B
R818	A-5K	C6	B-4D	C129	B-10E	C328	A-3J	C435	A-12G	C910	A-8J	L810	A-9A	LC809	A-10A
R821	A-4L	C7	B-4E	C130	B-8C	C329	B-1I	C436	A-12G	C911	B-8K			LC810	A-9A
R822	A-5L	C8	B-4D	C131	B-10E	C330	B-3I	C437	A-11H	C912	B-8J	TP1	B-6E		
R823	A-4L	C11	A-5E	C132	A-8B	C331	A-1H	C438	A-12G	C913	A-8K	TP2	B-5C	CN15	B-9A
R824	A-5L	C12	A-5D	C133	B-10E	C332	A-3H	C439	B-12F	C914	A-8J	TP3	B-7F	CN30	B-3B
R853	B-5B	C13	A-5F	C134	B-8D	C333	A-1H	C440	B-12F	C915	B-9K	TP4	B-5B	CN31	B-1J
R854	B-4B	C14	A-5D	C135	A-8F	C334	A-3H	C442	B-12F	C916	B-9J	TP5	B-9E	CN33	B-5K
R855	B-6I	C15	A-4E	C136	B-7B	C335	A-1H	C444	A-11F	C917	B-9K	TP6	B-7C	CN35	B-3D
R856	B-6I	C16	A-4D	C139	B-10E	C336	A-3H	C446	B-10G	C918	B-9J	TP7	B-11E	CN36	B-3C
R877	B-7B	C17	A-4F	C140	B-8C	C337	A-1H	C447	B-9H	C919	A-9K	TP8	B-9B	CN37	B-12J
R879	B-7B	C18	A-4D	C141	A-10E	C338	A-3H	C448	B-11I	C920	A-9J	TP9	B-9D	CN38	B-12C
R901	B-9K	C21	B-4E	C142	A-8D	C339	A-2J	C449	B-10G	C921	B-9K	TP13	B-12D	CN39	B-11A
R902	B-9J	C22	B-4D	C143	A-10E	C340	A-3J	C450	B-9G	C922	B-9J	TP14	B-11C	CN40	B-12I
R903	B-9L	C23	B-4F	C144	A-8D	C343	B-2I	C451	B-9G	C923	B-9K	TP301	B-1K	CN42	B-7K
R904	B-9K	C24	B-4D	C145	B-10E	C344	B-3I	C452	B-9G	C924	B-9J	TP302	B-3K	CN43	B-4A
R905	B-7K	C33	B-4F	C146	B-8D	C345	A-2I	C701	B-8I	C925	B-8K	TP303	B-1H	CN44	B-6A
R906	B-7J	C34	B-4D	C147	B-10E	C346	A-4I	C702	B-8J	C926	B-8J	TP304	B-3H	CN45	B-12B
R907	B-7K	C37	B-5E	C148	A-9B	C347	A-2H	C711	B-6I	C927	A-7K	TP305	B-1J	CN55	B-7A
R908	B-7J	C38	B-5C	C149	A-11E	C348	A-4H	C712	B-6J	C928	A-7J	TP306	B-3J	CN401	A-10F
R909	B-7K	C39	B-11E	C150	B-8B	C349	B-2H	C713	B-6J	C929	A-8K	TP307	B-2H	CN402	A-10J
R910	B-7J	C40	A-7C	C151	A-11E	C350	B-4H	C739	B-4H	C930	A-8J	TP308	B-4H	CN403	A-5I
R911	B-8K	C41	B-11E	C152	B-8B	C351	B-1H	C740	B-5H	C931	A-10K	TP309	B-1J	CN404	A-5F
R912	B-8J	C42	A-7C	C153	A-11E	C352	B-3H	C741	B-4I	C932	A-10J	TP310	B-3J		
R913	B-9K	C61	B-5E	C154	A-9D	C353	A-2H	C742	B-5I	C933	B-10K	TP311	B-1F	K1	B-3E
R914	B-9J	C62	B-3C	C155	B-9E	C354	A-4H	C743	B-4H	C934	B-10J	TP312	B-3F	K2	B-3F
R915	B-10K	C63	B-5E	C156	B-6C	C355	A-2G	C744	B-5H	C935	A-10L	TP424	B-10I	K3	B-3C
R916	B-10J	C64	B-3B	C157	B-9E	C356	A-4G	C745	B-5H	C936	A-10J	TP425	B-7F	K4	B-3D
R917	B-8K	C65	B-6E	C158	B-6C	C357	A-1G	C746	B-5H	C937	B-10K	TP701	B-9I	K401	A-12J
R918	B-8J	C66	B-4C	C159	A-9E	C358	A-3G	C747	B-5H	C938	B-10J	TP702	B-9J	K402	A-12J
R921	B-8L	C67	B-5F	C160	A-5B	C359	B-2J	C748	B-6H	C939	B-10K	TP731	B-4L	K403	A-11A
R922	B-8K	C68	A-4C	C161	B-8E	C360	B-4J	C749	B-4H	C940	B-10J	TP732	B-5L	K405	B-12E
R925	A-10L	C69	B-6F	C162	B-5C	C361	B-2K	C750	B-5H	C941	A-10K	TP733	B-5I	K406	B-11F
R926	A-11J	C70	B-4C	C163	A-8F	C362	B-3K	C751	B-5I	C942	A-11J	TP734	B-6I	K407	B-12E
R927	A-10K	C71	B-6E	C164	B-7B	C363	B-2J	C752	B-6I	C943	A-10K	TP735	B-4L	K701	A-5L
R928	A-10J	C72	B-4B	C165	B-11F	C364	B-3J	C755	B-5G	C944	A-10J	TP736	B-5L		
R931	B-10K	C73	B-6E	C166	B-10C	C365	B-2K	C756	B-5G	C945	B-10K	TP901	B-10L	LD401	A-4I

— SIDE B —

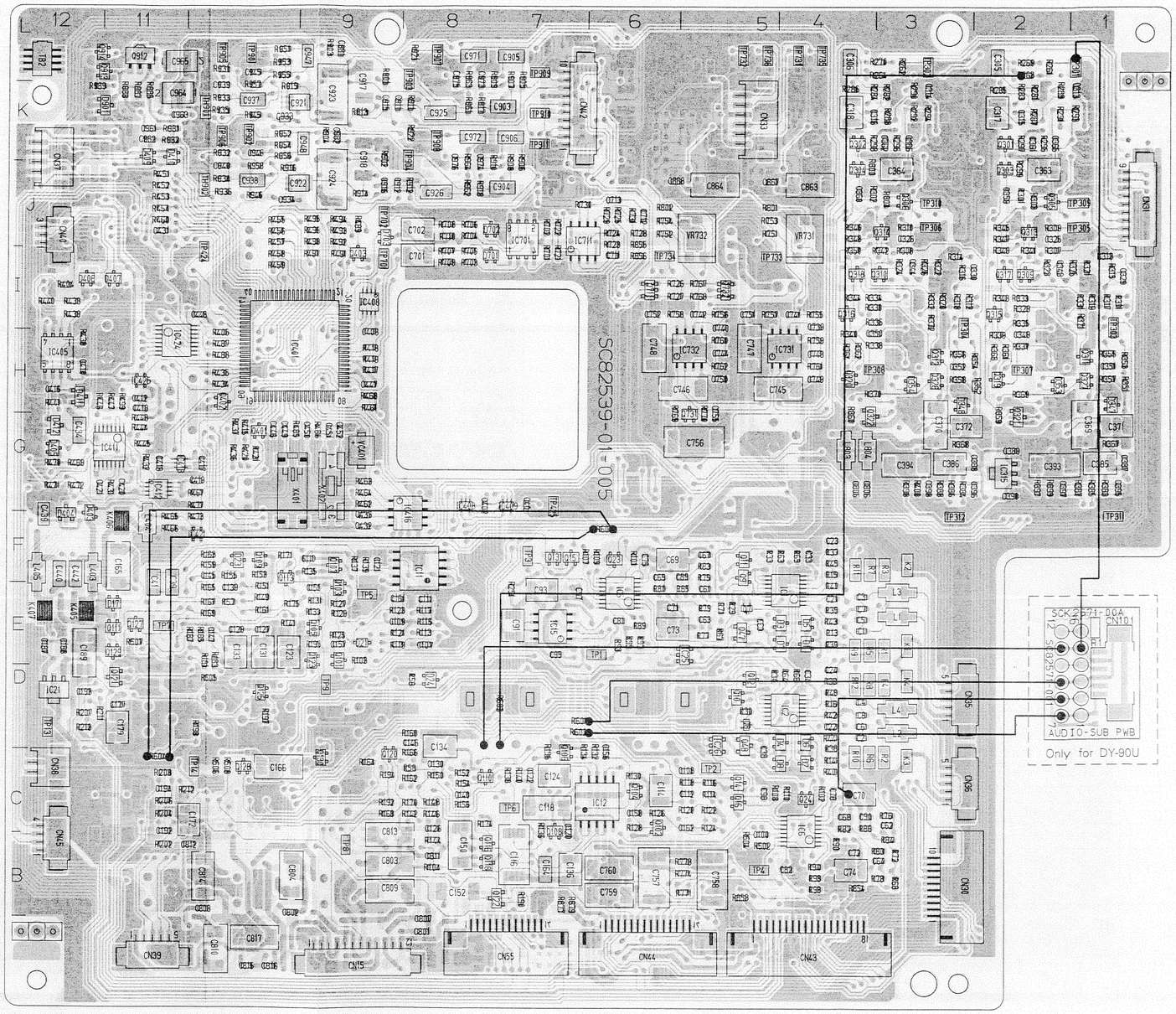

4-61-2

4.22B AUDIO & LCD CIRCUIT BOARD (FOR SERIAL No.××××0053 AND AFTER OF DY-90U)

– SIDE A –

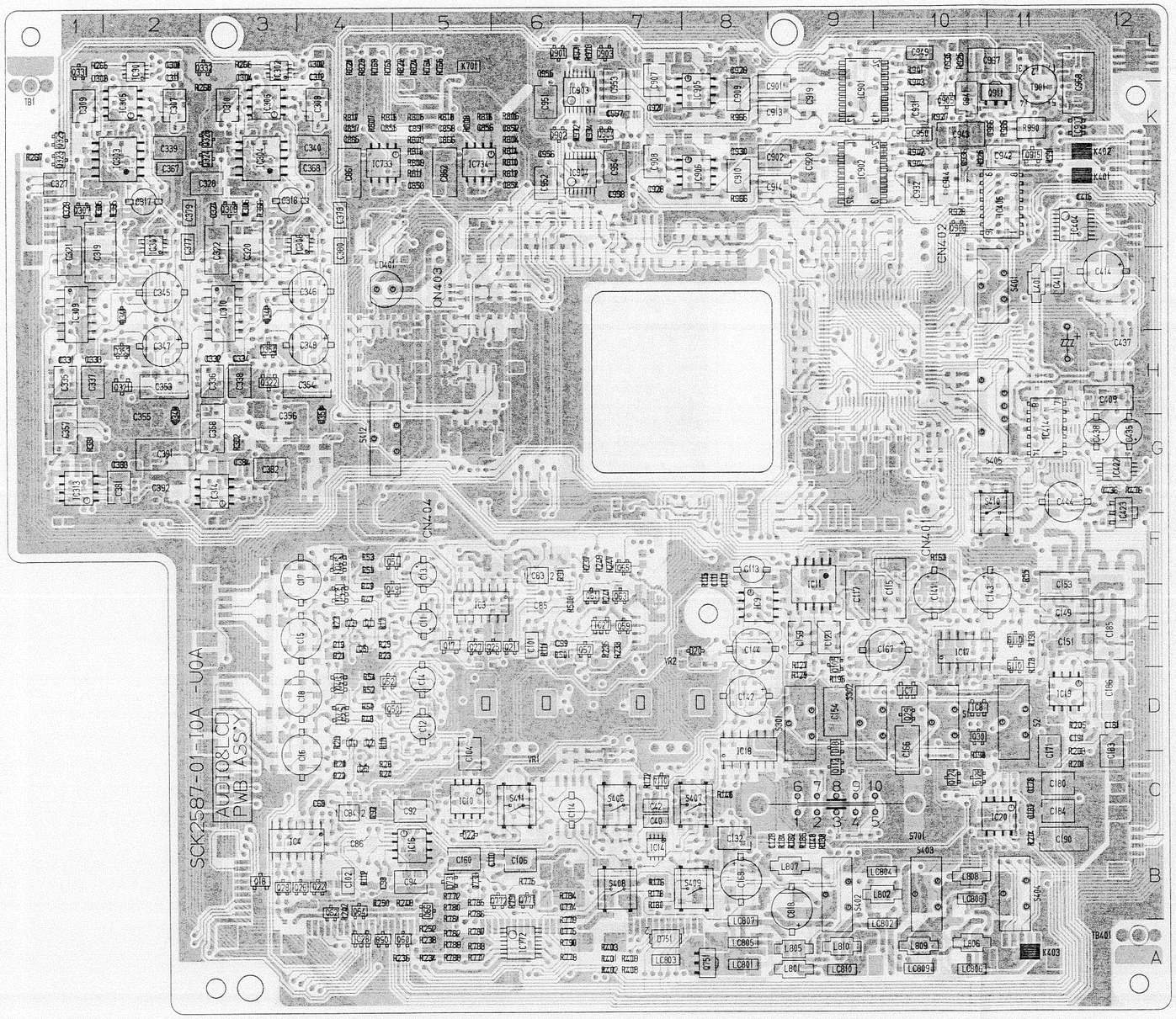

● ADDRESS TABEL OF BOARD PARTS

Each address may have an address error by one interval.

A-1C
Side — Y axis
X axis

IC1	B-4E	Q17	A-5E	Q401	B-10G	R4	B-3D	R108	B-5C	R196	B-7C	R328	B-3I	R447	B-11H
IC2	B-4D	Q18	A-3B	Q402	B-10H	R5	B-4E	R109	B-6F	R197	B-10C	R329	B-2I	R451	B-11J
IC3	A-6E	Q21	A-6E	Q403	B-9I	R6	B-4C	R110	B-4C	R198	A-11C	R330	B-4I	R452	B-11J
IC4	A-4B	Q22	A-4B	Q711	B-6I	R7	B-4F	R111	A-6E	R201	A-12C	R331	B-1I	R453	B-11J
IC5	B-6E	Q23	B-6F	Q731	B-5G	R8	B-4D	R112	A-4B	R202	B-11B	R332	B-3I	R454	B-11J
IC6	B-4B	Q24	B-4C	Q732	B-5I	R9	B-4E	R113	B-8E	R203	A-12D	R333	B-2I	R455	B-10J
IC7	A-10D	Q25	A-6E	Q733	A-5B	R10	B-4C	R114	B-5C	R204	B-11C	R334	B-4I	R456	B-10J
IC8	A-11D	Q26	A-4B	Q751	A-8A	R11	B-4F	R115	A-8E	R205	A-12D	R335	B-2I	R457	B-10I
IC9	A-8E	Q27	A-5E	Q771	A-6B	R12	B-4D	R116	B-5C	R206	B-11C	R336	B-4I	R458	B-10I
IC10	A-5C	Q28	A-3B	Q772	A-6B	R13	B-4E	R117	A-8E	R207	B-12D	R337	B-2H	R459	B-10I
IC11	A-9E	Q29	A-10D	Q801	B-3G	R14	B-4C	R118	B-5C	R208	B-11C	R338	B-4H	R460	B-11J
IC12	B-7C	Q30	A-11D	Q901	A-6L	R15	B-4F	R119	B-8E	R211	B-12D	R339	B-2H	R461	B-9H
IC13	B-9F	Q43	A-4E	Q902	A-6K	R16	B-4D	R120	B-6C	R212	B-11C	R340	B-4H	R462	B-9F
IC14	A-7B	Q44	A-4D	Q903	A-7L	R17	A-4E	R121	B-9E	R213	B-12D	R341	B-2I	R463	B-9G
IC15	B-7E	Q45	A-4F	Q904	A-7K	R18	A-4D	R122	B-6C	R214	A-11B	R342	B-3I	R464	B-9F
IC16	A-5C	Q46	A-4D	Q905	A-10K	R19	A-4E	R123	B-9E	R233	A-7E	R343	B-2I	R465	B-11F
IC17	A-10E	Q47	B-5E	Q906	A-10J	R20	A-4C	R124	B-6C	R234	A-5A	R344	B-4I	R466	B-11F
IC18	A-8D	Q48	B-5D	Q911	A-11K	R21	A-4E	R125	B-9E	R235	A-7E	R345	B-2J	R467	B-11F
IC19	A-12D	Q49	A-5E	Q912	B-11L	R22	A-4C	R126	B-6C	R236	A-5A	R346	B-4J	R468	B-9H
IC20	A-11C	Q50	A-5D	Q913	B-12K	R23	A-4E	R127	A-9E	R237	A-7F	R347	B-2I	R469	B-12G
IC21	B-12D	Q51	A-5F	Q914	B-12L	R24	A-4C	R128	B-6C	R238	A-5A	R348	B-4I	R470	B-12G
IC25	B-5E	Q52	A-4D	Q915	A-11J	R25	A-4E	R129	A-9D	R241	A-7E	R349	B-2I	R471	B-12G
IC26	B-5D	Q57	A-6E			R26	A-4C	R130	B-6C	R242	A-4B	R350	B-4I	R472	B-12G
IC27	A-7E	Q58	A-4A	D1	B-4E	R27	A-4E	R131	B-9D	R247	A-7F	R351	B-1H	R473	B-11F
IC28	A-4A	Q59	A-7E	D2	B-4C	R28	A-4D	R132	B-6C	R248	A-5B	R352	B-2H	R476	A-12G
IC301	A-2K	Q60	A-5A	D3	B-4E	R29	B-5E	R133	B-9E	R249	A-7F	R353	B-1H	R477	B-11F
IC302	A-3K	Q61	A-7E	D4	B-4D	R30	B-5D	R134	B-7C	R250	A-4B	R354	B-2H	R485	B-10G
IC303	A-2J	Q62	A-4B	D5	B-4E	R31	B-11E	R135	B-9E	R251	B-7E	R355	B-1H	R486	B-9G
IC304	A-3J	Q63	A-7E	D6	B-4D	R32	B-8D	R136	B-7C	R252	A-5A	R356	B-3H	R487	B-10H
IC305	A-2K	Q64	A-4B	D7	B-4E	R33	B-5F	R137	B-9E	R261	B-2K	R357	B-1H	R488	B-10H
IC306	A-3K	Q65	A-7F	D8	B-4C	R34	B-5D	R138	B-7C	R262	B-3K	R358	B-3H	R489	B-9J
IC307	A-2I	Q66	A-5B	D11	B-11F	R35	B-4E	R139	B-9E	R263	B-2K	R359	B-2H	R491	B-9I
IC308	A-4I	Q101	B-9D	D12	B-8D	R36	B-4D	R140	B-7C	R264	B-3K	R360	B-3H	R492	B-9I
IC309	A-1I	Q102	B-6C	D13	B-11F	R37	B-4F	R141	B-11D	R265	A-1L	R361	B-2H	R493	B-9J
IC310	A-3I	Q103	B-9D	D14	B-8E	R38	B-4D	R142	B-8C	R266	A-3L	R362	B-4H	R494	B-9J
IC313	A-1F	Q104	B-6C	D17	B-11E	R39	B-4E	R143	B-10E	R267	A-1J	R363	B-2H	R495	B-9J
IC314	A-3F	Q105	A-9E	D18	A-9D	R40	B-4C	R144	B-8B	R268	A-3K	R364	B-4H	R496	B-9J
IC315	B-2G	Q106	B-7C	D19	B-11E	R41	B-4E	R145	B-10E	R269	B-2L	R365	A-2J	R497	B-9I
IC401	B-10H	Q107	B-9E	D20	A-8E	R42	B-4D	R146	A-8C	R270	B-3L	R366	A-3J	R498	B-9I
IC403	B-8F	Q108	B-7C	D21	B-9E	R43	B-4E	R147	B-10E	R281	B-2K	R367	B-1G	R499	B-11H
IC404	A-12J	Q109	B-10E	D22	A-5C	R44	B-4D	R148	B-8C	R282	B-3K	R368	B-3G	R501	A-6E
IC405	B-12H	Q110	B-8C	D23	B-10E	R45	B-4F	R149	B-10E	R283	B-2K	R371	B-1I	R502	B-5B
IC406	A-11J	Q111	B-11E	D24	B-8D	R46	B-4D	R150	B-8C	R284	B-3K	R372	B-3I	R503	A-6E
IC408	B-9I	Q112	A-9C	D25	B-8E	R47	A-4E	R151	B-10E	R285	B-2K	R373	B-2H	R504	B-5B
IC409	B-7F	Q113	B-10E	D26	B-5C	R48	A-4D	R152	B-8C	R286	B-4K	R374	B-3H	R505	B-11D
IC411	B-11G	Q114	A-7C	D27	B-8E	R49	A-4E	R153	B-10E	R287	B-2K	R381	A-1G	R506	B-10C
IC412	B-11G	Q115	A-11E	D28	B-5C	R50	A-4D	R154	B-8C	R288	B-3K	R382	A-3G	R603	B-3D
IC413	B-11G	Q116	B-8B	D29	B-8E	R51	A-4F	R155	B-10E	R289	B-2K	R383	B-1G	R701	B-7I
IC414	A-11G	Q117	B-11E	D30	B-5C	R52	A-4D	R156	B-8C	R290	B-3K	R384	B-3G	R702	B-7J
IC416	B-8F	Q118	B-8B	D341	A-2I	R53	A-4F	R159	B-11E	R291	B-2K	R385	B-1G	R703	B-8I
IC421	B-10F	Q119	A-11E	D342	A-3I	R54	A-4D	R160	B-8D	R292	B-3K	R386	B-3G	R704	B-8I
IC422	A-12G	Q120	B-8E	D343	B-2H	R55	A-11F	R161	B-10E	R293	B-1K	R387	B-1G	R705	B-8I
IC423	A-12F	Q121	B-11D	D344	B-3H	R56	B-8E	R162	B-8D	R294	B-3K	R388	B-3G	R706	B-8J
IC424	B-11H	Q122	B-7B	D347	B-1H	R57	B-10E	R163	A-10F	R295	B-2K	R397	B-2G	R707	B-8I
IC425	B-11H	Q123	B-10D	D348	B-3H	R58	B-8D	R164	B-8D	R296	B-3K	R398	B-3G	R708	B-8J
IC701	B-7I	Q124	A-10C	D349	A-2G	R67	B-5E	R165	B-11E	R297	B-2K	R399	B-2G	R709	B-8I
IC711	B-7I	Q125	B-10D	D350	A-4G	R68	B-3B	R166	B-8E	R298	B-3K	R400	B-3G	R710	B-8I
IC731	B-5H	Q126	A-11C	D351	B-1K	R71	B-5E	R167	B-11E	R299	B-2J	R401	A-7A	R721	B-7I
IC732	B-6H	Q301	B-2K	D352	B-3K	R72	B-3B	R168	B-8E	R300	B-3J	R402	A-7A	R722	B-7J
IC733	A-5J	Q302	B-3K	D353	A-2H	R75	B-5E	R169	B-11E	R301	B-2J	R403	A-7A	R723	B-6I
IC734	A-6J	Q303	B-2J	D354	A-3H	R76	B-3C	R170	B-8D	R302	B-3J	R404	B-12I	R724	B-6J
IC772	A-6A	Q304	B-3J	D355	B-2K	R77	B-5E	R171	B-10E	R303	B-2J	R405	B-10H	R725	B-6J
IC901	A-9L	Q305	B-2J	D356	B-4K	R78	B-3B	R172	A-7C	R304	B-3J	R408	A-7A	R726	B-6I
IC902	A-9K	Q306	B-3J	D357	B-2K	R79	B-5E	R173	A-11E	R305	A-1J	R409	A-7A	R727	B-6I
IC903	A-6K	Q307	A-1J	D358	B-4K	R80	B-3B	R174	B-8C	R306	A-3J	R415	B-10G	R728	B-6J
IC904	A-6J	Q308	A-3J	D359	B-2K	R81	B-6E	R175	B-10E	R307	B-2I	R417	B-9H	R729	B-6J
IC905	A-8K	Q309	B-2I	D360	B-4K	R82	B-4C	R176	A-7B	R308	B-3I	R418	B-9H	R730	B-7J
IC906	A-8J	Q310	B-3I	D403	B-12F	R83	B-5F	R177	B-10E	R309	B-2J	R419	B-9H	R731	B-6J
IC907	A-12K	Q311	B-1H	D404	B-12F	R84	B-3B	R178	A-7B	R310	B-3J	R420	B-10G	R733	B-9C
		Q312	B-3H	D405	B-12G	R85	B-5E	R179	B-9E	R311	B-1I	R421	B-10G	R734	B-9C
Q1	A-4E	Q313	B-2J	D406	B-12I	R86	B-4C	R180	A-7B	R312	B-3I	R431	B-11G	R735	B-9C
Q2	A-4D	Q314	B-3J	D407	B-11I	R89	B-6E	R181	B-11E	R313	B-1I	R432	B-11G	R736	B-9C
Q3	A-4E	Q315	B-2I	D409	B-11J	R90	B-4B	R182	A-9B	R314	B-3I	R433	B-12I	R751	B-5J
Q4	A-4D	Q316	B-4I	D410	B-11J	R91	A-6F	R183	B-11D	R315	B-1I	R434	B-10H	R752	B-6J
Q5	A-4E	Q317	B-2I	D411	B-12H	R92	A-4C	R184	A-9B	R316	B-3I	R435	B-10H	R753	B-5J
Q6	A-4C	Q318	B-4I	D412	B-12G	R93	B-6E	R185	B-11E	R317	B-1I	R436	B-10G	R754	B-6J
Q7	B-5E	Q319	B-2H	D701	B-7I	R94	B-4B	R186	A-9B	R318	B-3I	R437	B-10G	R755	B-4I
Q8	B-5D	Q320	B-4H	D702	B-7J	R95	B-6E	R187	B-11E	R319	B-1I	R438	B-12H	R756	B-5I
Q9	B-5E	Q321	A-2H	D703	B-9I	R96	B-4B	R188	A-9B	R320	B-3I	R439	B-12I	R757	B-5I
Q10	B-5D	Q322	A-3H	D731	A-5B	R97	B-6E	R189	B-11D	R321	B-1I	R440	B-12I	R758	B-6I
Q11	B-5F	Q323	A-1J	D751	A-7A	R98	B-4B	R190	B-7B	R322	B-3I	R441	B-12H	R759	B-4H
Q12	B-5D	Q324	A-3J	D901	B-12K	R101	B-6F	R191	B-11E	R323	B-2I	R442	B-12H	R760	B-5H
Q13	B-7F	Q325	A-1K			R102	B-4C	R192	B-8E	R324	B-3I	R443	B-11G	R761	B-4H
Q14	B-5C	Q326	A-3K	R1	B-3E	R103	B-10E	R193	A-11E	R325	B-1I	R444	B-11G	R762	B-5H
Q15	B-7F	Q331	A-1K	R2	B-3C	R104	B-8B	R194	B-8E	R326	B-3I	R445	B-11G	R763	A-4L
Q16	B-5C	Q332	A-3L	R3	B-3F	R107	B-6F	R195	A-9D	R327	B-2I	R446	B-12H	R764	A-5L

4-62-1

R765	A-4L	R941	A-10K	C90	B-4C	C184	A-11C	C382	A-3G	C807	B-8A	C958	A-7J	TB401	A-12A		
R766	A-5L	R942	A-10J	C91	B-7E	C185	A-12E	C383	A-2G	C808	B-10B	C961	B-11K				
R767	B-5I	R943	A-10K	C92	A-5C	C186	A-12D	C384	A-3G	C809	B-8B	C962	B-11K	S1	A-10D		
R768	B-5I	R944	A-10J	C93	B-7E	C187	B-12E	C385	B-1G	C810	B-10A	C963	B-11K	S2	A-11D		
R769	B-6G	R945	B-10K	C94	A-5B	C188	B-12E	C386	B-3G	C811	B-8B	C964	B-11K	S301	A-9D		
R770	B-5G	R946	B-10J	C95	B-7E	C189	B-12E	C387	B-1G	C812	B-11B	C965	B-11L	S302	A-9D		
R771	B-5B	R951	B-10L	C96	B-5C	C190	A-11B	C388	B-2G	C813	B-8B	C966	A-11K	S401	A-11I		
R772	A-5B	R952	B-10K	C97	B-7E	C191	A-12D	C389	B-2G	C814	B-10B	C967	A-11L	S402	A-9B		
R773	B-5B	R953	B-10L	C98	A-4B	C192	B-11C	C390	B-2F	C815	B-10A	C968	A-12K	S403	A-10B		
R774	B-5B	R954	B-10K	C99	A-6E	C193	B-12D	C391	A-2G	C816	B-10A	C971	B-8L	S404	A-11B		
R775	A-6B	R955	B-10K	C100	B-5C	C194	B-11C	C392	A-2G	C817	B-10A	C972	B-8K	S405	A-11H		
R777	A-5A	R956	B-10J	C101	A-6E	C301	A-2L	C393	B-2G	C818	A-9B	C973	B-8K	S406	A-7C		
R778	A-6A	R957	B-10K	C102	A-4B	C302	A-4L	C394	B-3G	C819	B-3G	C974	B-8J	S407	A-8C		
R779	A-6B	R958	B-10J	C103	B-8F	C303	A-1K	C395	B-1G	C851	A-5K	C975	B-8K	S408	A-7B		
R780	A-5B	R961	B-8K	C104	A-5D	C304	A-3K	C396	B-2G	C852	A-6K	C976	B-8J	S409	A-8B		
R781	A-5B	R962	B-8J	C105	B-9F	C305	B-2L	C397	B-2G	C853	A-5J	C981	B-9L	S410	A-11F		
R782	A-5A	R963	B-8K	C106	A-6B	C306	B-4L	C398	B-3G	C854	A-6J	C982	B-9K	S411	A-6C		
R783	A-5A	R964	B-8J	C107	B-8F	C307	A-2K	C401	B-7F	C855	A-4K			S412	A-4G		
R784	A-6B	R965	A-8K	C108	B-5C	C308	A-4K	C402	B-8F	C856	A-5K	VC401	B-9G	S701	A-9C		
R785	A-5B	R966	A-8J	C109	B-9F	C309	A-1K	C403	B-9H	C857	A-4K						
R786	A-5B	R971	A-6L	C110	A-6B	C310	A-3K	C409	A-12H	C858	A-5K	L1	B-3E	TH901	B-10K		
R787	A-5A	R972	A-6K	C111	A-8E	C311	A-2K	C410	B-12H	C861	A-4J	L2	B-3D	TH902	B-10J		
R788	A-5A	R973	A-7L	C112	B-5C	C312	A-4K	C411	A-11I	C862	A-5J	L3	B-3E				
R789	A-5A	R974	A-7K	C113	A-8F	C313	B-1K	C412	B-11H	C863	B-4J	L4	B-3D	T901	A-11K		
R790	A-6A	R981	B-11K	C114	A-6C	C314	B-3K	C413	B-11G	C864	B-5J	L401	A-11I				
R791	A-6B	R982	B-11K	C115	A-10E	C315	B-2K	C414	A-12I	C865	A-4K	L403	B-12F	X401	B-10G		
R801	B-5J	R985	A-11K	C116	B-7B	C316	B-3K	C415	A-12J	C866	A-5K	L404	B-11F	X402	B-9G		
R802	B-6J	R986	B-11K	C117	A-9E	C317	A-2J	C416	B-12H	C867	B-5J	L405	B-12F				
R803	A-5K	R987	B-11K	C118	B-7C	C318	A-3J	C417	B-10G	C868	B-6J	L801	A-9A	LC801	A-8A		
R804	A-6K	R988	B-11K	C119	B-9E	C319	A-1I	C418	B-11G	C901	A-8K	L802	A-10B	LC802	A-10A		
R805	A-5K	R989	B-12K	C120	B-7C	C320	A-3I	C419	B-11G	C902	A-8J	L803	B-4G	LC803	A-7A		
R806	A-6K	R990	A-11K	C121	B-9E	C321	A-1I	C420	B-11G	C903	B-7K	L804	B-4G	LC804	A-10B		
R807	A-4K	R991	A-11J	C122	B-7C	C322	A-3I	C421	B-12G	C904	B-7J	L805	A-9A	LC805	A-8A		
R808	A-5K			C123	A-9E	C323	A-1J	C422	B-11H	C905	B-7L	L806	A-10A	LC806	A-10A		
R809	A-5J	VR1	A-6D	C124	B-7C	C324	A-3J	C431	B-11J	C906	B-7K	L807	A-9B	LC807	A-8B		
R810	A-6J	VR2	A-7D	C125	B-10E	C325	B-2I	C432	B-9F	C907	A-7K	L808	A-10B	LC808	A-10B		
R811	A-5J	VR731	B-4I	C126	B-8C	C326	B-3I	C433	B-9F	C908	A-7J	L809	A-10A	LC809	A-10A		
R812	A-6J	VR732	B-5I	C127	B-10E	C327	A-1J	C434	B-12G	C909	A-8K	L810	A-9A	LC810	A-9A		
R813	A-5K			C128	A-8B	C328	A-3J	C435	A-12G	C910	A-8J						
R814	A-6K	C1	B-4E	C129	B-10E	C329	B-1I	C436	A-12G	C911	B-8K	TP1	B-6E	CN15	B-9A		
R815	A-4K	C2	B-4D	C130	B-9C	C330	B-3I	C437	A-11H	C912	B-8J	TP2	B-4B	CN30	B-3B		
R816	A-5K	C3	B-4E	C131	B-10E	C331	A-1H	C438	A-12G	C913	A-8K	TP3	B-7F	CN31	B-1J		
R817	A-4K	C4	B-4D	C132	A-8B	C332	A-3H	C439	B-12F	C914	A-8J	TP4	B-5B	CN33	B-5K		
R818	A-5K	C5	B-4E	C133	B-10E	C333	A-1H	C440	B-12F	C915	B-9K	TP5	B-9E	CN35	B-3E		
R819	B-3G	C6	B-4D	C134	B-8C	C334	A-3H	C442	B-12F	C916	B-9J	TP6	B-7C	CN36	B-3D		
R820	B-3H	C7	B-4E	C135	B-9F	C335	A-1H	C444	A-11F	C917	B-9K	TP7	B-11E	CN37	B-12J		
R821	A-4L	C8	B-4D	C136	B-7B	C336	A-3H	C446	B-10G	C918	B-9J	TP8	B-8E	CN38	B-12C		
R822	A-5L	C11	A-5E	C139	B-10E	C337	A-1H	C447	B-9H	C919	A-9K	TP9	B-9E	CN39	B-11A		
R823	A-4L	C12	A-5D	C140	B-8C	C338	A-3H	C448	B-11I	C920	A-9J	TP13	B-12D	CN40	B-12I		
R824	A-5L	C13	A-5F	C141	A-10E	C339	A-2K	C449	B-10G	C921	B-9K	TP14	B-11C	CN42	B-7K		
R853	B-5B	C14	A-5D	C142	A-8D	C340	A-4K	C450	B-9G	C922	B-9J	TP301	B-1K	CN43	B-4A		
R854	B-3B	C15	A-4E	C143	A-11E	C343	B-2I	C451	B-9G	C923	B-9K	TP302	B-3K	CN44	B-6A		
R855	B-6I	C16	A-4D	C144	A-8E	C344	B-3I	C452	B-9G	C924	B-9J	TP303	B-1H	CN45	B-12B		
R856	B-6I	C17	A-4F	C145	B-11E	C345	A-2I	C701	B-8I	C925	B-8K	TP304	B-3H	CN50	B-3C		
R877	B-7B	C18	A-4D	C146	B-8D	C346	A-4I	C702	B-8J	C926	B-8J	TP305	B-1J	CN55	B-7A		
R879	B-7B	C33	B-4F	C147	B-11E	C347	A-2H	C711	B-6I	C927	A-7K	TP306	B-3J	CN401	A-10F		
R901	B-9K	C34	B-4D	C148	A-9B	C348	A-4H	C712	B-6J	C928	A-7J	TP307	B-2H	CN402	A-10J		
R902	B-9J	C37	B-5E	C149	A-11E	C349	B-2H	C713	B-6J	C929	A-8K	TP308	B-4H	CN403	A-5I		
R903	B-9L	C38	B-5C	C150	B-8B	C350	B-4H	C739	B-4H	C930	A-8J	TP309	B-1J	CN404	A-5F		
R904	B-9K	C39	B-10F	C151	A-11E	C351	B-1H	C740	B-5H	C931	A-10K	TP310	B-3J				
R905	B-7K	C40	A-7C	C152	B-8B	C352	B-3H	C741	B-4I	C932	A-10J	TP311	B-1F	K1	B-3E		
R906	B-7J	C41	B-10F	C153	A-11E	C353	A-2H	C742	B-5I	C933	B-10K	TP312	B-3F	K2	B-3F		
R907	B-7K	C42	A-7C	C154	A-9D	C354	A-4H	C743	B-4H	C934	B-10J	TP424	B-10I	K3	B-3C		
R908	B-7J	C61	B-5E	C155	B-9D	C355	A-2G	C744	B-5H	C935	A-10L	TP425	B-7F	K4	B-3D		
R909	B-7K	C62	B-3C	C156	B-6C	C356	A-3G	C745	B-5H	C936	A-10J	TP701	B-9I	K401	A-12J		
R910	B-7J	C63	B-5E	C157	B-9E	C357	A-1G	C746	B-5H	C937	B-10K	TP702	B-9J	K402	A-12J		
R911	B-8K	C64	B-3B	C158	B-6C	C358	A-3G	C747	B-5H	C938	B-10J	TP731	B-4L	K403	A-11A		
R912	B-8J	C65	B-6E	C159	A-9E	C359	B-2J	C748	B-6H	C939	B-10K	TP732	B-5L	K405	B-12E		
R913	B-9K	C66	B-4C	C160	A-5B	C360	B-4J	C749	B-4H	C940	B-10J	TP733	B-5I	K406	B-11F		
R914	B-9J	C67	B-5F	C161	B-9E	C361	B-2J	C750	B-5H	C941	A-10K	TP734	B-6I	K407	B-12E		
R915	B-10K	C68	A-4C	C162	B-6C	C362	B-3J	C751	B-5I	C942	A-11J	TP735	B-4L	K701	A-5L		
R916	B-10J	C69	B-6F	C163	B-9F	C363	B-1J	C752	B-6I	C943	A-10K	TP736	B-5L				
R917	B-8K	C70	B-4C	C164	B-7B	C364	B-3J	C755	B-5G	C944	A-10J	TP901	B-10L	LD401	A-4I		
R918	B-8J	C71	B-6E	C165	B-11F	C365	B-1K	C756	B-5G	C945	B-10K	TP902	B-10K				
R921	B-8L	C72	B-4B	C166	A-10D	C366	B-3K	C757	B-6B	C946	B-10J	TP903	B-8K				
R922	B-8K	C73	B-6E	C167	A-10E	C367	A-2J	C758	B-5B	C947	B-9L	TP904	B-8J				
R925	A-10L	C74	B-4B	C168	A-8B	C368	A-4J	C759	B-6B	C948	B-9K	TP905	B-10L				
R926	A-11J	C75	B-6F	C171	A-11D	C369	B-1G	C760	B-6B	C949	A-10L	TP906	B-10K				
R927	A-10K	C76	B-4C	C172	B-11C	C370	B-3G	C774	A-6B	C950	A-10K	TP907	B-8L				
R928	A-10J	C81	B-6E	C177	B-11D	C371	B-1G	C775	A-6A	C951	A-6K	TP908	B-8K				
R931	B-10K	C82	B-4B	C178	A-11C	C372	B-3G	C801	B-8A	C952	A-6J	TP909	B-7K				
R932	B-10J	C83	A-6F	C179	B-11D	C377	A-2I	C802	B-10B	C953	A-7K	TP910	B-7K				
R933	B-10K	C84	A-4C	C180	A-11C	C378	A-4J	C803	B-8B	C954	A-7J	TP911	B-7K				
R934	B-10J	C85	A-6E	C181	A-12D	C379	A-2J	C804	B-10B	C955	A-6K						
R935	B-10K	C86	A-4B	C182	A-11C	C380	A-4I	C805	B-4G	C956	A-6J	TB1	A-1L				
R936	B-10J	C89	B-5E	C183	A-12D	C381	A-2G	C806	B-4G	C957	A-7K	TB2	B-12K				

— SIDE B —

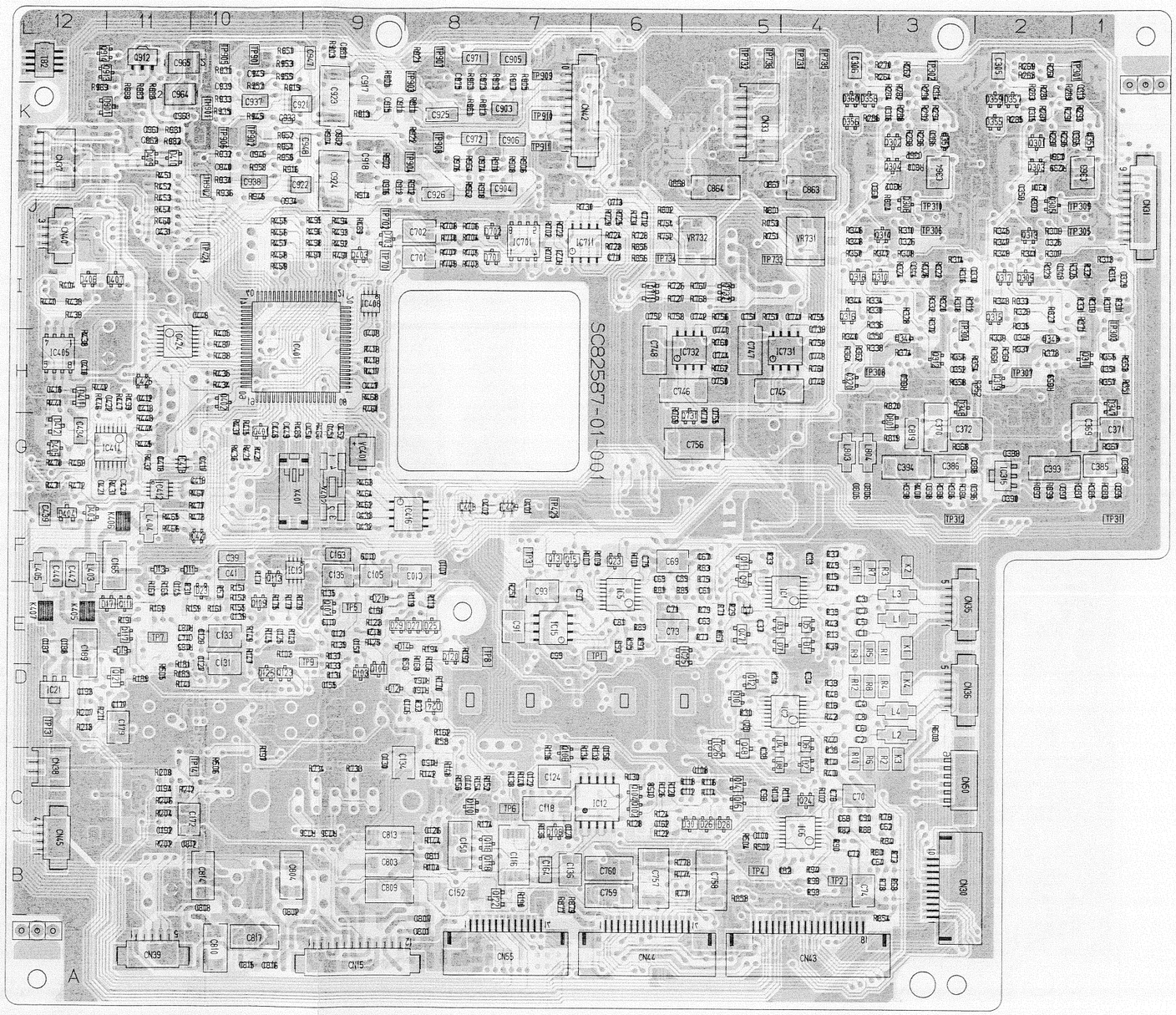

4-62-2

4.23 PR BOARD SCHEMATIC DIAGRAM 09

– PR BOARD SCHEMATIC DIAGRAM 1/4 –

✳ : Not mounted.

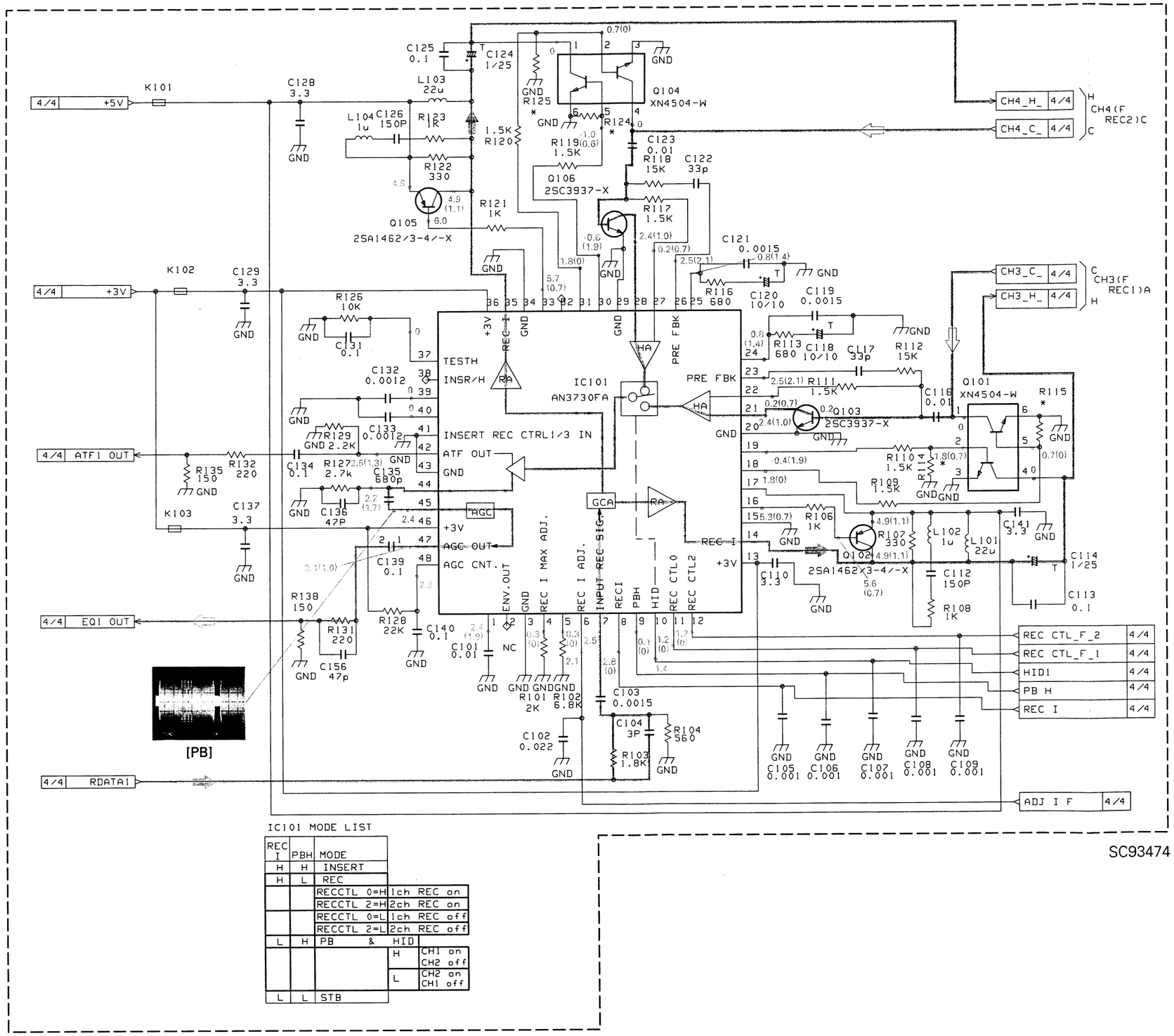

IC101 MODE LIST

REC I	PBH	MODE	
H	H	INSERT	
H	L	REC	
		RECCTL 0=H	1ch REC on
		RECCTL 2=H	2ch REC on
		RECCTL 0=L	1ch REC off
		RECCTL 2=L	2ch REC off
L	H	PB & HID	
		H	CH1 on CH2 off
		L	CH2 on CH1 off
L	L	STB	

SC93474

4-63

– PR BOARD SCHEMATIC DIAGRAM 2/4 –

✳ : Not mounted.

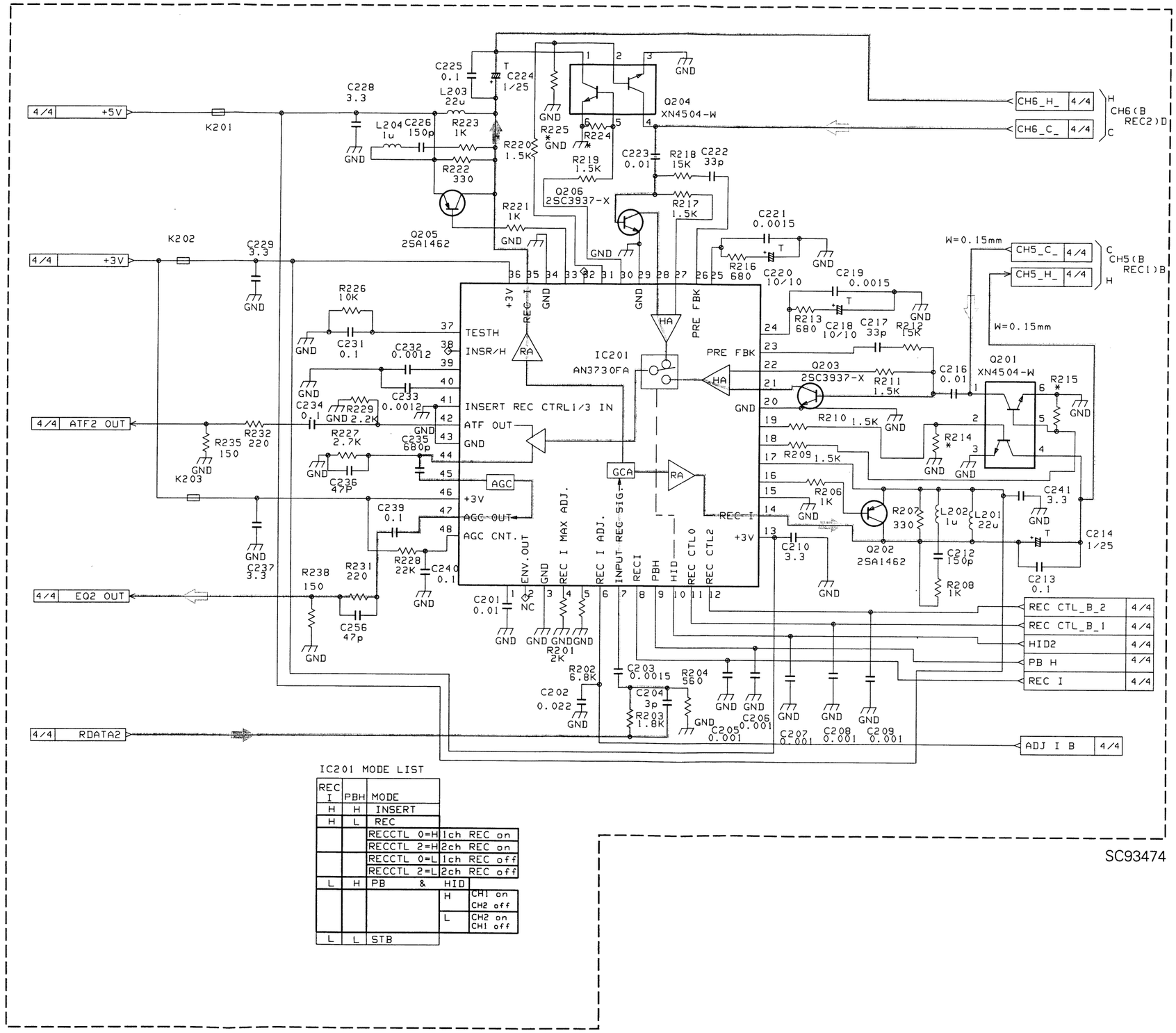

IC201 MODE LIST

REC I	PBH	MODE		
H	H	INSERT		
H	L	REC		
		RECCTL 0=H		1ch REC on
		RECCTL 2=H		2ch REC on
		RECCTL 0=L		1ch REC off
		RECCTL 2=L		2ch REC off
L	H	PB & HID		
			H	CH1 on CH2 off
			L	CH2 on CH1 off
L	L	STB		

4-64

– PR BOARD SCHEMATIC DIAGRAM 3/4 –

✳ : Not mounted.

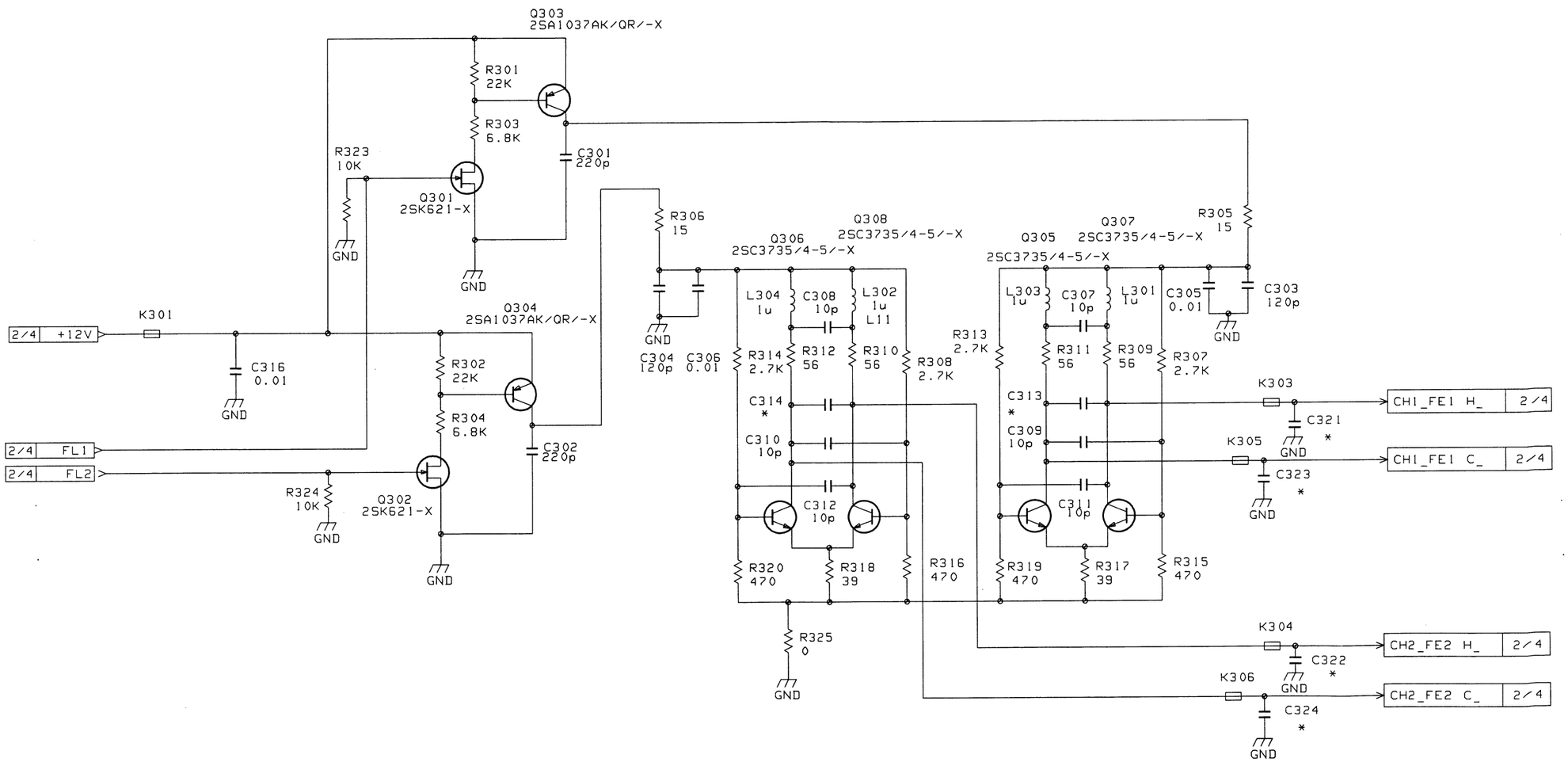

S C93474

4-65

– PR BOARD SCHEMATIC DIAGRAM 4/4 –

✳ : Not mounted.

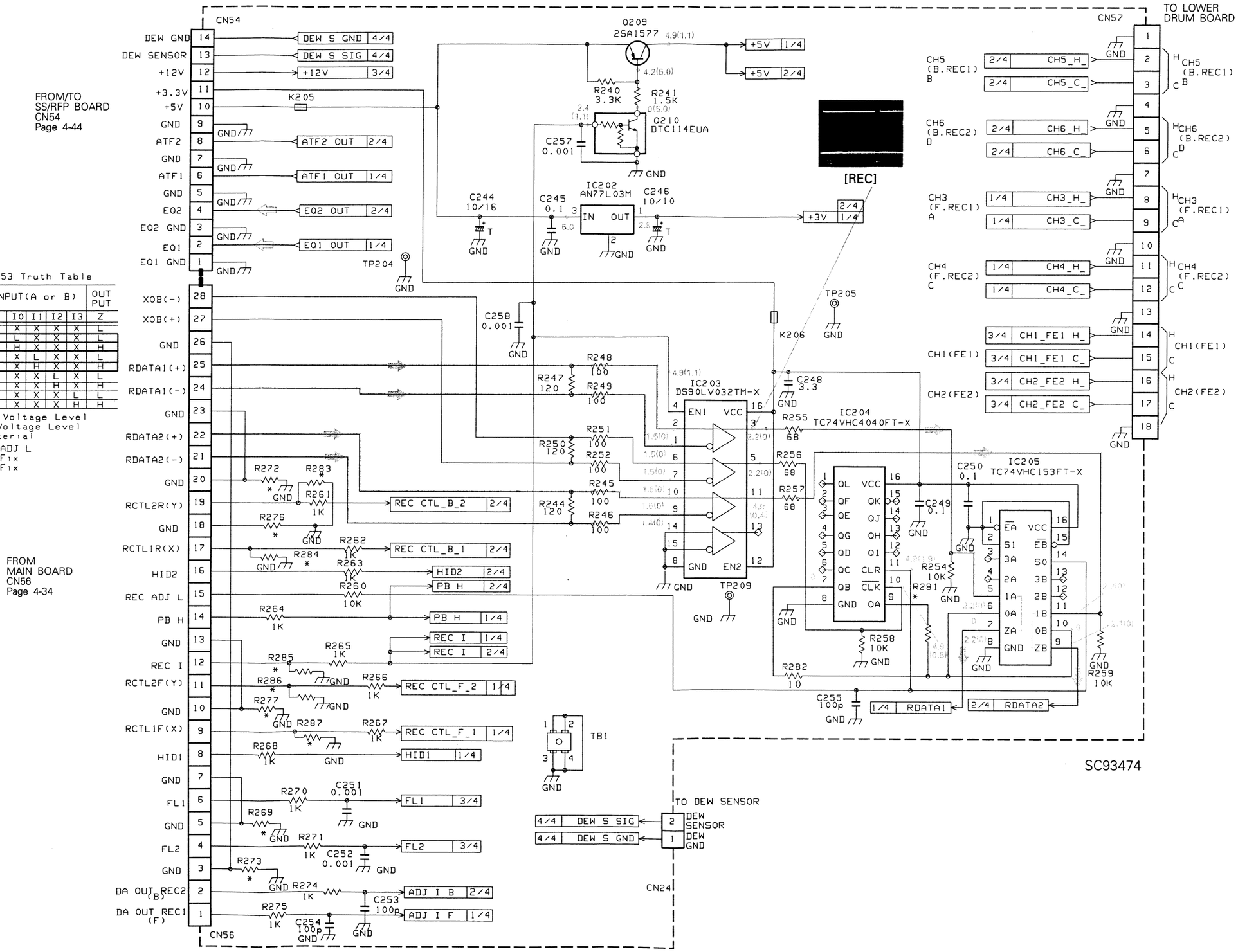

VHC153 Truth Table

SELECT INPUT		INPUT(A or B)					OUT PUT
S0	S1	E	I0	I1	I2	I3	Z
X	X	H	X	X	X	X	L
L	L	L	L	X	X	X	L
L	L	L	H	X	X	X	H
H	L	L	X	L	X	X	L
H	L	L	X	H	X	X	H
L	H	L	X	X	L	X	L
L	H	L	X	X	H	X	H
H	H	L	X	X	X	L	L
H	H	L	X	X	X	H	H

H=HIGH Voltage Level
L=Low Voltage Level
X=Immaterial
S0=REC ADJ L
S1=LOW Fix
E=LOW Fix

4-66

4.24 PR CIRCUIT BOARD

– SIDE A –

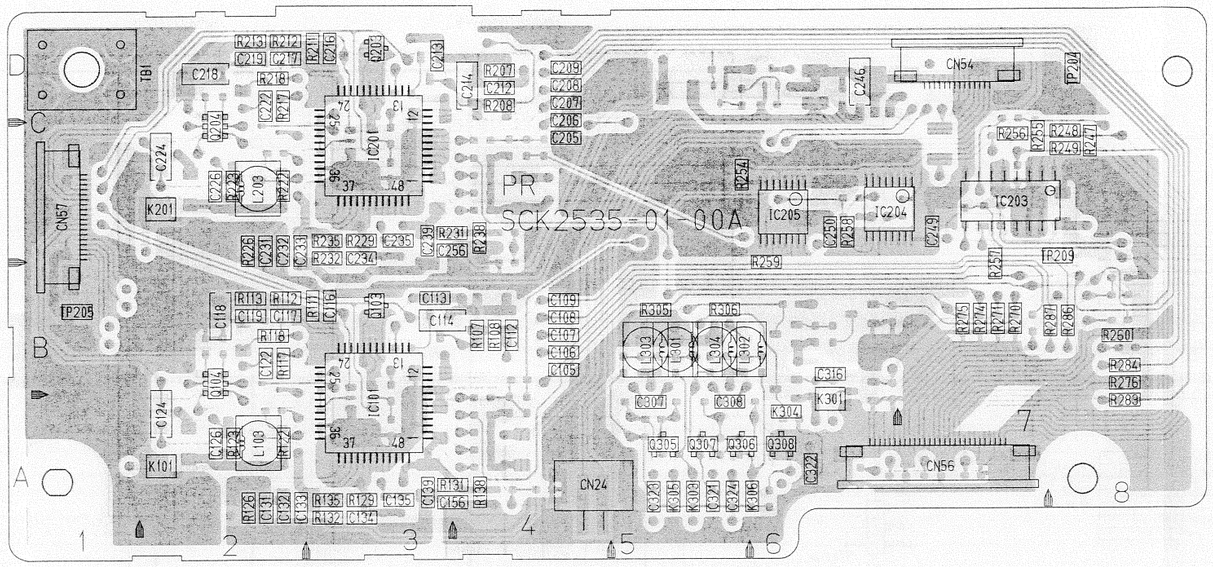

– SIDE B –

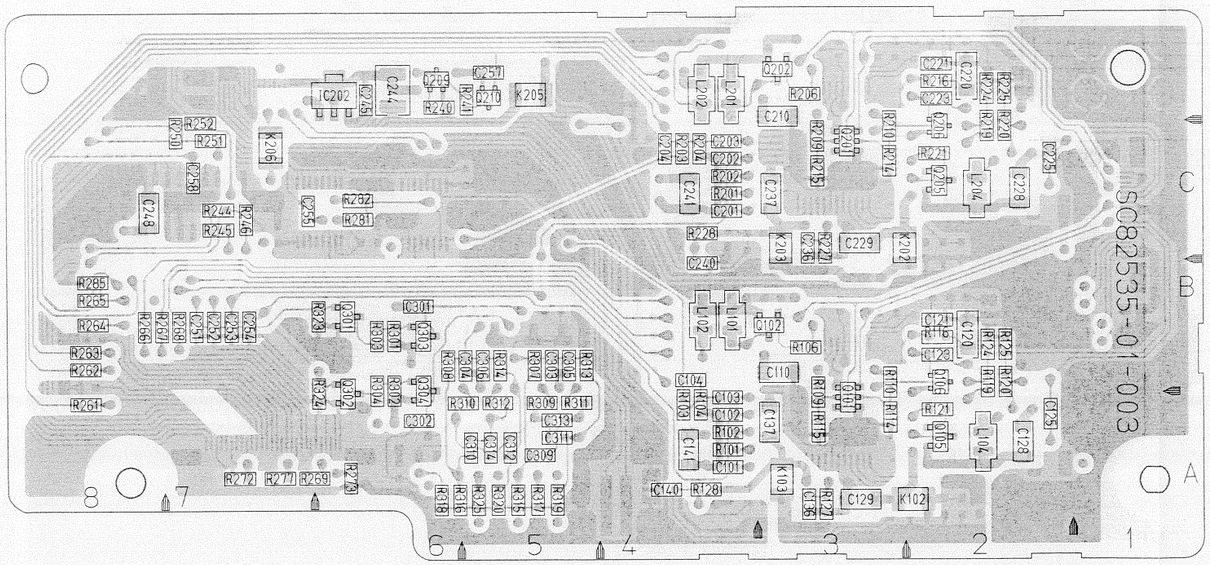

● **ADDRESS TABEL OF BOARD PARTS**

Each address may have an address error by one interval.

Side — A-1C — Y axis / X axis

IC101	A-3A	R216	B-2C	R317	B-5A	C236	B-3B
IC201	A-3C	R217	A-2C	R318	B-6A	C237	B-3B
IC202	B-6C	R218	A-2C	R319	B-5A	C239	A-3B
IC203	A-7B	R219	B-2C	R320	B-5A	C240	B-4B
IC204	A-6B	R220	B-2C	R323	B-6B	C241	B-4B
IC205	A-6B	R221	B-2C	R324	B-6A	C244	B-6C
		R222	A-2C	R325	B-5A	C245	B-6C
Q101	B-3A	R223	A-2C			C246	A-6C
Q102	B-3B	R224	B-2C	C101	B-4A	C248	B-7B
Q103	A-3B	R225	B-2C	C102	B-4A	C249	A-7B
Q104	A-2A	R226	A-2B	C103	B-4A	C250	A-6B
Q105	B-2A	R227	B-3B	C104	B-4A	C251	B-7B
Q106	B-2A	R228	B-4B	C105	A-4B	C252	B-7B
Q201	B-3C	R229	A-3B	C106	A-4B	C253	B-7B
Q202	B-3C	R231	A-3B	C107	A-4B	C254	B-7B
Q203	A-3C	R232	A-3B	C108	A-4B	C255	B-6B
Q204	A-2C	R235	A-3B	C109	A-4B	C256	A-3B
Q205	B-2C	R238	A-4B	C110	B-3A	C257	B-5C
Q206	B-2C	R240	B-6C	C112	A-4B	C258	B-7C
Q209	B-6C	R241	B-5C	C113	A-3B	C301	B-6B
Q210	B-5C	R244	B-7B	C114	A-3B	C302	B-6A
Q301	B-6B	R245	B-7B	C116	A-3B	C303	B-5B
Q302	B-6A	R246	B-7B	C117	A-2B	C304	B-5B
Q303	B-6B	R247	A-8C	C118	A-2B	C305	B-5B
Q304	B-6A	R248	A-7C	C119	A-2B	C306	B-5B
Q305	A-5A	R249	A-7C	C120	B-2B	C307	A-5A
Q306	A-5A	R250	B-7C	C121	B-2B	C308	A-5A
Q307	A-5A	R251	B-7C	C122	A-2B	C309	B-5A
Q308	A-6A	R252	B-7C	C123	B-2B	C310	B-5A
		R254	A-5C	C124	A-1A	C311	B-5A
R101	B-4A	R255	A-7C	C125	B-1A	C312	B-5A
R102	B-4A	R256	A-7C	C126	A-2A	C313	B-5A
R103	B-4A	R257	A-7B	C128	B-2A	C314	B-5A
R104	B-4A	R258	A-6B	C129	B-3A	C316	A-6A
R106	B-3B	R259	A-5B	C131	A-2A	C321	A-5A
R107	A-4B	R260	A-8B	C132	A-2A	C322	A-6A
R108	A-4B	R261	B-8A	C133	A-2A	C323	A-5A
R109	B-3A	R262	B-8B	C134	A-3A	C324	A-5A
R110	B-3A	R263	B-8B	C135	A-3A		
R111	A-2B	R264	B-8B	C136	B-3A	L101	B-4B
R112	A-2B	R265	B-8B	C137	B-3A	L102	B-4B
R113	A-2B	R266	B-8B	C139	A-3A	L103	A-2A
R114	B-3A	R267	B-7B	C140	B-4A	L104	B-2A
R115	B-3A	R268	B-7B	C141	B-4A	L201	B-4C
R116	B-2B	R269	B-6A	C156	A-3A	L202	B-4C
R117	A-2B	R270	A-7B	C201	B-4B	L203	A-2C
R118	A-2B	R271	A-7B	C202	B-4C	L204	B-2C
R119	B-2A	R272	B-7A	C203	B-4C	L301	A-5B
R120	B-2A	R273	B-6A	C204	B-4C	L302	A-5B
R121	B-2A	R274	A-7B	C205	A-4C	L303	A-5B
R122	A-2A	R275	A-7B	C206	A-4C	L304	A-5B
R123	A-2A	R276	A-8A	C207	A-4C		
R124	B-2B	R277	B-7A	C208	A-4C	K101	A-1A
R125	B-2B	R281	B-6B	C209	A-4C	K102	B-2A
R126	A-2A	R282	B-6B	C210	B-3C	K103	B-3A
R127	B-3A	R283	A-8A	C212	A-4C	K201	A-1B
R128	B-4A	R284	A-8B	C213	A-3C	K202	B-2B
R129	A-3A	R285	B-8B	C214	A-4C	K203	B-3B
R131	A-3A	R286	A-8B	C216	A-3C	K205	B-5C
R132	A-3A	R287	A-7B	C217	A-2C	K206	B-7C
R135	A-3A	R301	B-6B	C218	A-2C	K301	A-6A
R138	A-4A	R302	B-6A	C219	A-2C	K303	A-5A
R201	B-4B	R303	B-6B	C220	B-2C	K304	A-6A
R202	B-4C	R304	B-6A	C221	B-2C	K305	A-5A
R203	B-4C	R305	A-5B	C222	A-2C	K306	A-5A
R204	B-4C	R306	A-5B	C223	B-2C		
R206	B-3C	R307	B-5B	C224	A-1C	CN24	A-4A
R207	A-4C	R308	B-5B	C225	B-1C	CN54	A-7C
R208	A-4C	R309	B-5A	C226	A-2C	CN56	A-7A
R209	B-3C	R310	B-5A	C228	B-2C	CN57	A-1B
R210	B-3C	R311	B-5A	C229	B-3B		
R211	A-2C	R312	B-5A	C231	A-2B	TB1	A-1C
R212	A-2C	R313	B-5B	C232	A-2B		
R213	A-2C	R314	B-5B	C233	A-2B		
R214	B-3C	R315	B-5A	C234	A-3B		
R215	B-3C	R316	B-5A	C235	A-3B		

4-67

4.25 MT BOARD SCHEAMTIC DIAGRAM 10

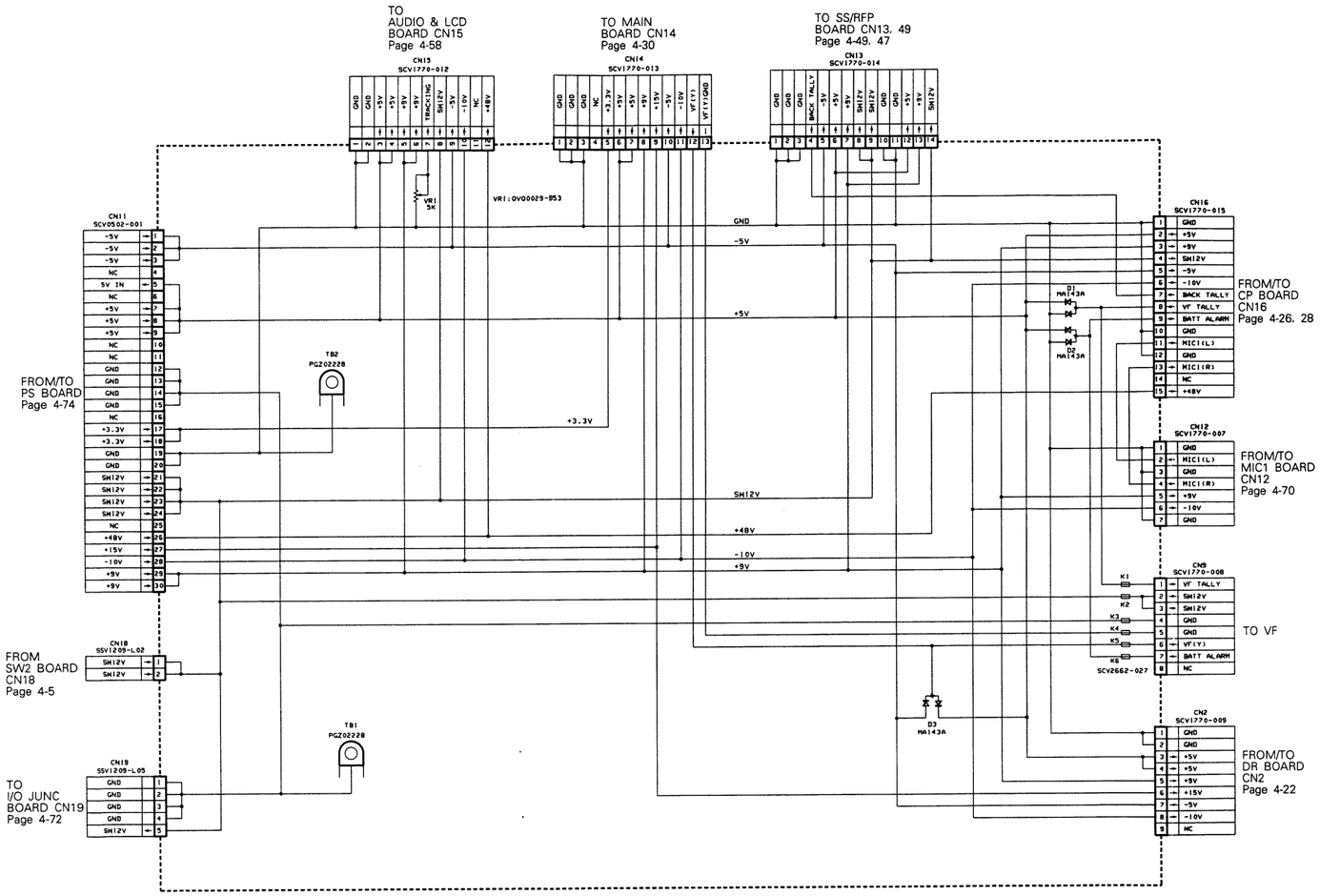

SC92611

4.26 LCD SUB SCHEMATIC DIAGRAM 11

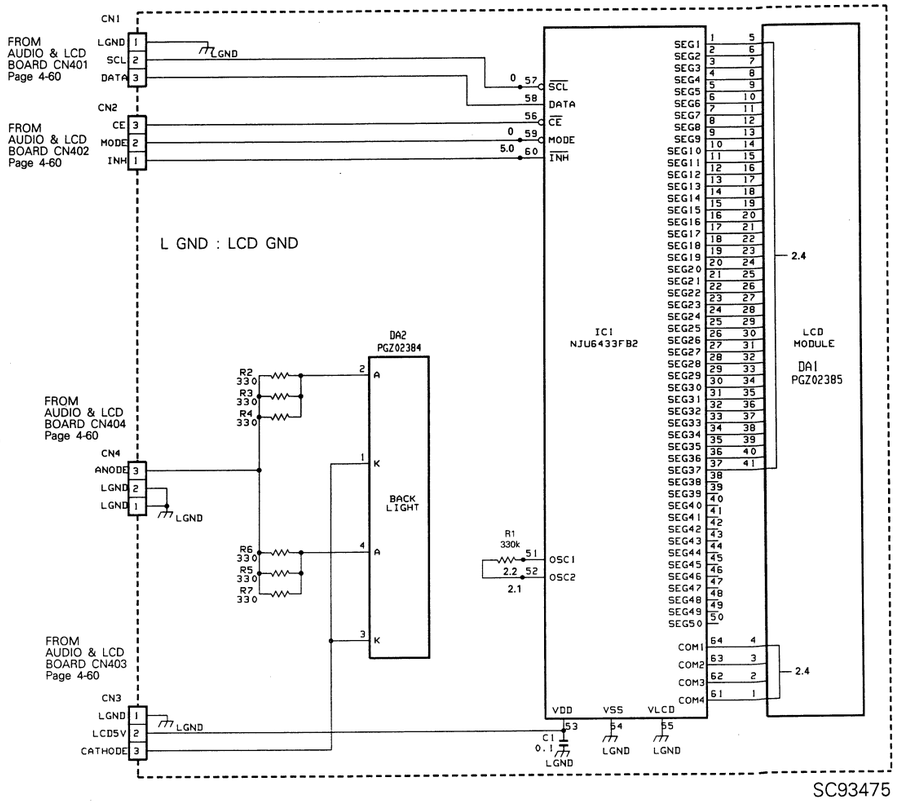

SC93475

4-68

4.27 MT CIRCUIT BOARD

– SIDE A –

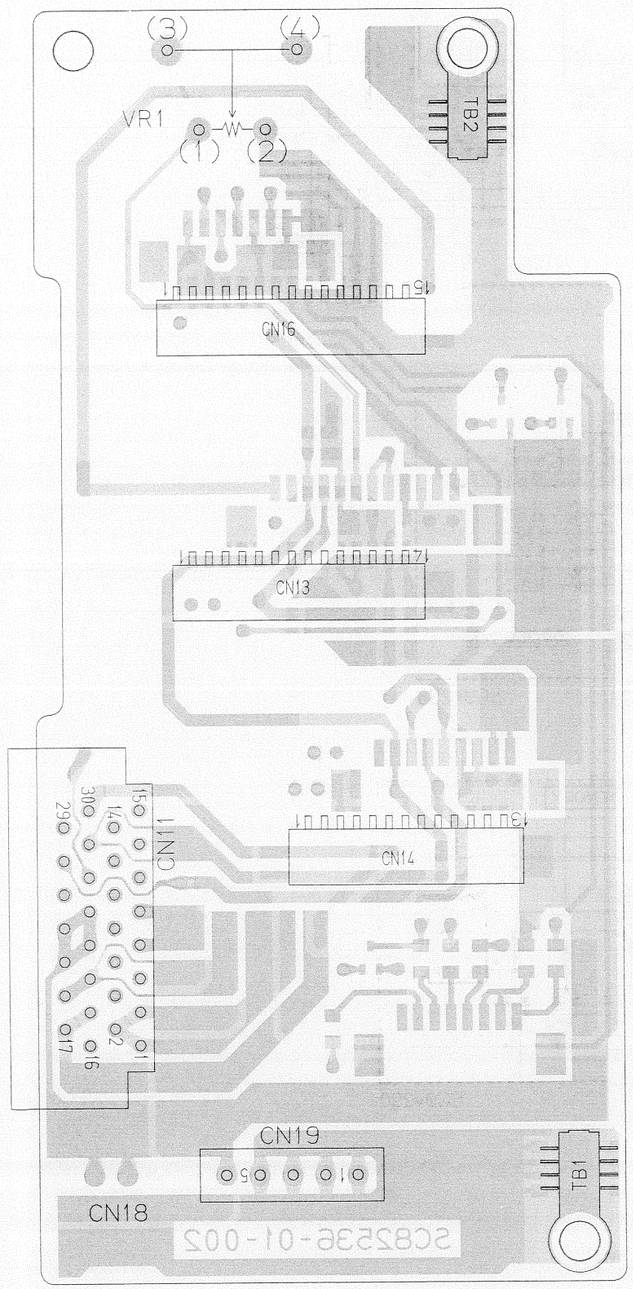

– SIDE B –

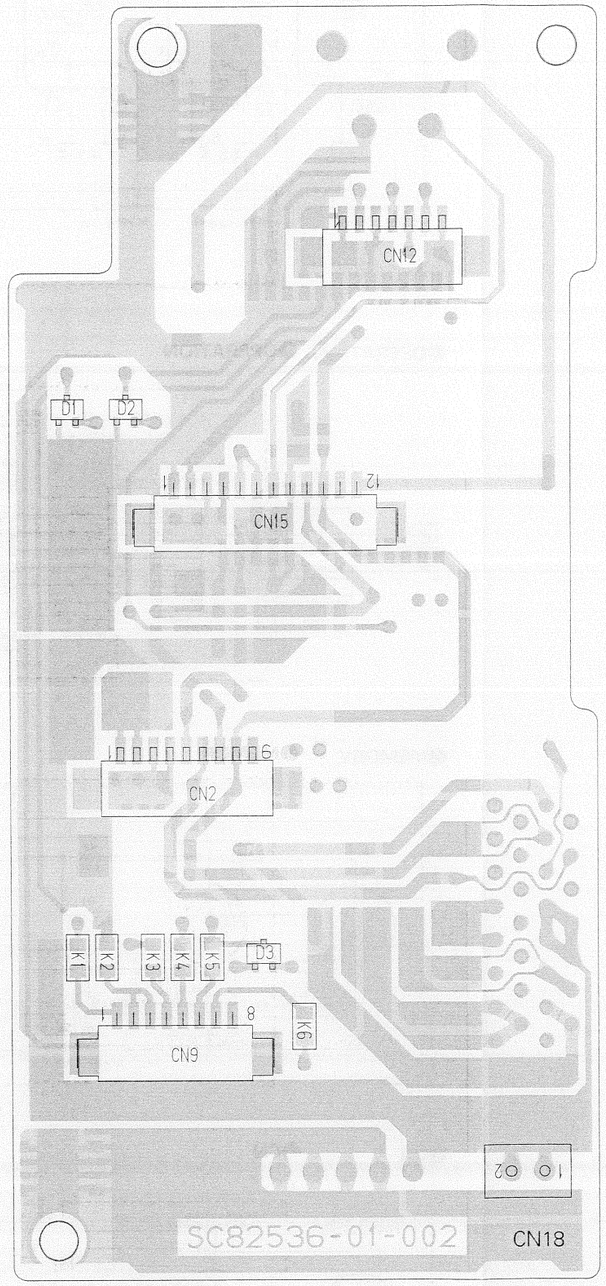

SC82536-01-002

4.28 LCD SUB CIRCUIT BOARD

– SIDE B –

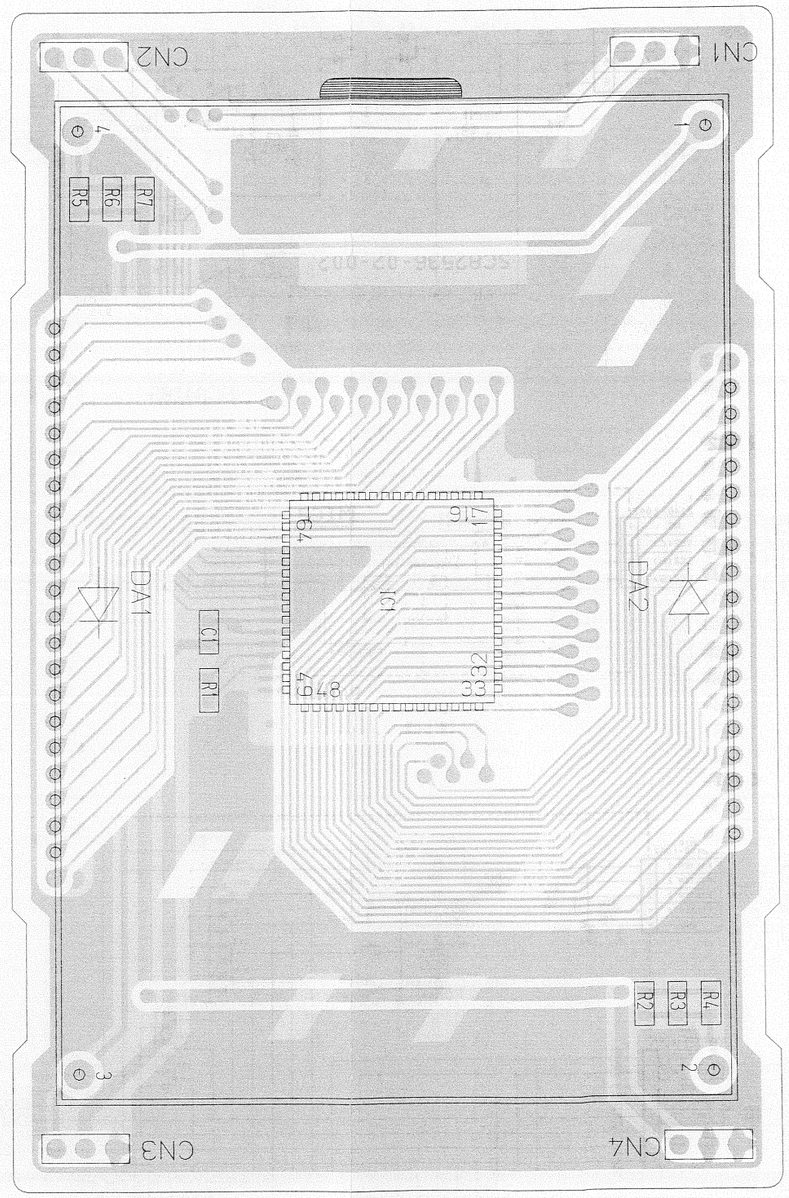

SC82536-02-002

4.29 MIC1 [1][3], MIC 2[4][1], SW1 [2][4], SW4 [2][7], OPERATIN [1][4], MEMORY [4][0], CN [3][8] BOARD SCHEMATIC DIAGRAMS

●MIC1

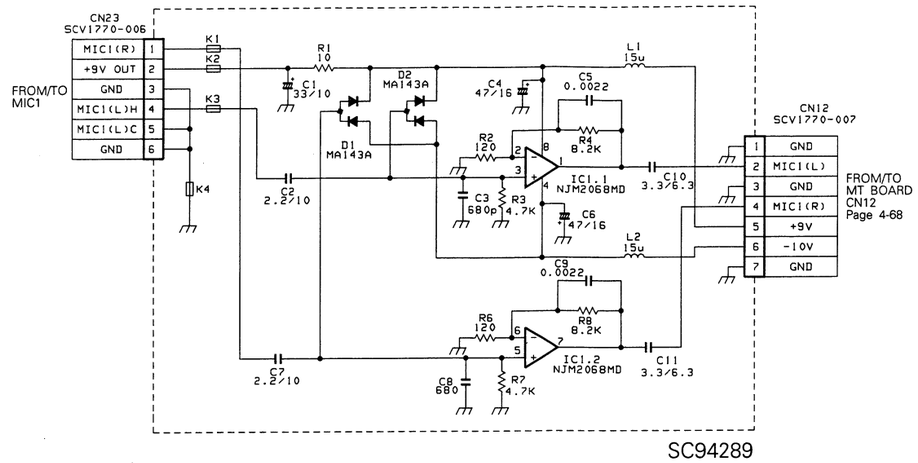

SC94289

●MIC2

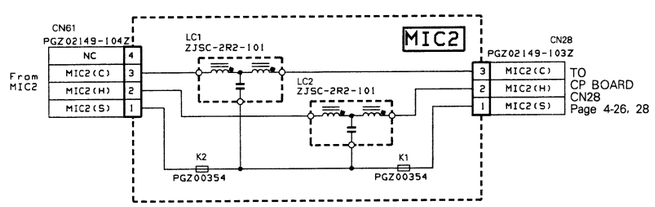

SC94289

●SW4

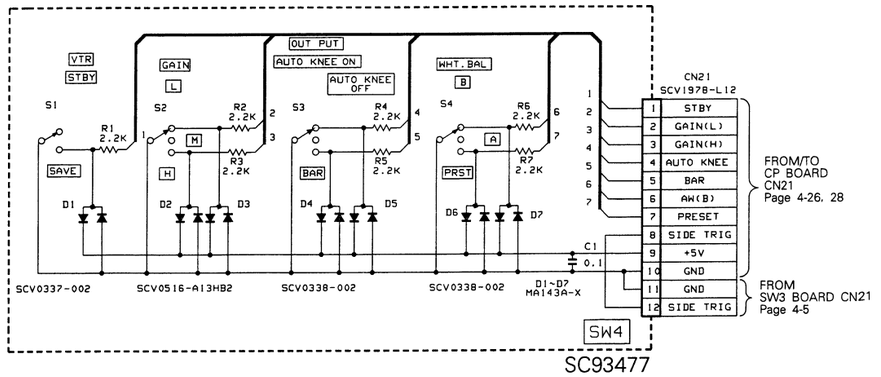

SC93477

●OPERATION

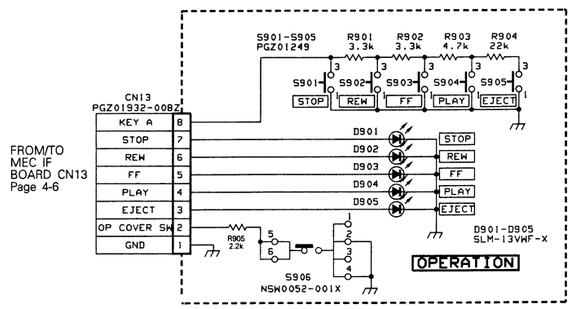

SC94288

●SW1

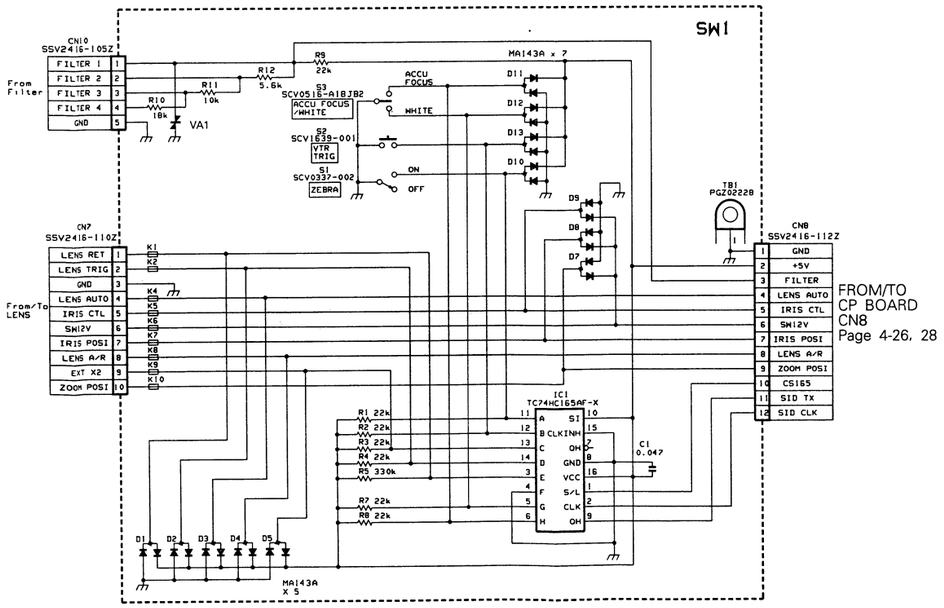

SC93479

●MEMORY

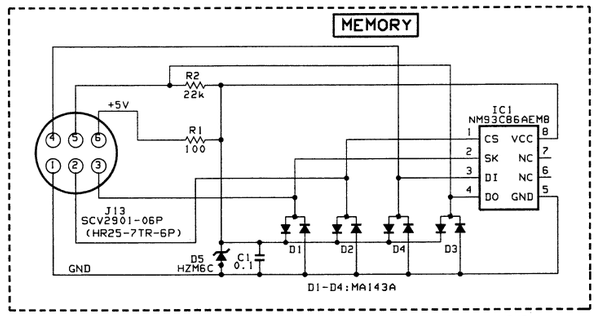

SC94290

●CN

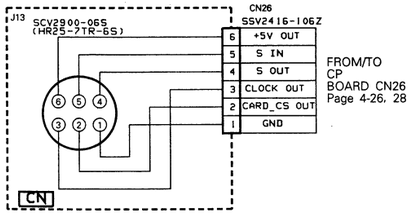

SC94290

●MIC1

– SIDE A –

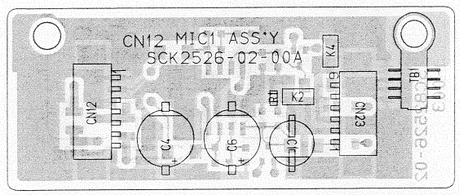

SC82526-02-003

– SIDE B –

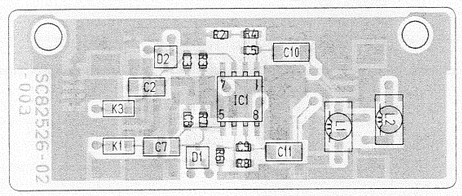

●SW1

– SIDE A –

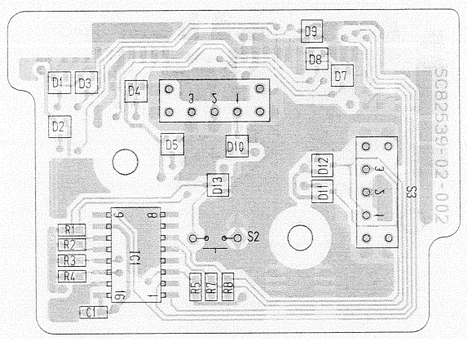

– SIDE B –

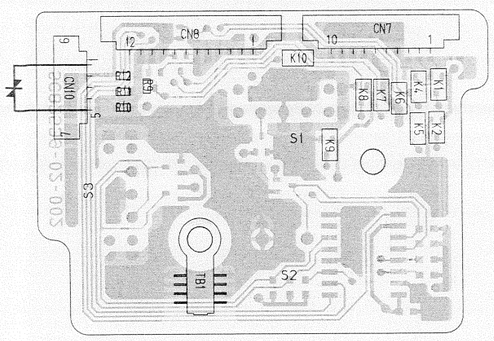

●SW4

– SIDE B –

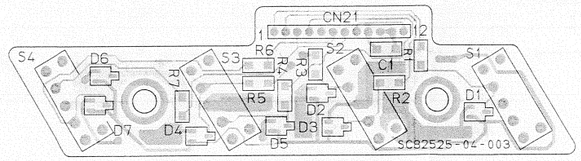

●OPERATION

– SIDE A –

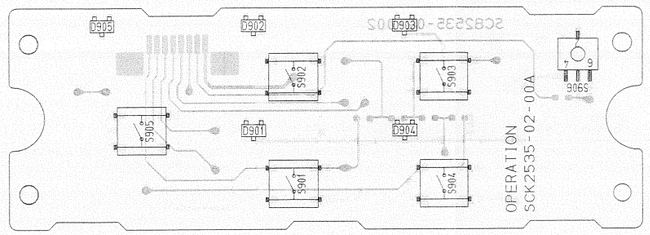

– SIDE B –

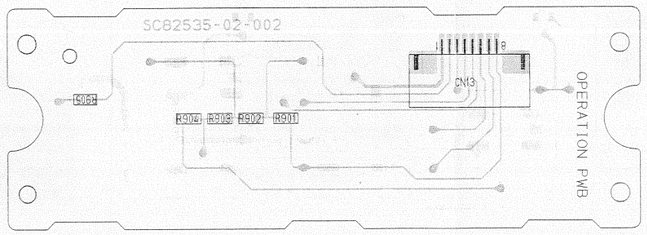

●MEC I/F

– SIDE A –

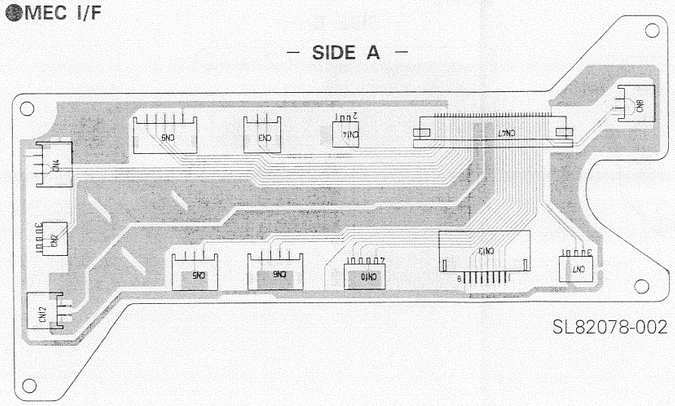

●MEMORY

– SIDE A –

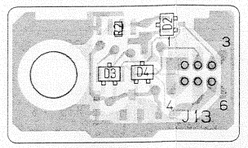

– SIDE B –

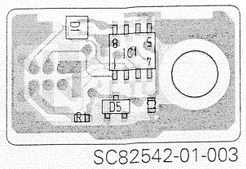

SC82542-01-003

●CN

– SIDE A –

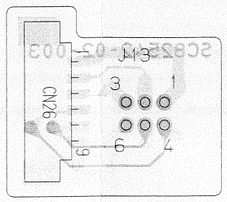

●LI-BATT

– SIDE A –

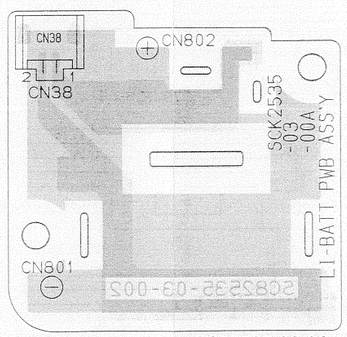

SC82535-03-001

●MIC2

– SIDE A –

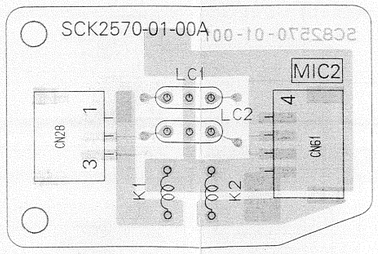

SC82570-01-001

4.31 I/O JUNC, EAR, SW2, SW3, SW5, SW6, TC.IN, TC.OUT, RM, MOM.OUT, GEN.IN CIRCUIT BOARD & I/O JUNC BOARD SCHEAMTIC DIAGRAM

●I/O JUNC

– SIDE B –

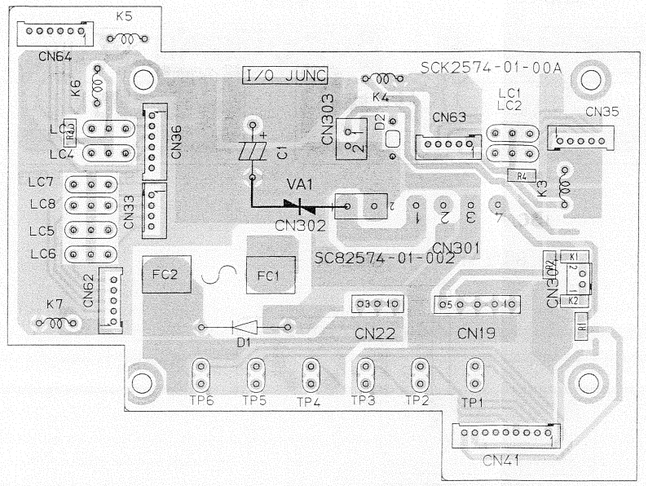

●I/O JUNC BOARD SCHEMATIC DIAGRAM 1 2

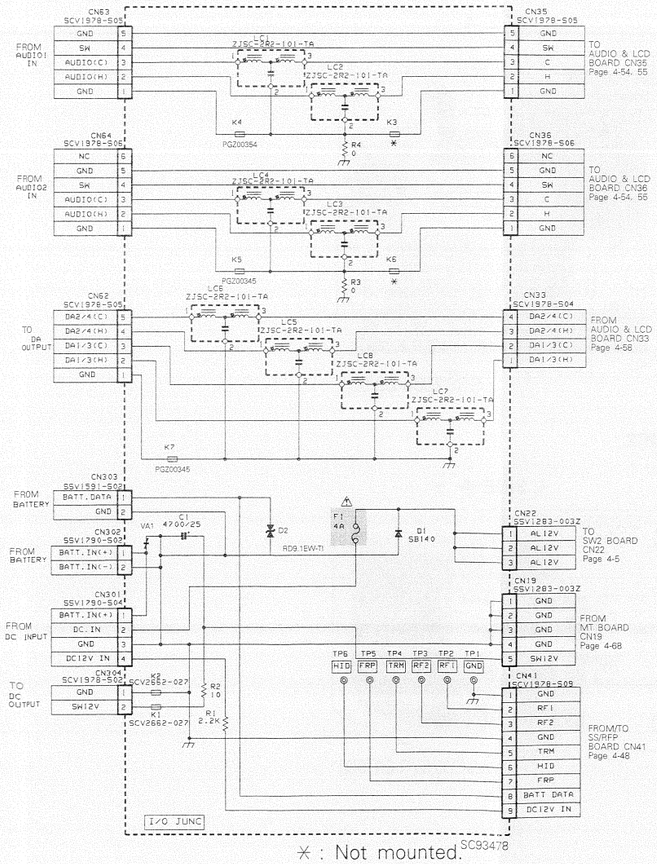

✳ : Not mounted.

●SW5

– SIDE A –

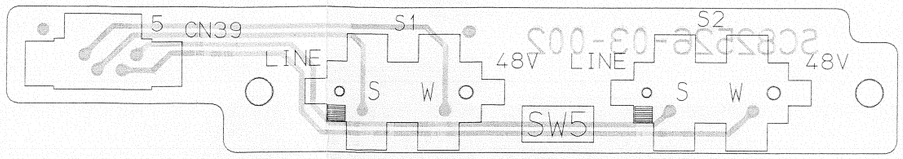

●SW6

– SIDE A –

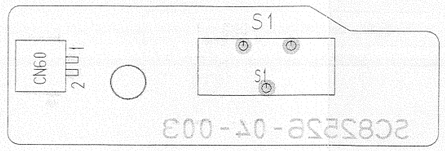

●TC.IN

– SIDE B –

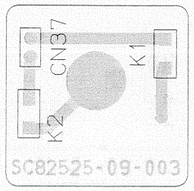

●EAR

– SIDE B –

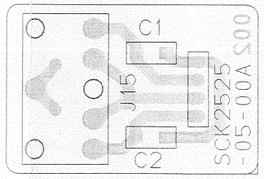

SC82525-05-001

●SW3

– SIDE B –

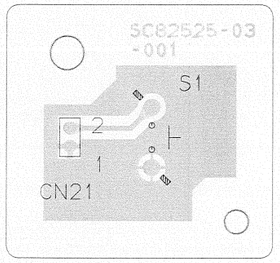

●RM

– SIDE B –

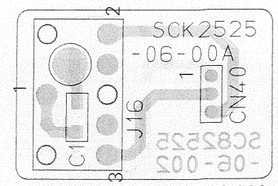

SC82525-06-002

●MON.OUT

– SIDE B –

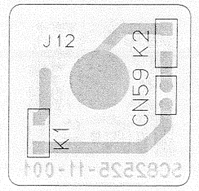

SC82525-11-001

●GEN.IN

– SIDE B –

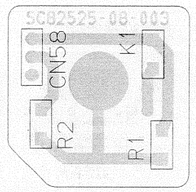

●TC.OUT

– SIDE B –

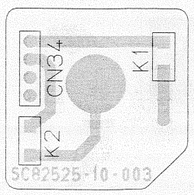

●SW2

– SIDE B –

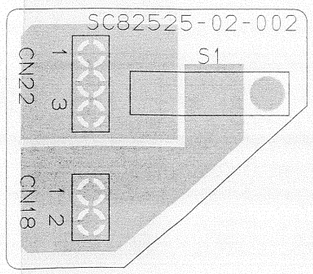

4-72

4.32 DRUM MDA SCHEMATIC DIAGRAM & CIRCUIT BOARD 1 6

✳ : Not mounted.

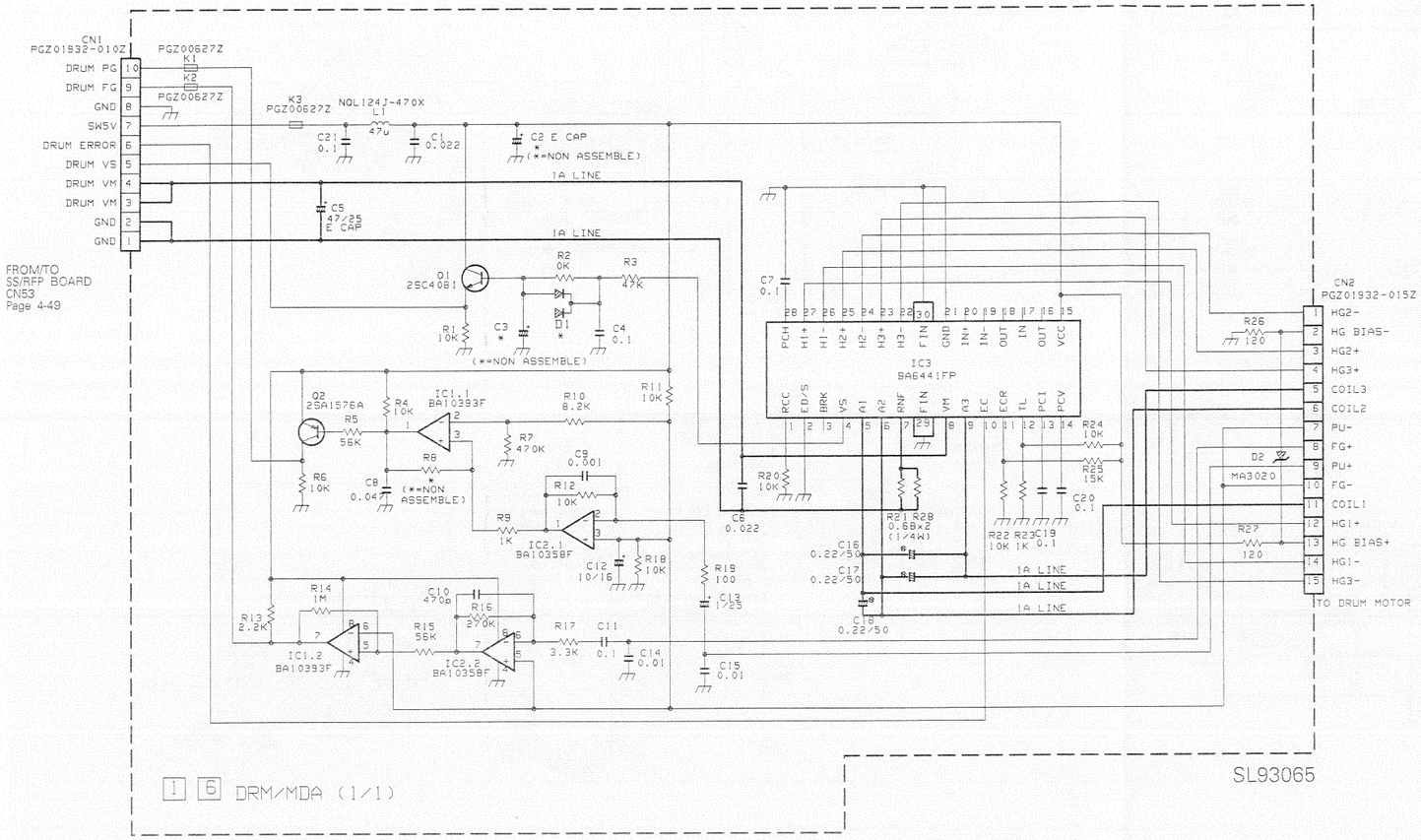

– SIDE A –

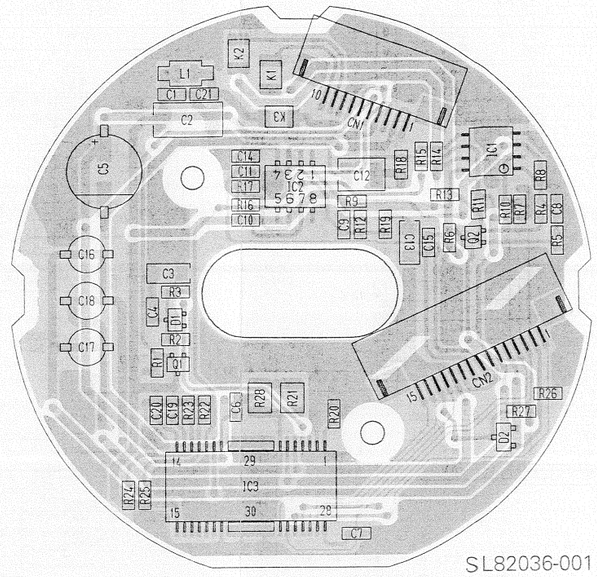

4.33 AL SENSE, TU SENSE, SP SESSE, MODE SENSE, A/C HEAD, BEGIN SENSE, END SENSE CIRCUIT BOARDS

●AL SENSE

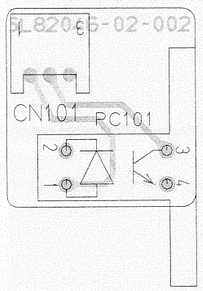

●TU SENSE

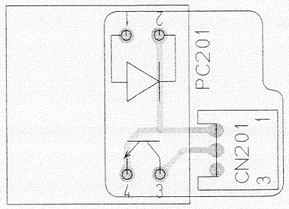

●SP SENSE

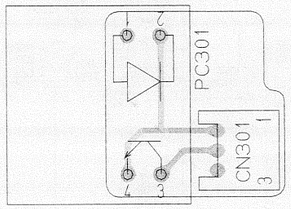

●MODE SENSE

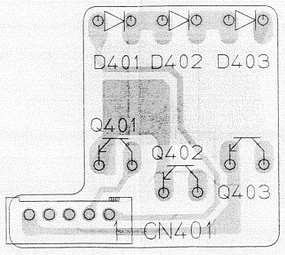

●A/C HEAD

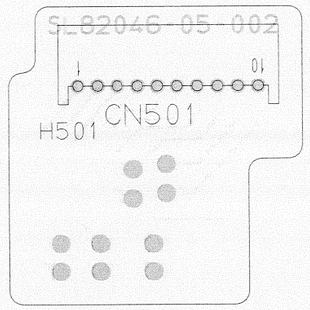

●BEGIN SENSE

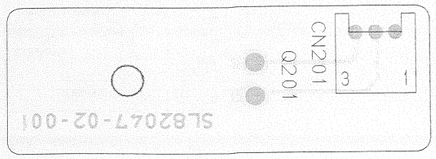

●END SENSE

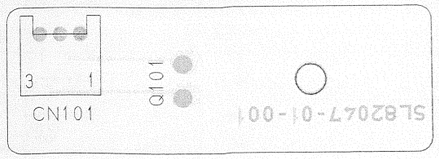

4.34 PS REFERENCE DIAGRAM

Note : When something is wrong with this circuit, replace it with a new assembly. Each component is not available as service parts.

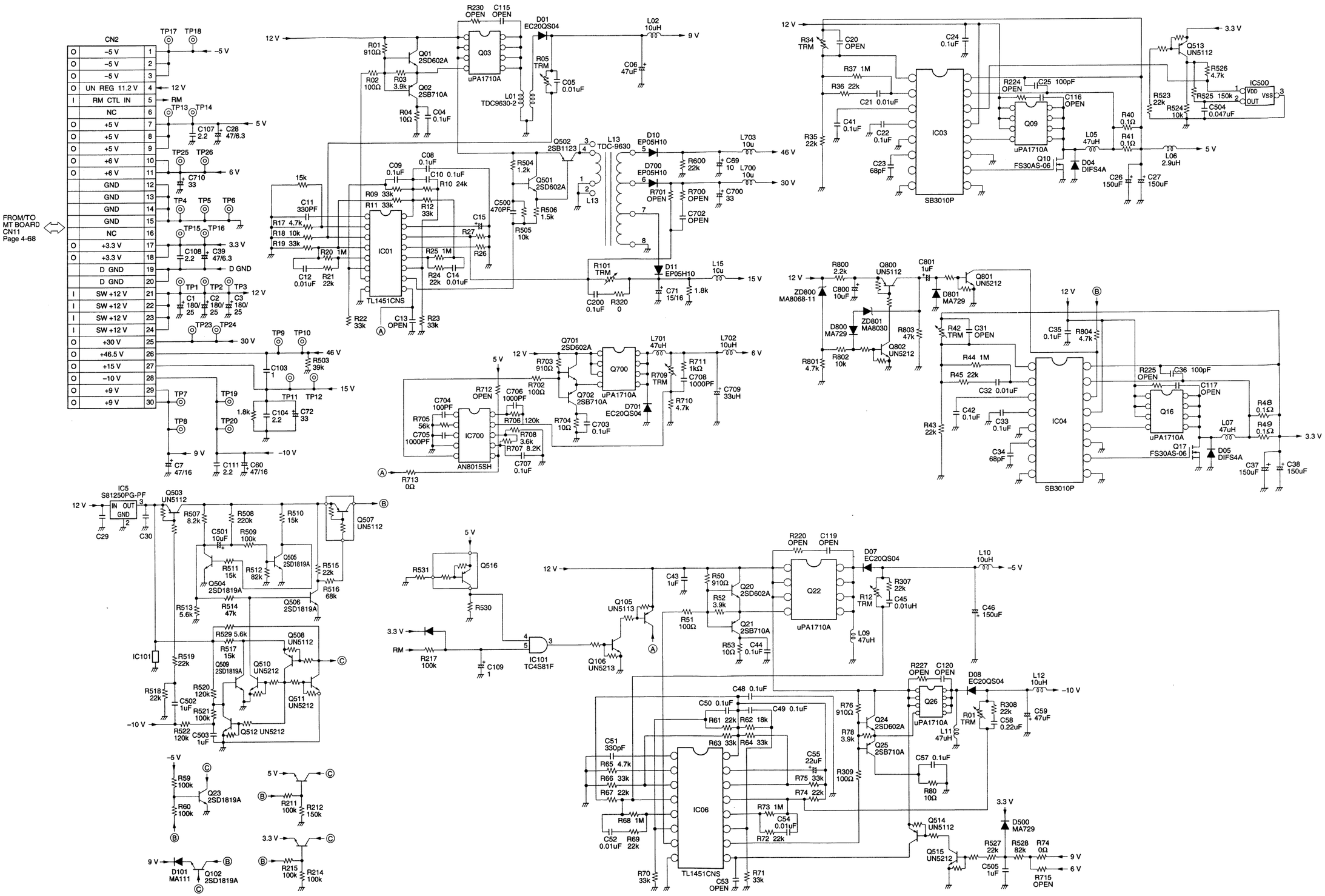

4-74

4.35 IC BLOCK DIAGRAMS

■ AD603AR-X [ANALOG DEVICES] (Variable Gain CTL Amplifier)

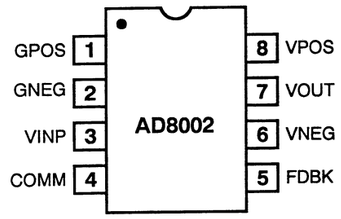

■ Pin funoction

Pin No.	Pin Name
1	GPOS Gain CTL Input "HI"
2	GNEG Gain CTL Input "LOW"
3	VINP Amp. Input
4	COMM GND
5	FDBK Feedback
6	VNEG Vss
7	VOUT Output
8	VPOS V_{DD}

■ AK4323VF-X [ASAHIKASEI] (20 Bit 2ch D/A Converter)

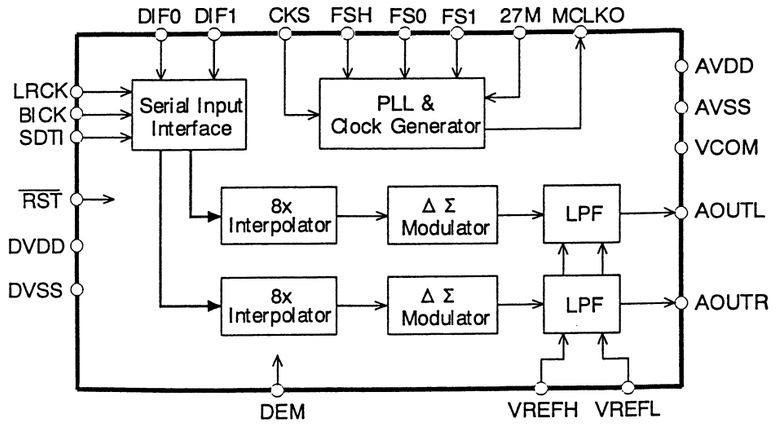

■ AN3730FA [MATSUSHITA] (Pre-Recoding Amplifire)

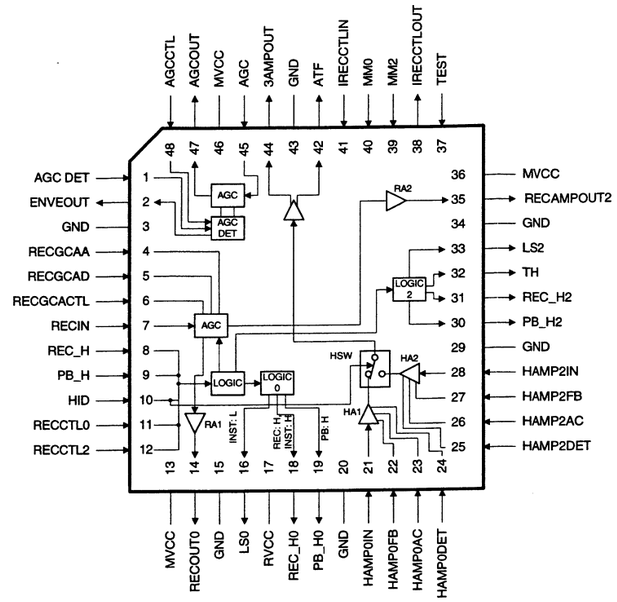

■ AK5340-VS [ASAHIKASEI] (18 bit 2Channel A/D Converter)

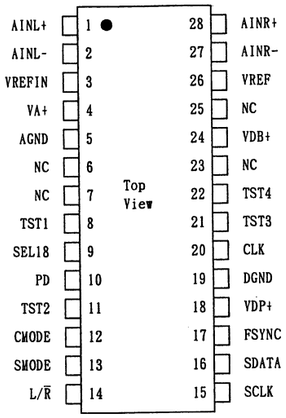

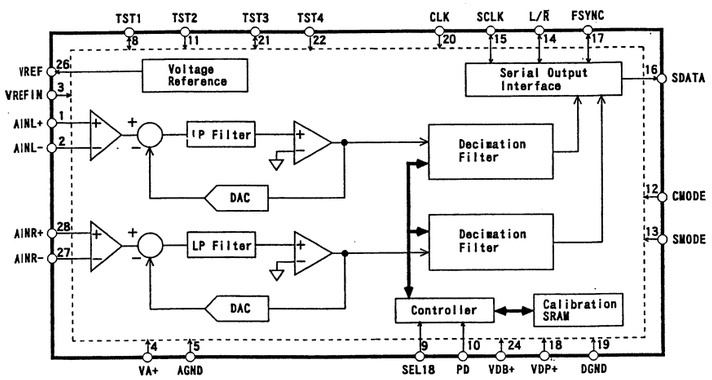

■ AD8011AR-X [ANALOG DEVICES] (Current Feedback Amplifier)

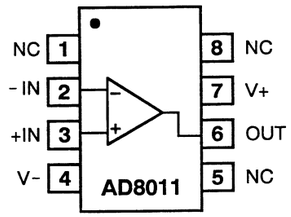

■ AD8041AR-XE [ANALOG DEVICES] (Op.Amplifier)

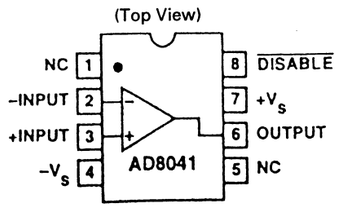

NC=Not connected

■ AN3740FAP [MATSUSHITA] (Playback Amplifire)

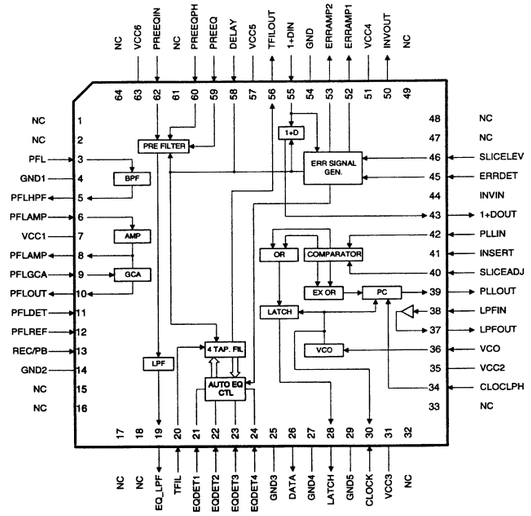

■ AD817AR-X [ANALOG DEVICES] (Hi-Speed Low Power Op.Amp.)

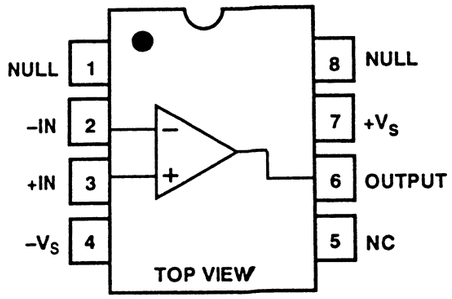

NC = NOT CONNECTED

4-75

■ AN77L03M-X [MATSUSHITA] (Voltage Regulator)

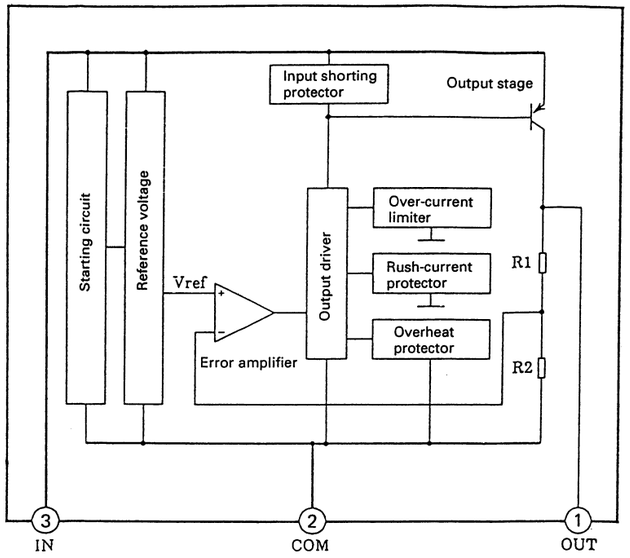

■ BA10358F-X [ROHM] (Dual Ground Sense Op.Amp.)

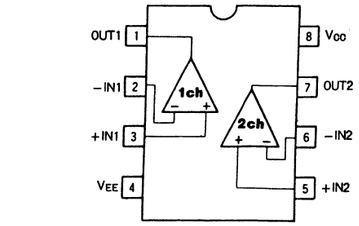

(Top View)

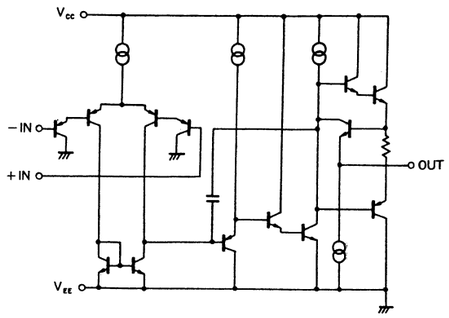

■ BA6285FP-X [ROHM] (Reversible Motor Driver)

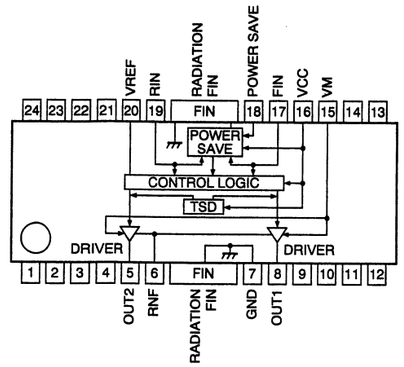

(Top View)

Pin No.	Symbol	Function
1	NC	
2	NC	
3	NC	
4	NC	
5	OUT 2	Motor drive output
6	RNF	GND for motor drive output
7	GND	GND
8	OUT 1	Motor drive output
9	NC	
10	NC	
11	NC	
12	NC	
13	NC	
14	NC	
15	VM	Power source for motor drive
16	VCC	
17	FIN	Logic input
18	POWER SAVE	Less than 0.8 V : Movement More than 2 V : Stand-by
19	RIN	Logic input
20	VREF	Motor drive output voltage (high level) setting
21	NC	
22	NC	
23	NC	
24	NC	
FIN	FIN	Connect the GND

NC : Not connected

■ BA7795FS-X [ROHM] (Audio Signal Processor)

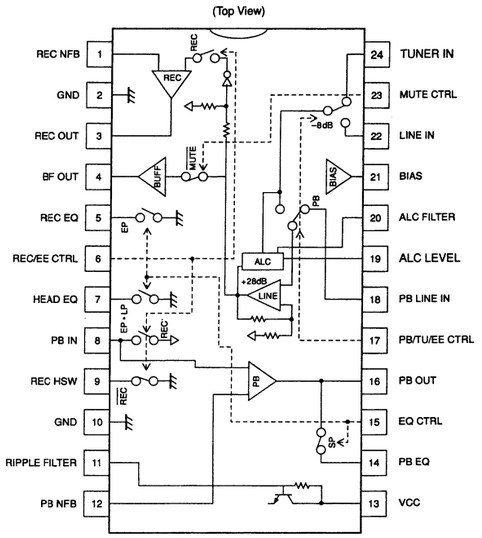

■ AN77L05M-X [MATSUSHITA] (Voltage Regulator)

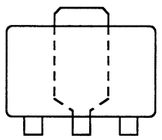

(Top View)

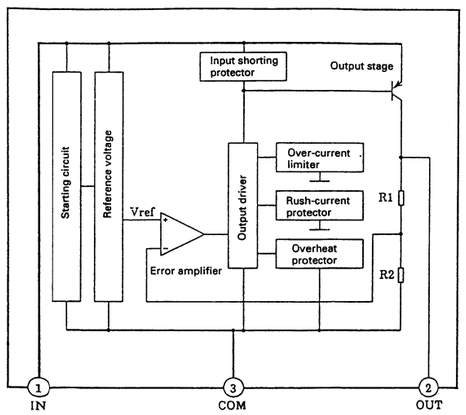

■ BA10393F-XE [ROHM] (Dual Comparator)

(Top View)

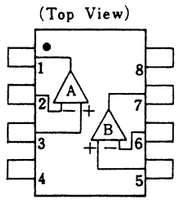

Pin

1. A OUTPUT
2. A−INPUT
3. A+INPUT
4. V⁻
5. B+INPUT
6. B−INPUT
7. B OUTPUT
8. V⁺

■ BA7043FS-X [ROHM] (VTR Auto Tracking Interface)

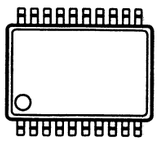

Pin No.	Function	Pin No.	Function
1	AUDIO FM IN	11	V/I RESISTOR
2	VFM/AFM CTL	12	SP/EP GAIN CTL
3	AMP OUT	13	CHARGED CAPACITOR
4	Not Connected	14	GND
5	HOLD CAPACITOR	15	EMV LEVEL ADJ.
6	DC/EMV CTL	16	EMV LEVEL DOWN
7	AUDIO FILTER IN	17	DC/EMV OUT
8	VIDEO FILTER IN	18	D F.F IN
9	VIDEO GAIN ADJ.	19	VCC
10	AUDIO GAIN ADJ.	20	VIDEO FM IN

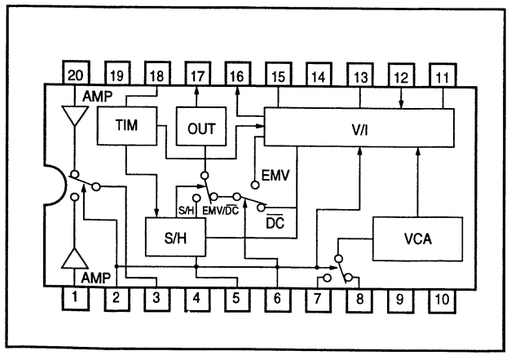

4-76

■ BA6441FP-X [ROHM]
(Motor Driver)

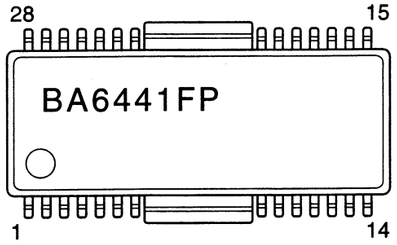

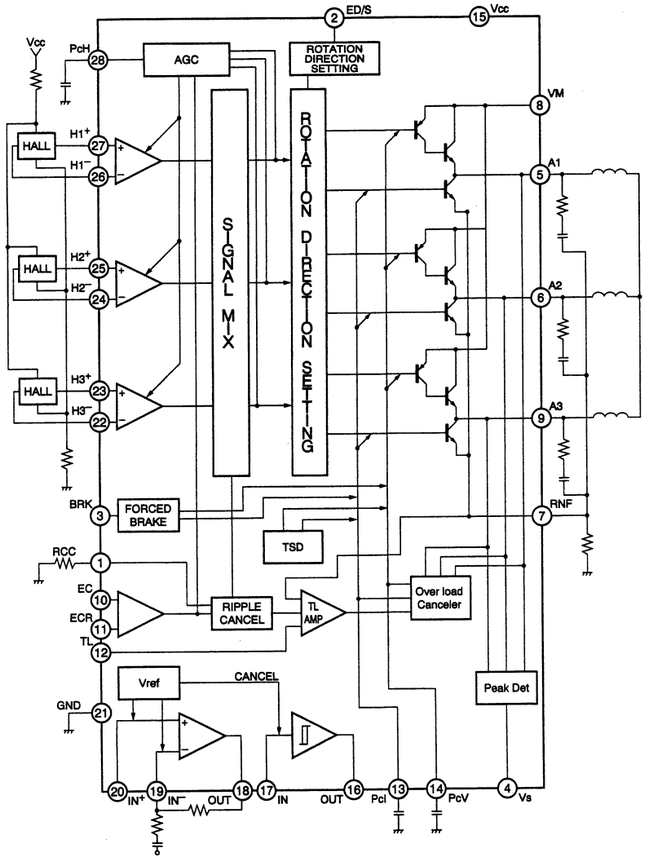

■ BA6862FS-X [ROHM]
(Motor Driver)

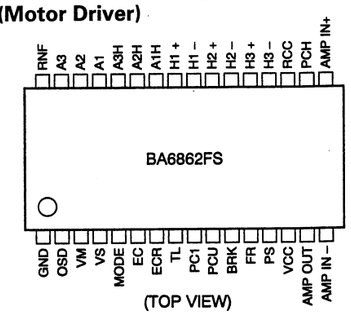

Pin No.	Symbol	Function
1	GND	GND
2	OSD	Output detect for short circuit
3	VM	Power source for motor drive
4	VS	Control for motor drive
5	MODE	Current/Voltage switching
6	EC	Torque control
7	ECR	Torque reference
8	TL	Torque limited
9	PCI	Output saturation prevent level (low level)
10	PCV	Output saturation prevent level (high level)
11	BRK	Break input H : Break L : Movement
12	FR	Foward/Reverse CTL input
13	PS	Power save H : Stand-by L : Movement
14	VCC	
15	AMP OUT	Amplifire output
16	AMP IN −	Amplifire input (−)
17	AMP IN +	Amplifire input (+)
18	PCH	Hole amp, AGC phase compareter
19	RCC	Ripple cancel
20	H3 −	Hole signal input
21	H3 +	Hole signal input
22	H2 −	Hole signal input
23	H2 +	Hole signal input
24	H1 −	Hole signal input
25	H1 +	Hole signal input
26	A1H	Pre motor drive output
27	A2H	Pre motor drive output
28	A3H	Pre motor drive output
29	A1	Motor drive output
30	A2	Motor drive output
31	A3	Motor drive output
32	RNF	GND for motor drive

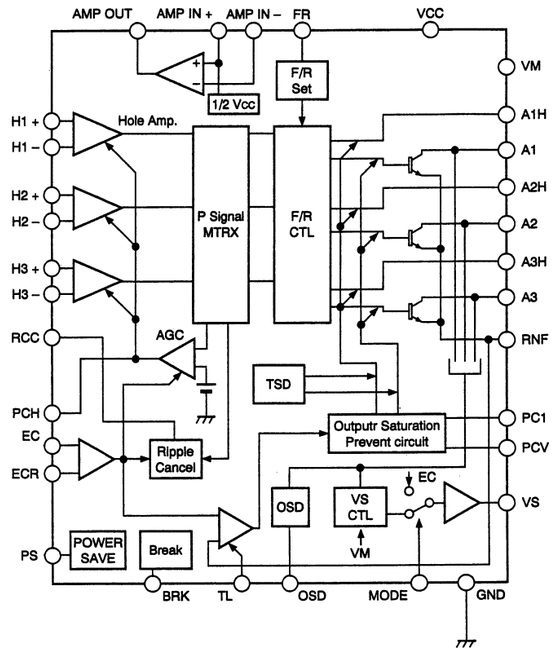

■ BU4094BCFV-X [ROHM]
(8-Stage Shift/Store Register)

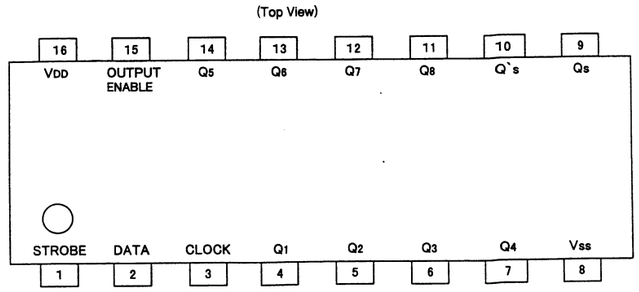

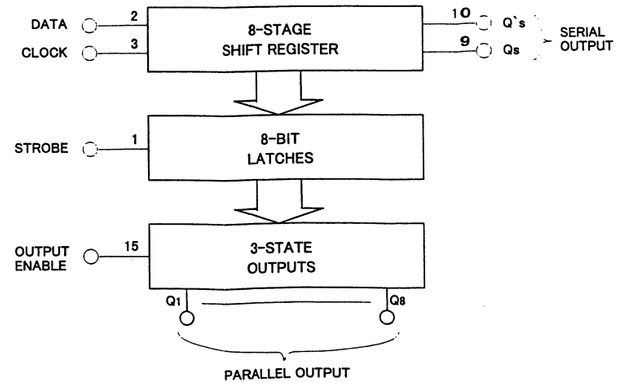

4-77

■ CLC450AJM5-X [NATIONAL SEMICONDUCTOR]
(Current Feedback Amplifier)

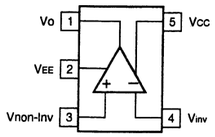

Top View

■ CLC452AJM5-X [NATIONAL SEMICONDUCTOR]
(Single Supply, Low-Power, High Output, Current Feedback Amplifier)

(Top View)

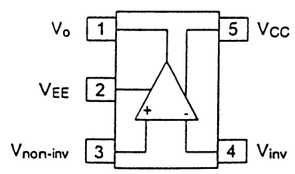

■ CY62256LL70SN-X [CYPRESS]
(32k x 8 Static RAM)

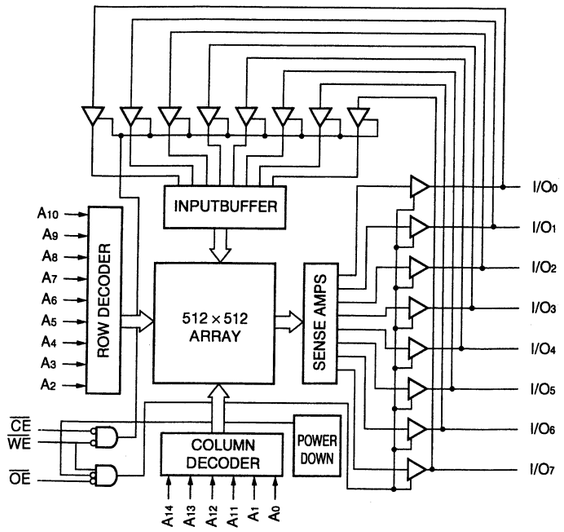

Top View

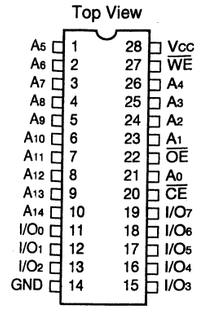

■ EPF10K10TC144-4 [ALTERA]
(PLD)

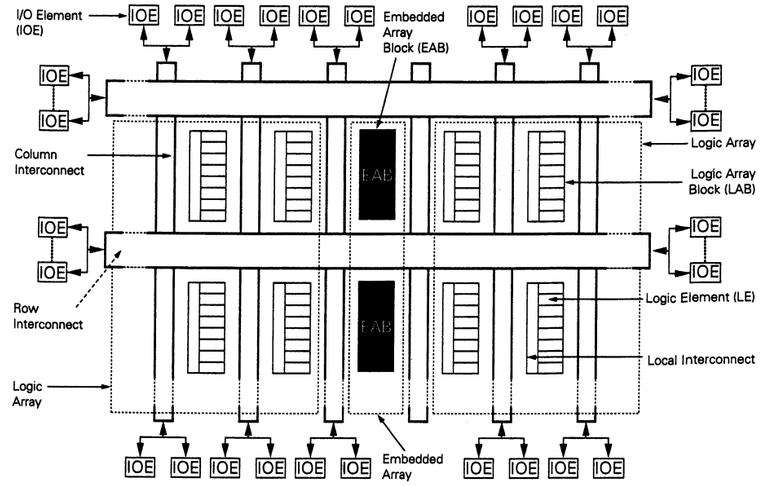

■ DS26C32ATM-X [National Semi Conductor]
(Quad Differential Line Receiver)

Dual-in-Line Package

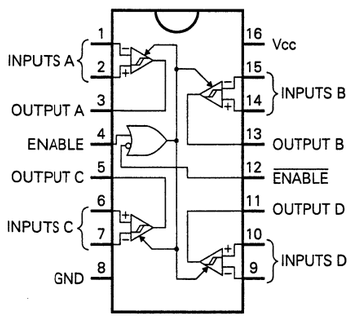

Top View

■ DS90LV031TM-X [NATIONAL SEMICONDUCTOR]
(3V LVDS Quad CMOS Differential Line Driver)

Dual-In-Line

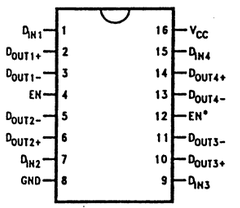

(TOP VIEW)

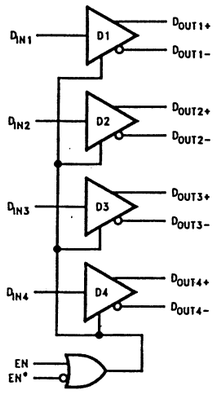

DRIVER

Enables		Input	Outputs	
EN	EN*	D_{IN}	$D_{OUT}+$	$D_{OUT}-$
L	H	X	Z	Z
All other combinations of ENABLE inputs		L	L	H
		H	H	L

■ DS90LV032TM-X [NATIONAL SEMICONDUCTOR]
(3V LVDS Quad CMOS Differential Line Receiver)

Dual-In-Line

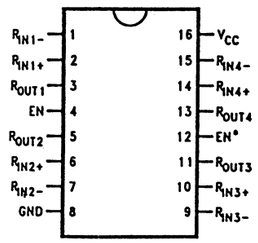

(TOP VIEW)

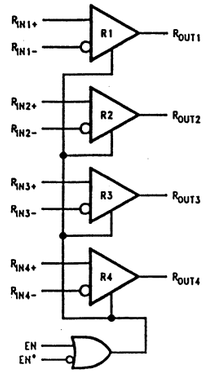

RECEIVER

ENABLES		INPUTS	OUTPUT
EN	EN*	$R_{IN+} - R_{IN-}$	R_{OUT}
L	H	X	Z
All other combinations of ENABLE inputs		$V_{ID} \geq 0.1V$	H
		$V_{ID} \leq -0.1V$	L
		Full Failsafe OPEN/SHORT or Terminated	H

■ EPM032VT-15-001 [ALTERA]
(Erasable Programmable Logic Devices)

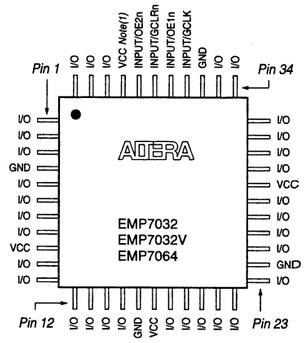

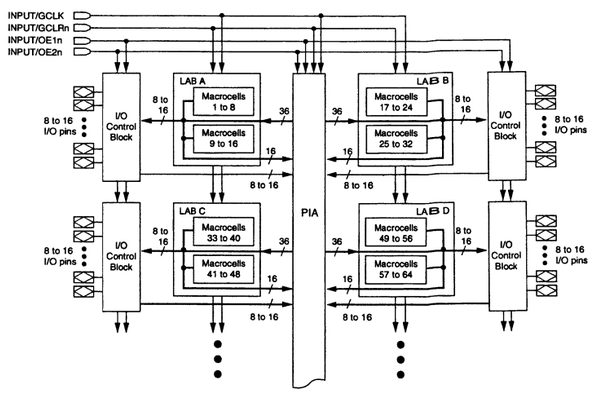

4-78

■ EPF10K20TC144-3 [ALTERA] (PLD CMOS SRAM)

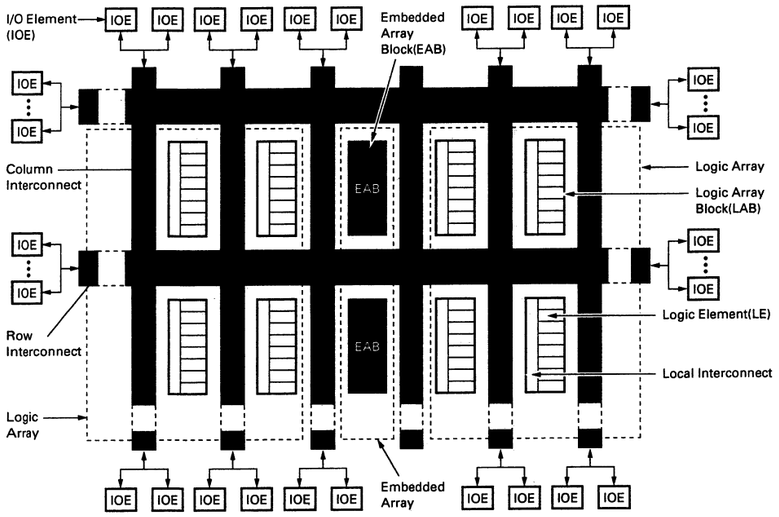

■ HM538254BTT-7 [HITACHI] (256k Word x 8 Bit CMOS Multiport RAM)

(Top View)

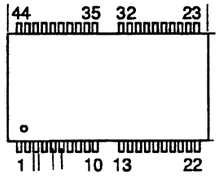

Pin Arrangement	Pin name			Pin Arrangement	Pin name		
	Supply voltage/ Clock	Input	Output		Supply voltage/ Clock	Input	Output
1	VCC			23	VSS		
2	SC			24		A3	
3			SI/O 0	25		A2	
4			SI/O 1	26		A1	
5			SI/O 2	27		A0	
6			SI/O 3	28			QSF
7	$\overline{DT}/\overline{OE}$			29	$\overline{CAS}$		
8			I/O 0	30	NC		
9			I/O 1	31	DSF1		
10			I/O 2	32	VSS		
11	NL			33	NL		
12	NL			34	NL		
13			I/O 3	35			I/O 4
14	VSS			36			I/O 5
15	$\overline{WE}$			37			I/O 6
16	$\overline{RAS}$			38			I/O 7
17		A8		39	$\overline{SE}$		
18		A7		40			SI/O 4
19		A6		41			SI/O 5
20		A5		42			SI/O 6
21		A4		43			SI/O 7
22	VCC			44	VSS		

■ JCL0028 [JVC] (Shuffling Memory Control)

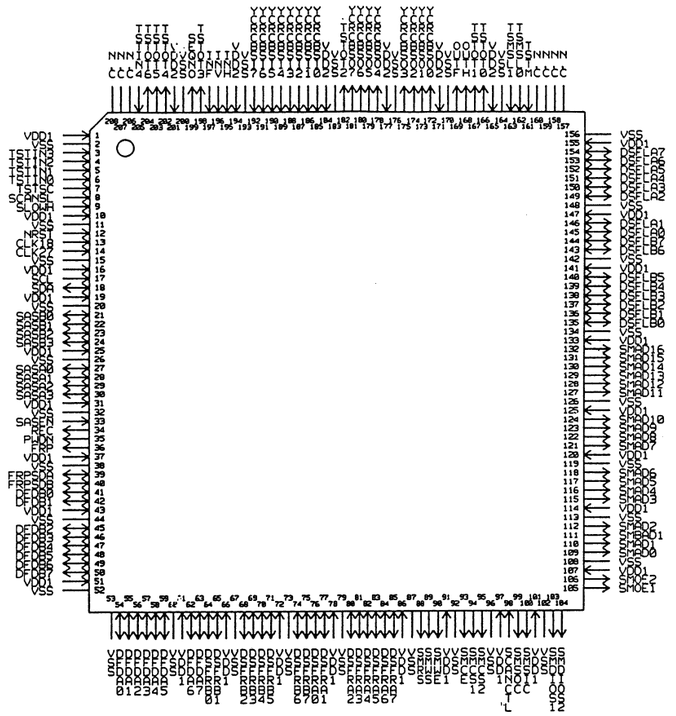

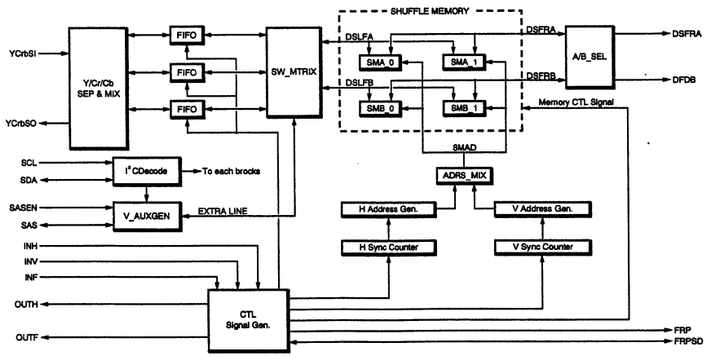

■ JCL0029 [JVC] (Digital Channel Integrated Circuit (DCI) for Recoding)

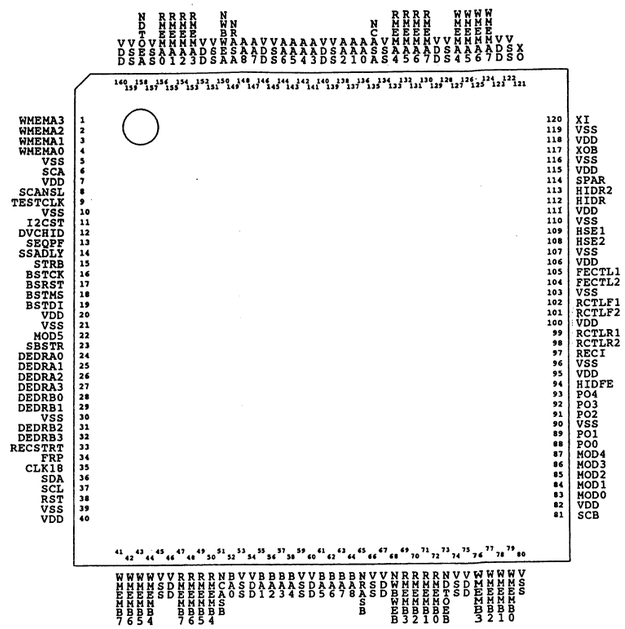

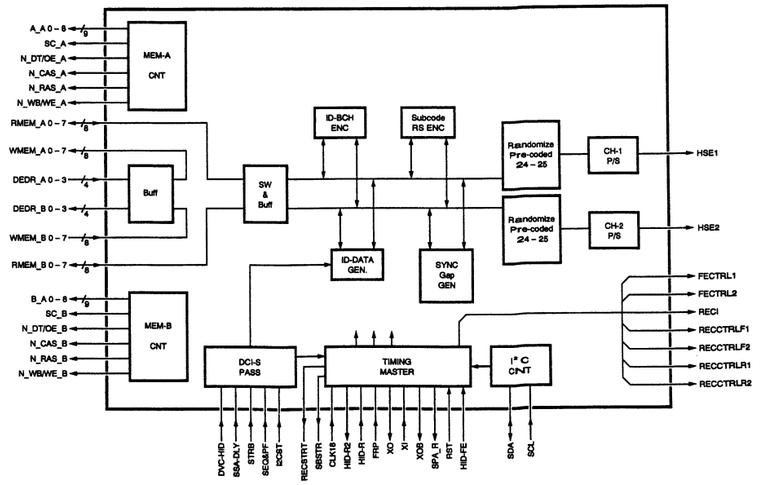

4-79

■ PLSC1238 [JVC]
PLSC1246
PLSC1256
(512K (64K x 8 Chip Erase) Flash Memory)

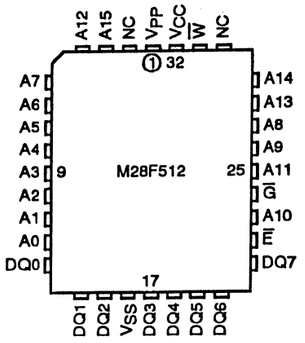

(Top View) NC=Not Connected

Signal Names

A0 - A15	Address Inputs
DQ0 - DQ7	Data Inputs / Outputs
$\overline{E}$	Chip Enable
$\overline{G}$	Output Enable
$\overline{W}$	Write Enable
V_{PP}	Program Supply
V_{CC}	Supply Voltage
V_{SS}	Ground

Logic Diagram

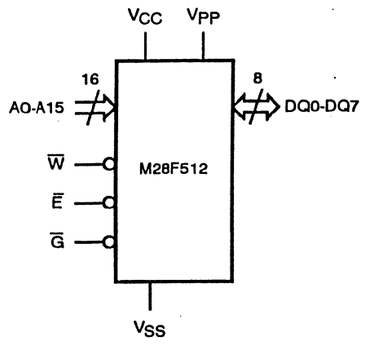

■ L7A1433 [LSI LOGIC]
(Error Correcting Codes (ECC))

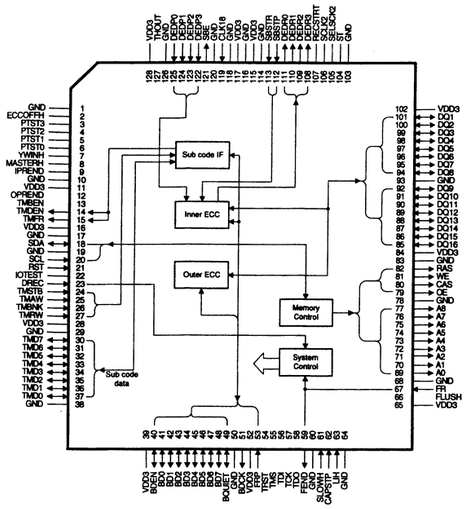

Pin No.	Label	In/Out	Description
1	GND	-	Ground
2	ECCOFFH	-	Not used (Low fixed)
3	PTST3	-	Not used (Low fixed)
4	PTST2	-	Not used (Low fixed)
5	PTST1	-	Not used (Low fixed)
6	PTST0	-	Not used (Low fixed)
7	TWINH	-	Not used (Low fixed)
8	MASTERH	-	Not used (Low fixed)
9	IPREND	-	Not used (Low fixed)
10	GND	-	Ground
11	VDD3	-	Power supply (+3V)
12	OPREND	-	Not used
13	TMBEN	-	Not used
14	TMDEN	Out	Communication enable of sub code bus
15	TMFR	Out	Frame detect (1st track: H)
16	VDD3	-	Power supply (+3V)
17	GND	-	Ground
18	SDA	In/Out	Data for IIC
19	GND	-	Ground
20	SCL	In	Clock for IIC
21	RST	In	System reset
22	IOTEST	-	Not used (High fixed)
23	DREC	In	Signal REC: H
24	TMSTB	In	Data strobe of sub code bus
25	TMAW	In	Address strobe of sub code bus
26	TMBNK	In	Bank select
27	TMRW	In	Read/Write of sub code bus (Write: H)
28	VDD3	-	Power supply (+3V)
29	GND	-	Ground
30	TMDT7	In/Out	Addersa and data of sub code bus
31	TMDT6	In/Out	
32	TMDT5	In/Out	
33	TMDT4	In/Out	
34	TMDT3	In/Out	
35	TMDT2	In/Out	
36	TMDT1	In/Out	
37	TMDT0	In/Out	
38	GND	-	Ground
39	VDD3	-	Power supply (+3V)
40	BDEN	In/Out	DV bus data enable
41	BD0	In/Out	DV bus data (9 MHz/8 bit)
42	BD1	In/Out	
43	BD2	In/Out	
44	BD3	In/Out	
45	BD4	In/Out	
46	BD5	In/Out	
47	BD6	In/Out	
48	BD7	In/Out	
49	BQUIET	In/Out	DV bus busy
50	GND	-	Ground
51	BDCK	Out	DV bus data clock (9 MHz)
52	VDD3	-	Power supply (+3V)
53	FRP	In	Frame pulse
54	TRST	-	-
55	TMS	-	-
56	TDI	-	-
57	TCK	-	-
58	TDO	-	-
59	FEND	Out	Frame end pulse for slow and still
60	GND	-	Ground
61	SLOWH	In	Slow mode flag (Slow mode: H)
62	CAPSTP	In	Capstan stop flag (Capstan stop mode: H)
63	LIH	In	Interval slow or linear slow flag (Linear slow mode: H)
64	GND	-	Ground
65	VDD3	-	Power supply (+3V)
66	FLUSH	-	Data transition pulse for field advance (Not used)
67	FR	In	Capstan foward/reverse (REV: H)
68	GND	-	Ground
69	A0	Out	(A0: LSB)
70	A1	Out	
71	A2	Out	
72	A3	Out	
73	A4	Out	Memory address (9 MHz)
74	A5	Out	
75	A6	Out	
76	A7	Out	
77	A8	Out	(A8: MSB)
78	GND	-	Ground
79	OE	Out	Memory output enable (active: L)
80	CAS	Out	Memory column address strobe
81	WE	Out	Memory write enable (active: L)
82	RAS	Out	Memory row address strobe
83	GND	-	Ground
84	VDD3	-	Power supply (+3V)
85	DQ16	In/Out	(DQ16: MSB)
86	DQ15	In/Out	Memory data (16 bit)
87	DQ14	In/Out	
88	DQ13	In/Out	
89	DQ12	In/Out	
90	DQ11	In/Out	Mamory data (16 bit)
91	DQ10	In/Out	
92	DQ9	In/Out	
93	GND	-	Ground
94	DQ8	In/Out	
95	DQ7	In/Out	
96	DQ6	In/Out	Memory data (16 bit)
97	DQ5	In/Out	
98	DQ4	In/Out	
99	DQ3	In/Out	
100	DQ2	In/Out	
101	DQ1	In/Out	(DQ1: LSB)
102	VDD3	-	Power supply (+3V)
103	GND	-	Ground
104	ST	-	Not used (Low fixed)
105	SELSCK2	-	Not used (Low fixed)
106	SCLK2	-	Not used (Low fixed)
107	RECSTRT	In	REC track start pulse
108	DEDR3	Out	(DEDR3: MSB)
109	DEDR2	Out	REC data to DCI (9 MHz/4 bit)
110	DEDR1	Out	
111	DEDR0	Out	(DEDR0: LSB)
112	SBSTP	In	Sync. block start pulse (PB)
113	SBSTR	In	Sync. block start pulse (REC)
114	GND	-	Ground
115	VDD3	-	Power supply (+3V)
116	GND	-	Ground
117	VDD3	-	Power supply (+3V)
118	GND	-	Ground
119	CLK18	In	System clock input (18 MHz) from CLK OSC IC (IC401)
120	GND	-	Ground
121	SBE	Out	Sync block error
122	DEDP3	In	(DEDP3: MSB)
123	DEDP2	In	PB data from DCI (9MHz/4 bit)
124	DEDP1	In	
125	DEDP0	In	(DEDP0: LSB)
126	GND	-	Ground
127	THOUT	-	Not used
128	VDD3	-	Power supply (+3V)

■ LM1881M-X [National Semiconductor]
(Video Sync Separator)

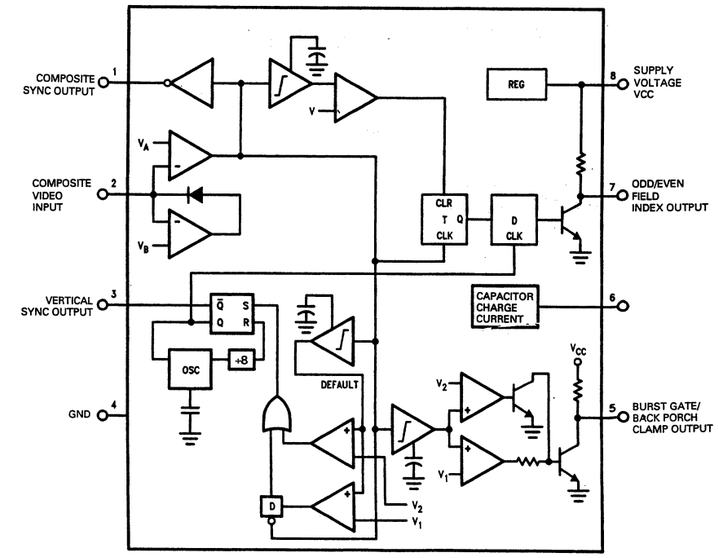

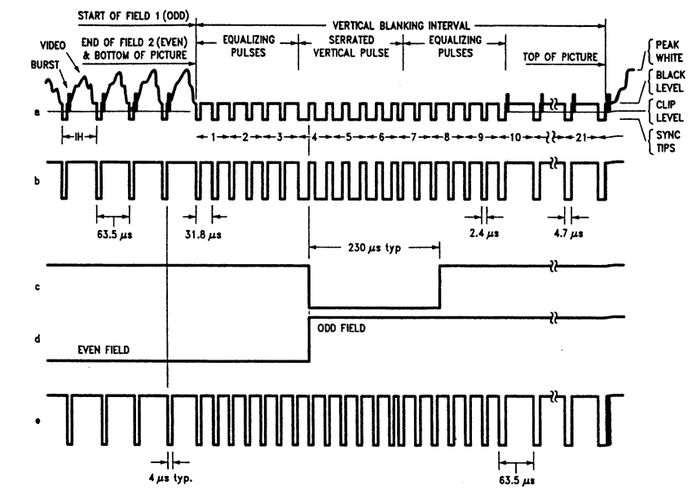

(a) Composite Video; (b) Composite Sync; (c) Vertical Output Pulse; (d) Odd/Even Field Index; (e) Burst Gate/Back Porch Clamp

4-80

■ M5201FP-X [MITSUBISHI] (Switch Op Amp.)

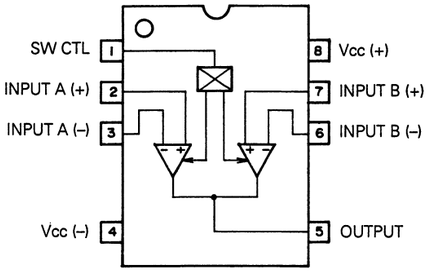

TRUE TABLE

SW CTL	OUTPUT
H	A
L	B

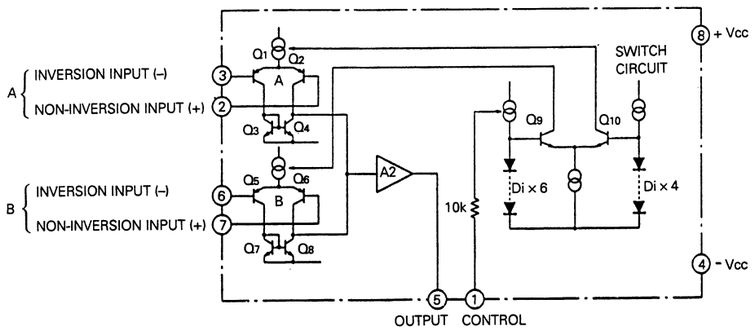

■ M5218AFP-X [MITSUBISHI] (Dual Op.Amp.)

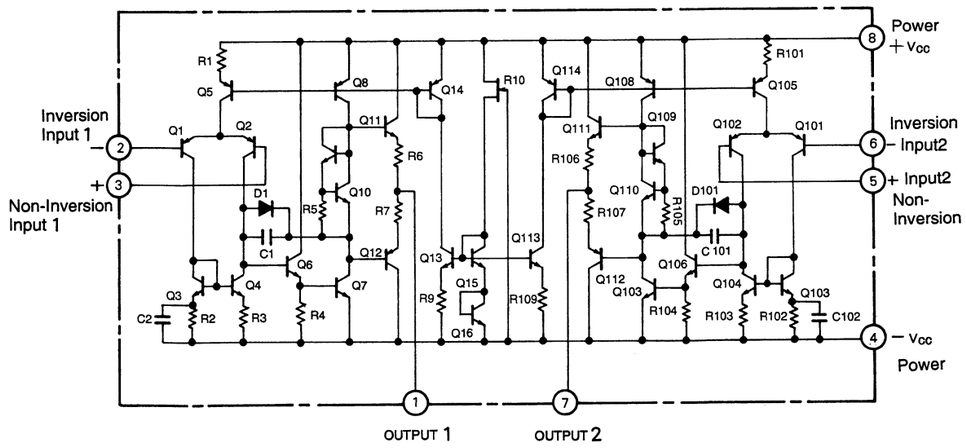

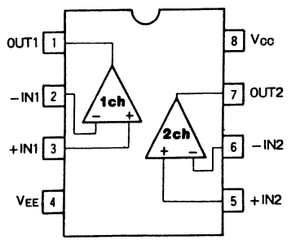

■ M52660FP [MITSUBISHI] (3 Channel VCO)

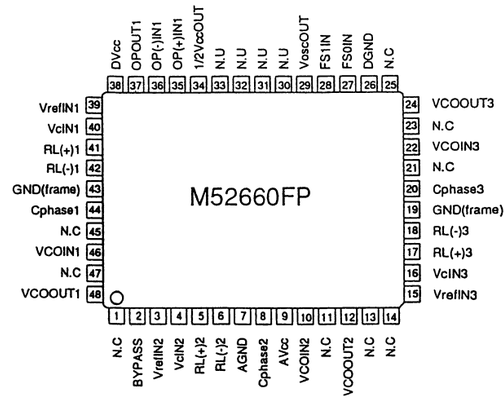

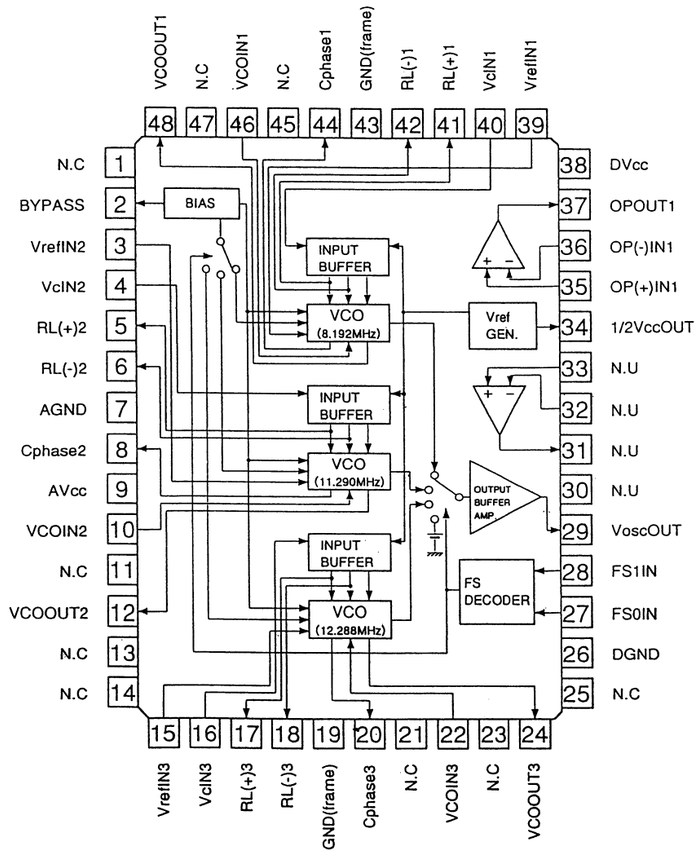

■ M5282FP-X [MITSUBISHI] (VCA and Op Amp.)

(TOP VIEW)

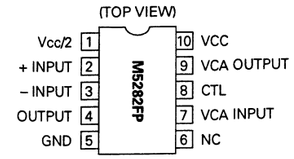

(BLOCK DIAGLAM)

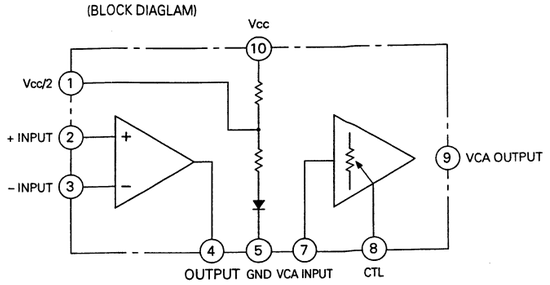

4-81

■ M62353GP-X [MITSUBISHI]
(8-Bit 8-Channel D/A Converter)

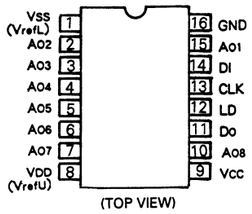

(TOP VIEW)

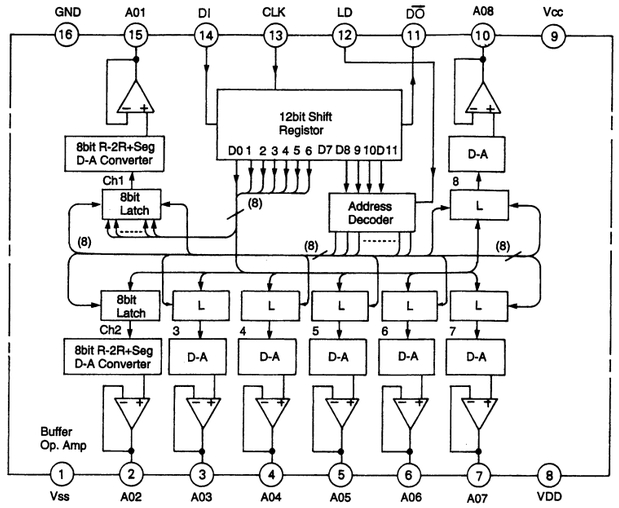

■ M65401FP [MITSUBISHI]
(Digital Signal Processor for Audio Signal)

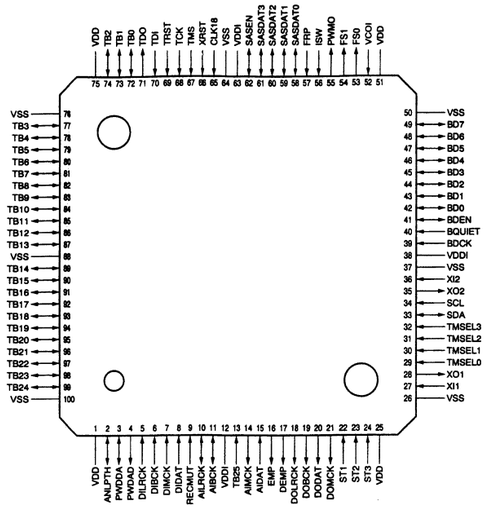

Pin Number	Pin Name	Function	I/O
1	VDD	Outer Power	–
2	ANLPTH	Analog loop through(H:through)	B
3	PWDDA	Power down for DAC(L:power down)	B
4	PWDAD	Power down for ADC(L:power down)	O
5	DILRCK	L/R clock from Digital In	I
6	DIBCK	Bit clock from Digital In	I
7	DIMCK	Master clock from Digital In	I
8	DIDAT	Serial Data from Digital In	I
9	RECMUT	Rec Data Mute	I
10	AILRCK	L/R clock for ADC	B
11	AIBCK	Bit clock for ADC	B
12	VDDI	Inner Power	–
13	TB[25]	Test Bus	I
14	AIMCK	Master clk for ADC(256 • fs)	O
15	AIDAT	Serial Data from ADC	I
16	EMP	ADC emphasis control	O
17	DEMP	DAC De-emphasis contro	O
18	DOLRCK	L/R clock for DAC/D-OUT	O
19	DOBCK	Bit clock for DAC/D-OUT	O
20	DODAT	Serial Data for DAC/D-OUT	O
21	DOMCK	Master clock for DAC/D-OUT(256 • fs)	O
22	ST1	Scan Test Mode Select(L:enable)	I
23	ST2	Scan Test Clock	I
24	ST3	Scan Test Data Input	I
25	VDD	Outer Power	–
26	VSS	GND	–
27	XI1	12.288MHz X'tal port(48kHz)	I
28	XO1	12.288MHz X'tal port(48kHz)	O
29	TMSEL[0]	Test Mode Select	I
30	TMSEL[1]	Test Mode Select	I
31	TMSEL[2]	Test Mode Select	I
32	TMSEL[3]	Test Mode Select	I
33	SDA	I2C data line	B
34	SCL	I2C clock line	I
35	XO2	8.192MHz X'tal port(32kHz)	O
36	XI2	8.192MHz X'tal port(32kHz)	I
37	VSS	GND	–
38	VDDI	Inner Power	–
39	BDCK	DVC bus clock	I
40	BQUIET	DVC bus control	I
41	BDEN	DVC bus enable	B
42	BD[0]	DVC bus data	B
43	BD[1]	DVC bus data	B
44	BD[2]	DVC bus data	B
45	BD[3]	DVC bus data	B
46	BD[4]	DVC bus data	B
47	BD[5]	DVC bus data	B
48	BD[6]	DVC bus data	B
49	BD[7]	DVC bus data	B
50	VSS	GND	–

Pin Number	Pin Name	Function	I/O
51	VDD	Outer Power	–
52	VCOI	VCO clock input for PLL	I
53	FS[0]	Fs select for VCO	O
54	FS[1]	Fs select for VCO	O
55	PWMO	Phase comparator output of PLL	O
56	ISW	1mA or 4mA Change Control ("H":4mA,"L":1mA)	I
57	FRP	Frame Start from Shuffling	I
58	SASDAT[0]	Line Data to/from Shuffling	B
59	SASDAT[1]	Line Data to/from Shuffling	B
60	SASDAT[2]	Line Data to/from Shuffling	B
61	SASDAT[3]	Line Data to/from Shuffling	B
62	SASEN	Line Data Enable to Shuffling	B
63	VDDI	Inner Power	–
64	VSS	GND	–
65	CLK18	Master clock (18MHz)	I
66	XRST	Reset (L:reset)	I
67	TMS	Boundary Scan Test (Test Mode Select)	I
68	TCK	Boundary Scan Test (Test Clock)	I
69	TRST	Boundary Scan Test (Test Reset)	I
70	TDI	Boundary Scan Test (Test Data Input)	I
71	TDO	Boundary Scan Test (Test Data Output)	O
72	TB[0]	Test Bus	B
73	TB[1]	Test Bus	B
74	TB[2]	Test Bus	B
75	VDD	Outer Power	–
76	VSS	GND	–
77	TB[3]	Test Bus	B
78	TB[4]	Test Bus	B
79	TB[5]	Test Bus	B
80	TB[6]	Test Bus	B
81	TB[7]	Test Bus	B
82	TB[8]	Test Bus	B
83	TB[9]	Test Bus	B
84	TB[10]	Test Bus	B
85	TB[11]	Test Bus	B
86	TB[12]	Test Bus	B
87	TB[13]	Test Bus	B
88	VSS	GND	–
89	TB[14]	Test Bus	B
90	TB[15]	Test Bus	B
91	TB[16]	Test Bus	B
92	TB[17]	Test Bus	B
93	TB[18]	Test Bus	B
94	TB[19]	Test Bus	B
95	TB[20]	Test Bus	B
96	TB[21]	Test Bus	B
97	TB[22]	Test Bus	B
98	TB[23]	Test Bus	B
99	TB[24]	Test Bus	B
100	VSS	GND	–

■ M66312FP-W [MITSUBISHI]
(8 Bit LED Driver with Shift Register and Latched 3-State Outputs)

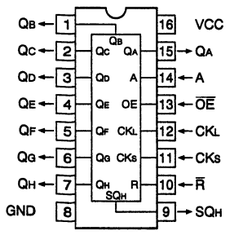

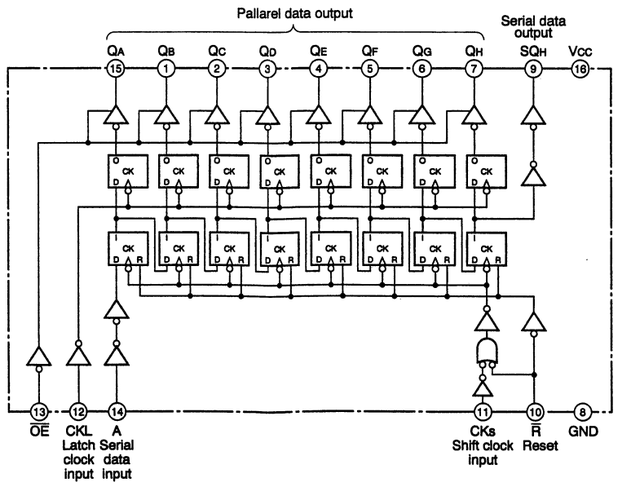

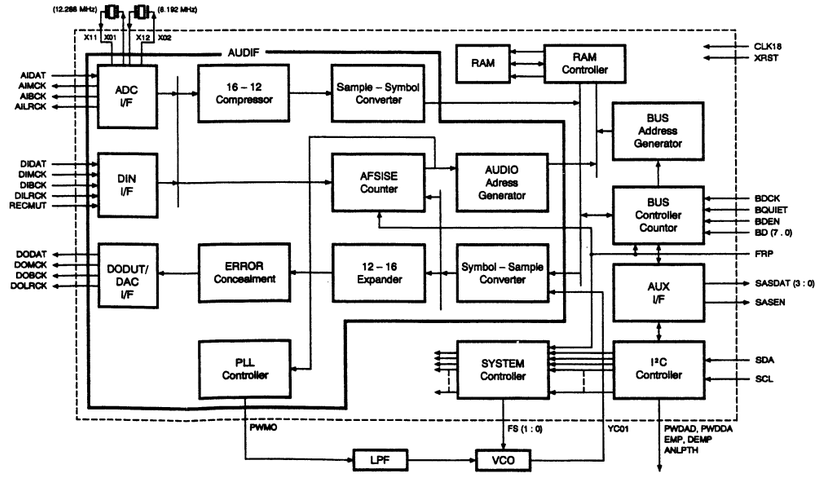

4-82

■ MB3782PF-X [FUJITSU] (Switching Regulator Controller)

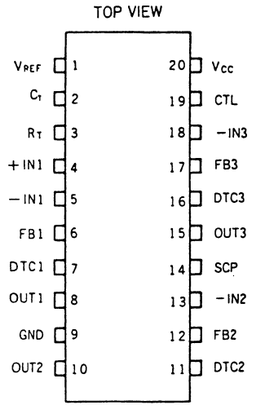

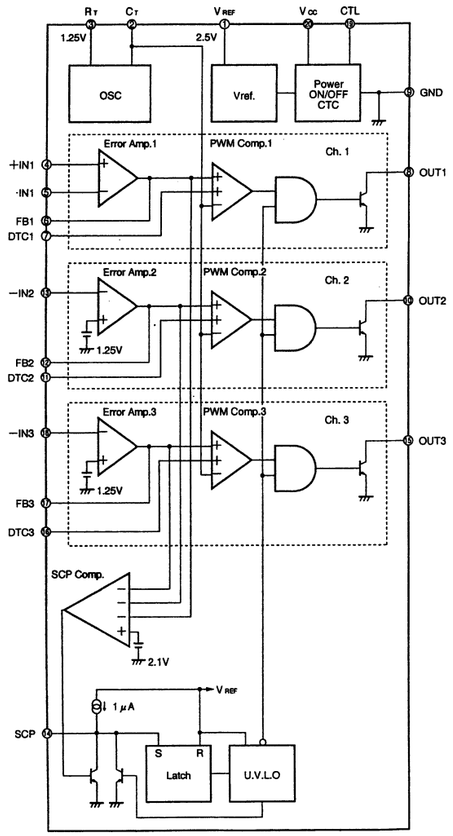

■ MC33269DR2-3.3 [MOTOROLA] (Regulator)

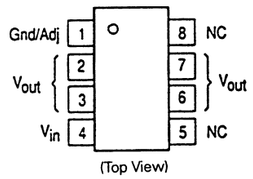

■ MB88341PFV-X [FUJITSU] (D/A Converter)

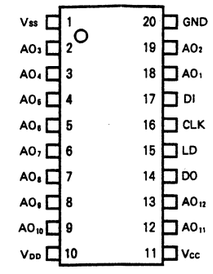

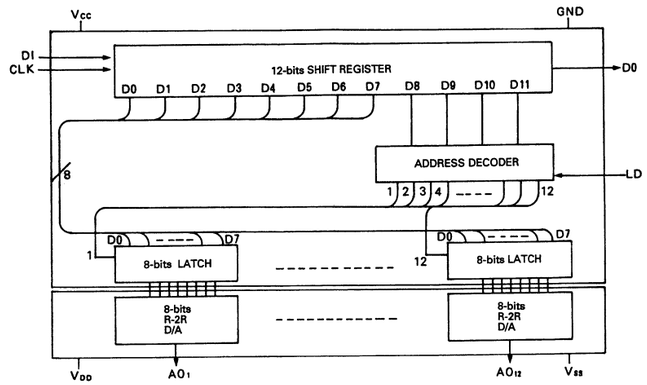

Symbol	Pin No. MB88341	I/O	Function
DI	17	I	For serial data (12 bits) input.
DO	14	O	For MSB data output of 12-bit shift register.
CLK	16	I	For shift clock input. Signal from DI pin is input to 12-bit shift register.
LD	15	I	With "H" input to LD pin, data of 12-bit shift register is loaded to decoder and D/A output register.
AO1 AO2 AO3 AO4 AO5 AO6 AO7 AO8 AO9 AO10 AO11 AO12	18 19 2 3 4 5 6 7 8 9 12 13	O	For 8-bits D/A output.
VCC	11	—	Power source of MCU interface.
GND	20	—	GND of MCU interface
VDD	10	—	Power source of D/A converter.
VSS	1	—	GND of D/A converter.

■ MB88345PF [FUJITSU] (D/A Converter)

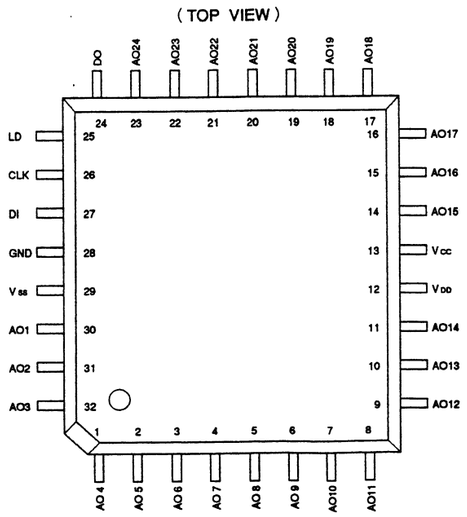

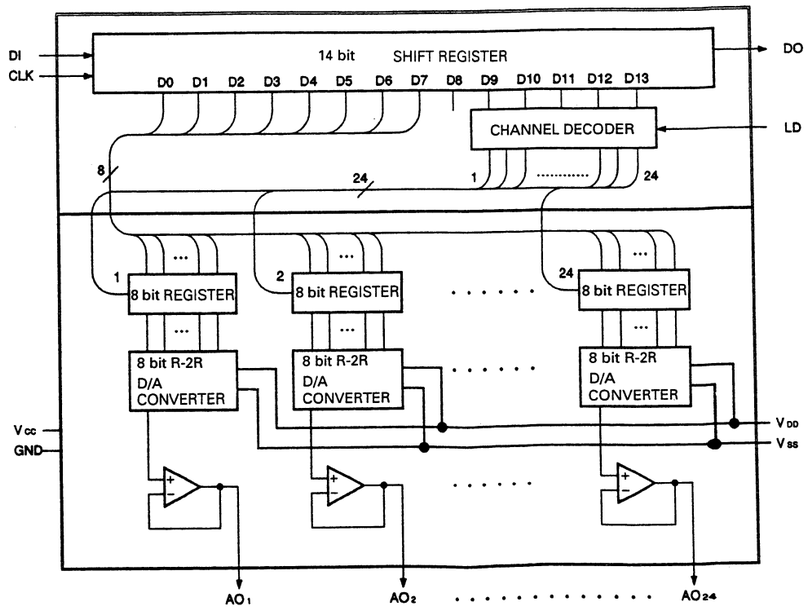

4-83

■ MB90T678BPF [MITSUBISHI] (CPU)

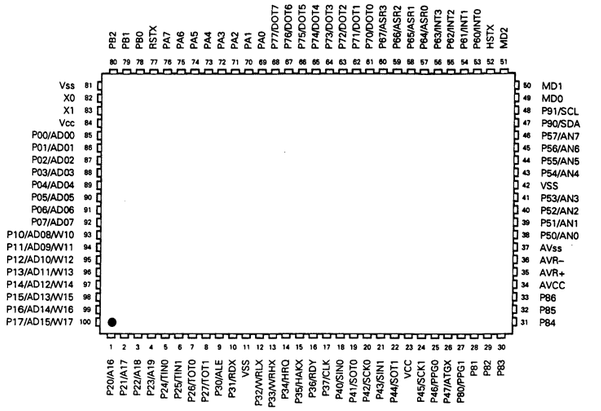

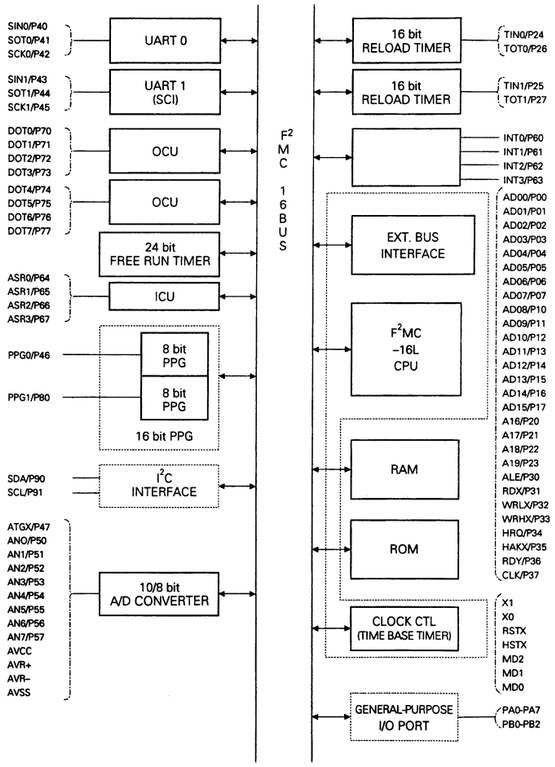

■ PLSC1234 [JVC] (2M Bit Flash Memory)

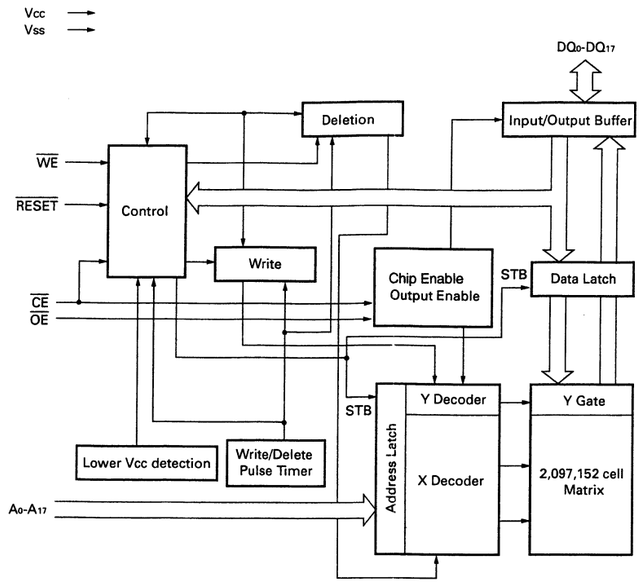

■ MN673711 [MATSUSHITA] (Video Compression/Decompression LSI)

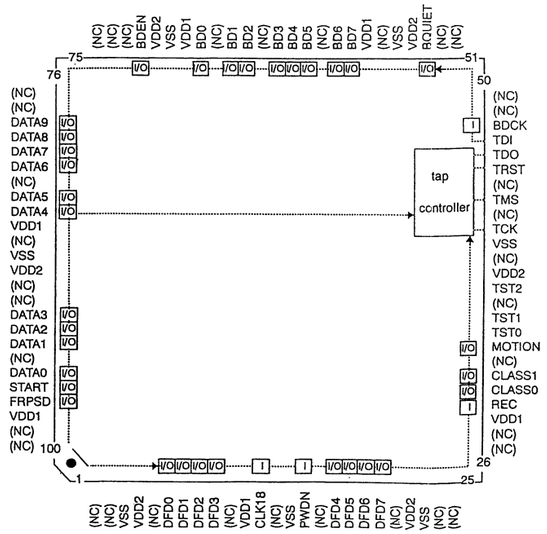

■ MC74HC367F-X [MOTOROLA] (Hex Bus Drivers With 3-State NON-Inverted Output)

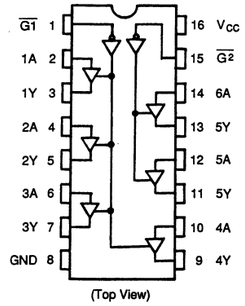

(Top View)

TRUE Table

INPUTS		OUTPUTS	
$\overline{G}$	An	Y(367A)	$\overline{Y}$(368A)
L	L	L	H
L	H	H	L
H	X	Z	Z

X:DON'T CARE Z:HIGH IMPEDANCE

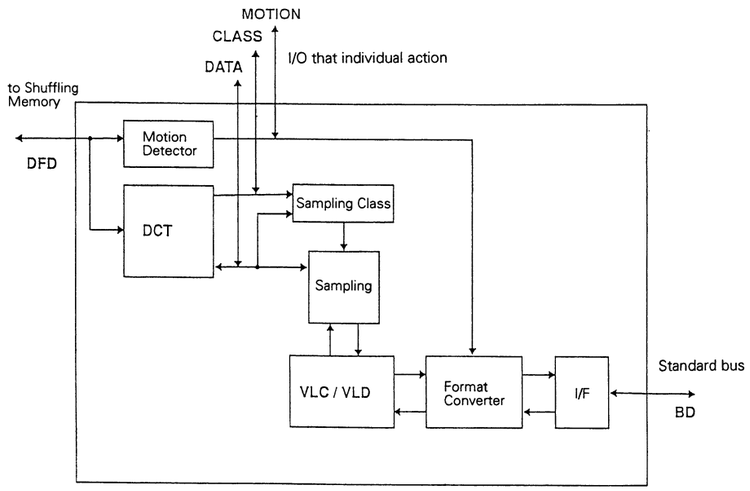

4-84

■ MC74HC4046AF-X [MOTOROLA]
(CMOS Phase Lock Loop)

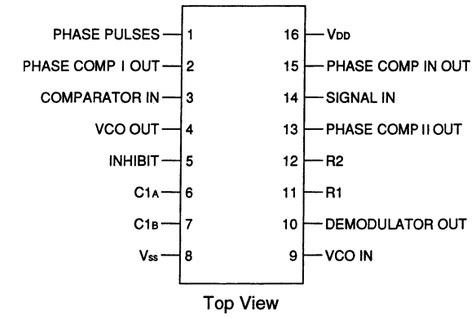

Top View

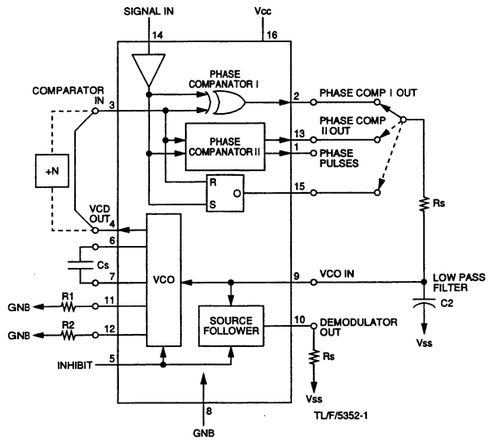

■ MN12821-QR-X [MATSUSHITA]
(Voltage Detecter)

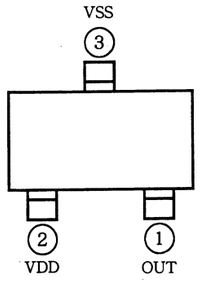

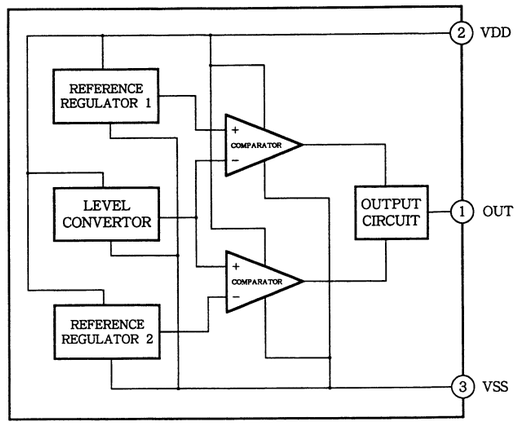

■ MN657021F [MATSUSHITA]
(8 Bit 3ch D/A Converter)

(Top View)

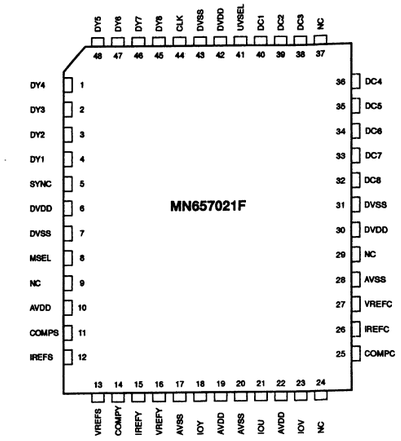

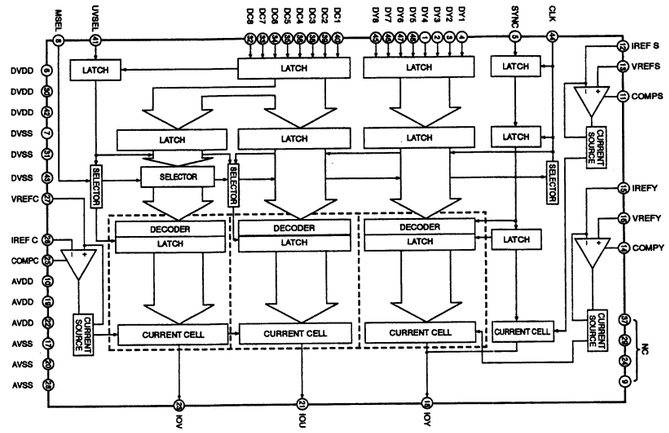

■ MSM6338MS-K-X [OKI]
(Digital Peak Detector for PCM Audio)

(TOP VIEW)

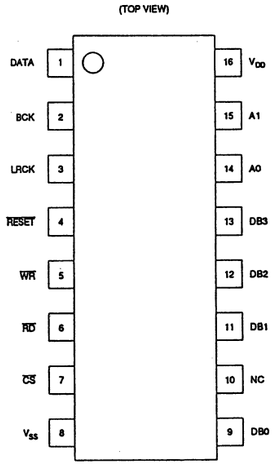

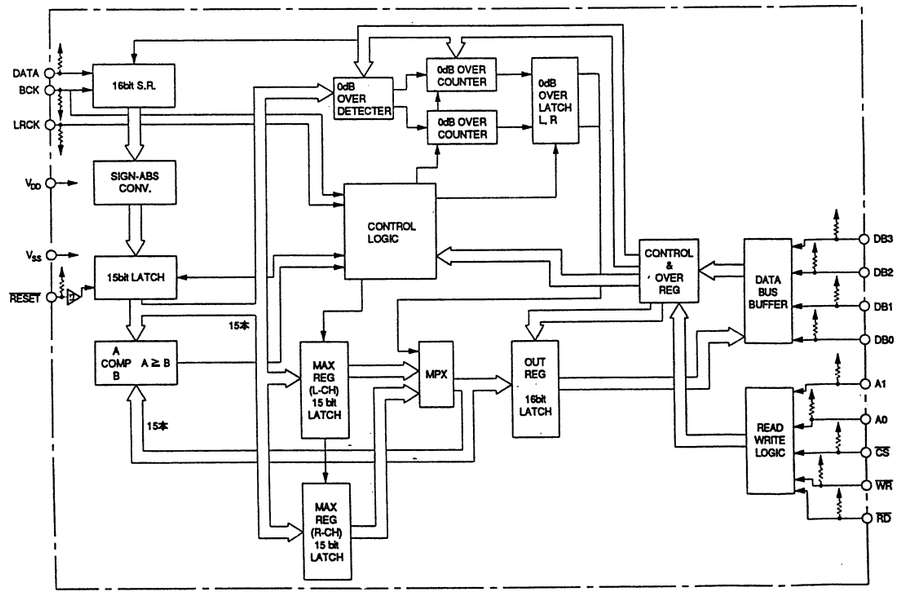

■ NJM062M-X [JRC]
(J-FET Input Op.Amp.)

(Top View)

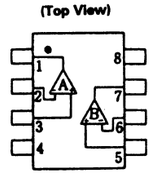

1. A OUTPUT
2. A−INPUT
3. A+INPUT
4. V⁻
5. B+INPUT
6. B−INPUT
7. B OUTPUT
8. V⁺

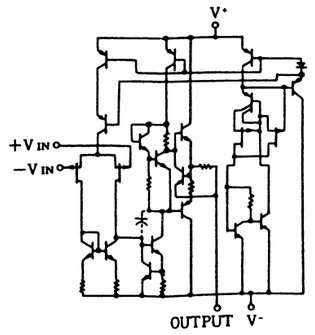

■ NJM1496V-X [JRC]
(Balanced Modulator)

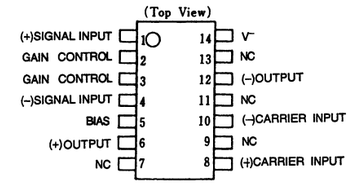

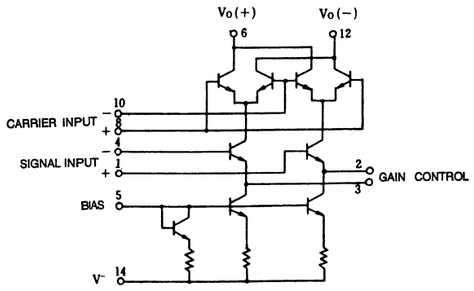

■ NJM2902M-X [JRC]
(Quad Single Supply Op.Amp.)

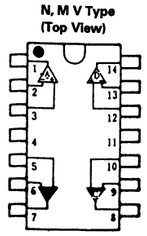

Pin Assignment

1.A OUTPUT	8.C OUTPUT
2.A–INPUT	9.C–INPUT
3.A+INPUT	10.C+INPUT
4.V+	11.GROUND
5.B+INPUT	12.D+INPUT
6.B–INPUT	13.D–INPUT
7.B OUTPUT	14.D OUTPUT

■ Equivalent Circuit (4 circuits in a chip)

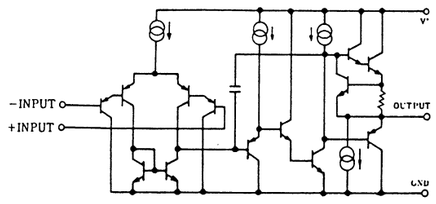

■ NJM319M-X [JRC]
(Voltage Comparator)

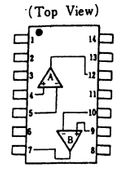

1. NC
2. NC
3. A GND
4. A+INPUT
5. A–INPUT
6. V⁻
7. B OUTPUT
8. B GND
9. B+INPUT
10. B–INPUT
11. V+
12. A OUTPUT
13. NC
14. NC

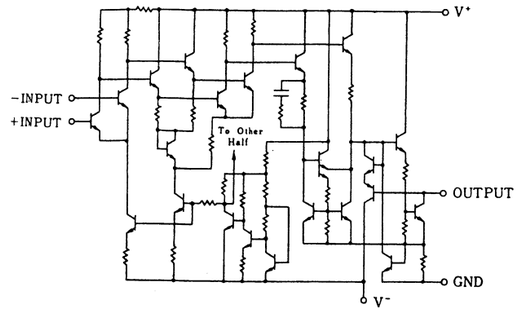

■ NJU6433FB2 [JRC]
(1/4 Duty LCD Driver)

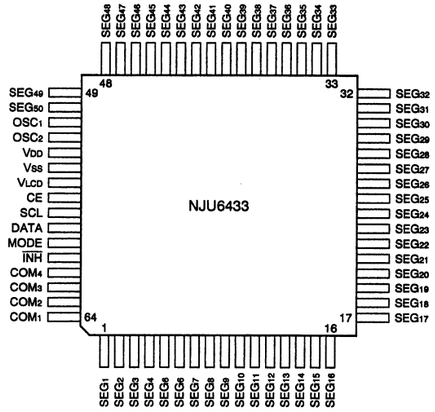

(TOP VIEW)

No.	Symbol	Function
1~50	SEG1~SEG50	Segment output for LCD driver
51	OSC1	OSC terminal
52	OSC2	
53	VDD	
54	VSS	GND
55	VLCD	Power source for LCD drive
56	CE	H level : Data input Drop-down edge : Data latch L level : Disable
57	SCL	Clock input for serial data trancefar.
58	DATA	Serial data input.
59	MODE	H level : Mode seting L level : Data input for LCD display
60	$\overline{INH}$	L level : LCD is not display H level : LCD is display
61~64	COM4~COM1	Common output for LCD drive.

■ NJM2068M-D-X [JRC]
(Dual Low-Noise Op.Amp.)

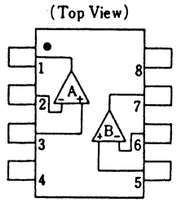

1. A OUTPUT
2. A–INPUT
3. A+INPUT
4. V⁻
5. B+INPUT
6. B–INPUT
7. B OUTPUT
8. V+

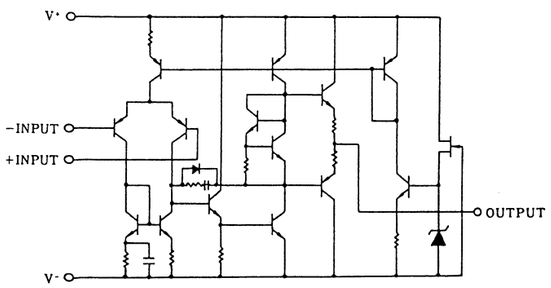

■ NJM2903V-X [JRC]
(Dual Single Supply Comparator)

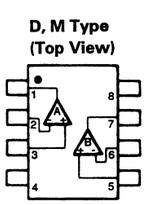

Pin Assignment

1. A OUTPUT
2. A–INPUT
3. A+INPUT
4. GND
5. B+INPUT
6. B–INPUT
7. B OUTPUT
8. V+

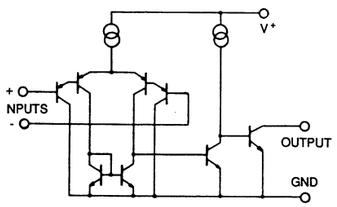

■ NJM4556AM-X [JRC]
(Dual High Current Op.Amp.)

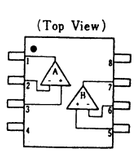

1. A OUTPUT
2. A–INPUT
3. A+INPUT
4. V⁻
5. B+INPUT
6. B–INPUT
7. B OUTPUT
8. V+

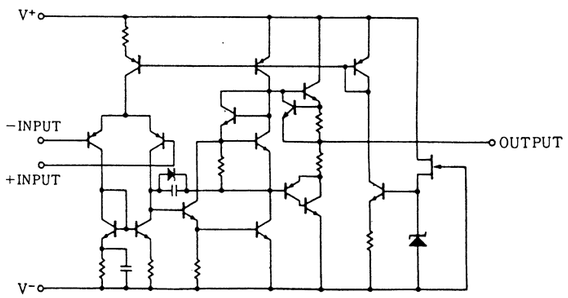

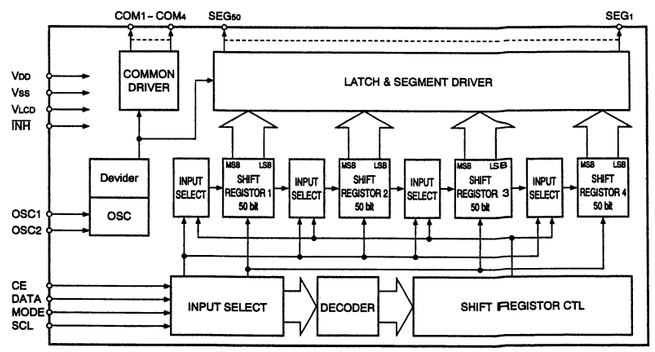

■ NJM2068V-X [JRC]
(See NJM2068M-D-X.)

4-86

■ NM24C02EM8-X [ROHM] (IIC Bus 2k Serial EEPROM)

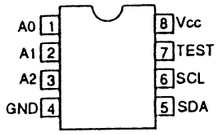

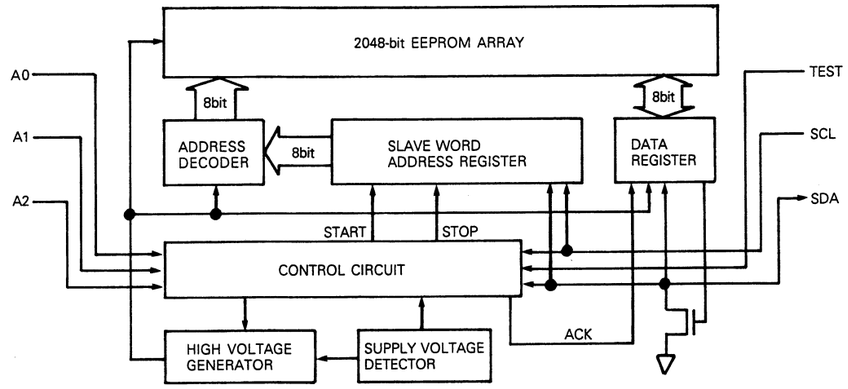

■ OPA655U-XE [BBJ] (Op.Amplifier)

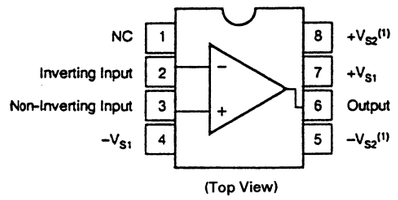

■ OPA658U-XE [BBJ] (Op.Amplifier)

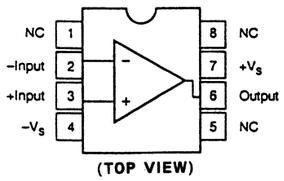

■ P16V8Z-25-01 [ADVANCED MICRO DEVICES] (Programmable Array Logic)

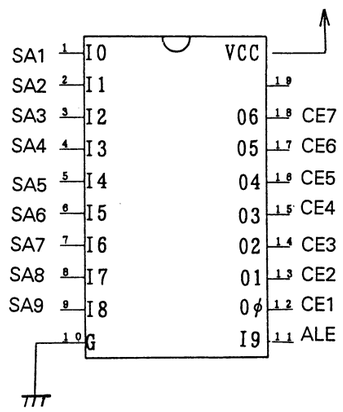

■ NM93C86AEM8-X [NATIONAL SEMICONDUCTOR] (16,384-Bit Serial Interface, Standard Voltage CMOS EEPROM)

Top View

Pin Name	
Pin	**Description**
CS	Chip Select
SK	Serial Data Clock
DI	Serial Data Input
DO	Serial Data Output
VSS	Ground
ORG	Memory Organization Select (On the NM93C86A)
NC	No Connect
VCC	Positive Power Supply

Block Diagram

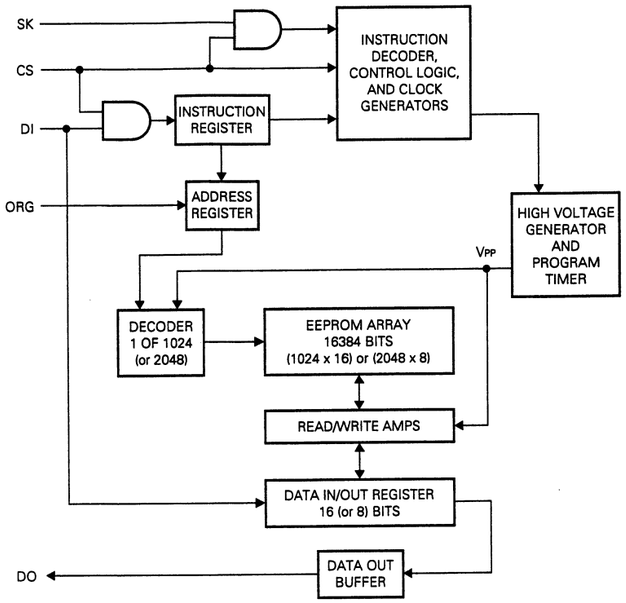

■ PCM1710U/G/-XE [BAR BRAWN] (D/A Converter)

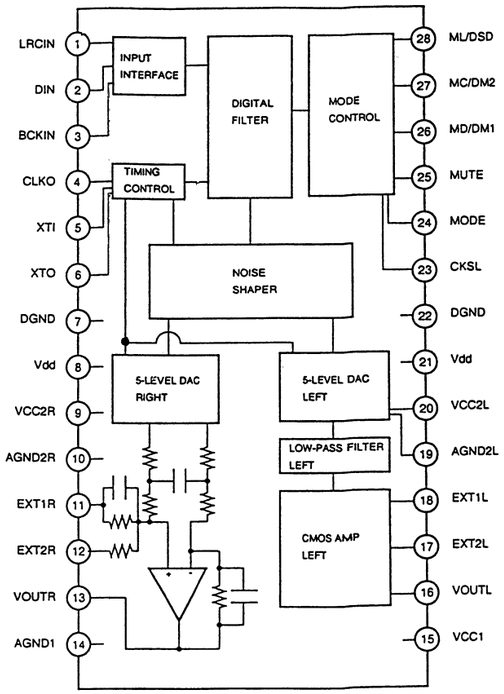

■ S-80840ANNP-W [SEIKO] (Precision Voltage Detector)

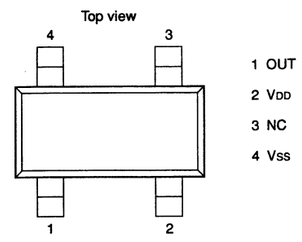

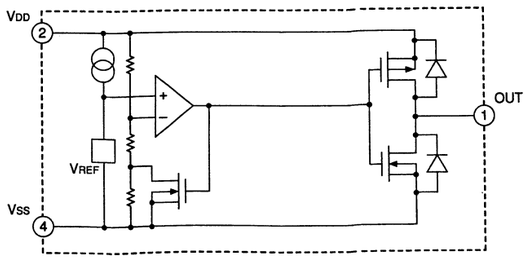

4-87

■ S-81224SGUP-X [SEIKO] (Voltage Regulator(2.4V))

Top view

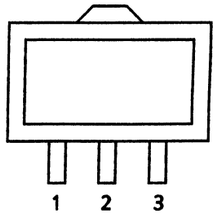

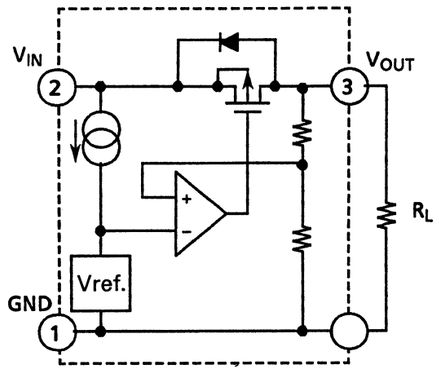

■ S-81233SGUP-X [SEIKO] (See S-81224SGUP-X.)

■ S-81240SGUP-X [SEIKO] (See S-81224SGUP-X.)

■ S-81250SGUP-X [SEIKO] (See S-81224SGUP-X.)

■ S-8423LFS-X [SEIKO] (Battery Back-up Selector)

8 pin SSOP
Top view

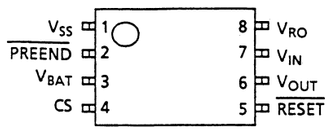

Pin name	Description
CS	Output terminal for CS voltage detector
$\overline{\text{RESET}}$	Output terminal for RESET voltage detector
$\overline{\text{PREEND}}$	Output terminal for PREEND voltage detector
VIN*	Input terminal for main power supply
VBAT*	Power input terminal for backup
VOUT*	Output terminal for voltage regulator 2
VRO*	Output terminal for voltage regulator 1
Vss	GND

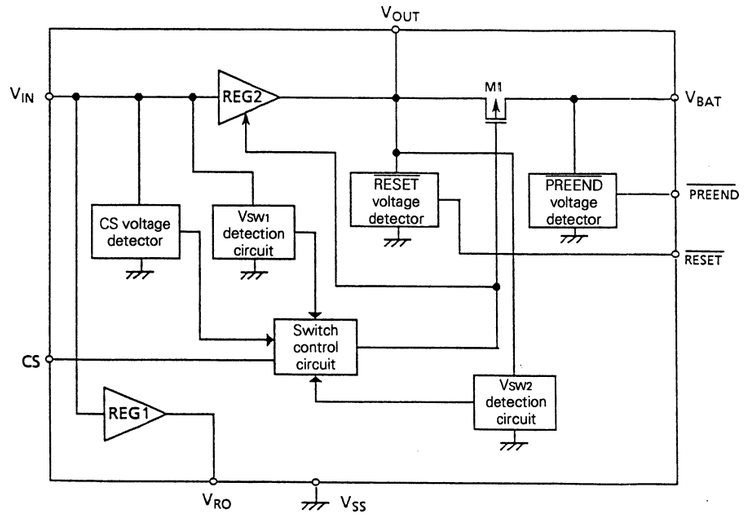

■ SN74CBT3253PW-X [TEXAS] (2 Circuit 4 Bit-1 Bit FET Multiplexer/Demultiplexer)

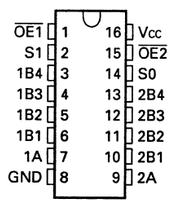

Top View

S1	S0	$\overline{\text{OE1}}$	$\overline{\text{OE2}}$	FUNCTION
X	X	X	H	Disconnect 1A
X	X	H	X	Disconnect 2A
L	L	L	L	1A to 1B1 and 2A to 2B1
L	H	L	L	1A to 1B2 and 2A to 2B2
H	L	L	L	1A to 1B3 and 2A to 2B3
H	H	L	L	1A to 1B4 and 2A to 2B4

H:High Level
L:Low Level
X:Dont Care

■ SC78148GF-XXX [JVC] (8-Bit Micro Computer)

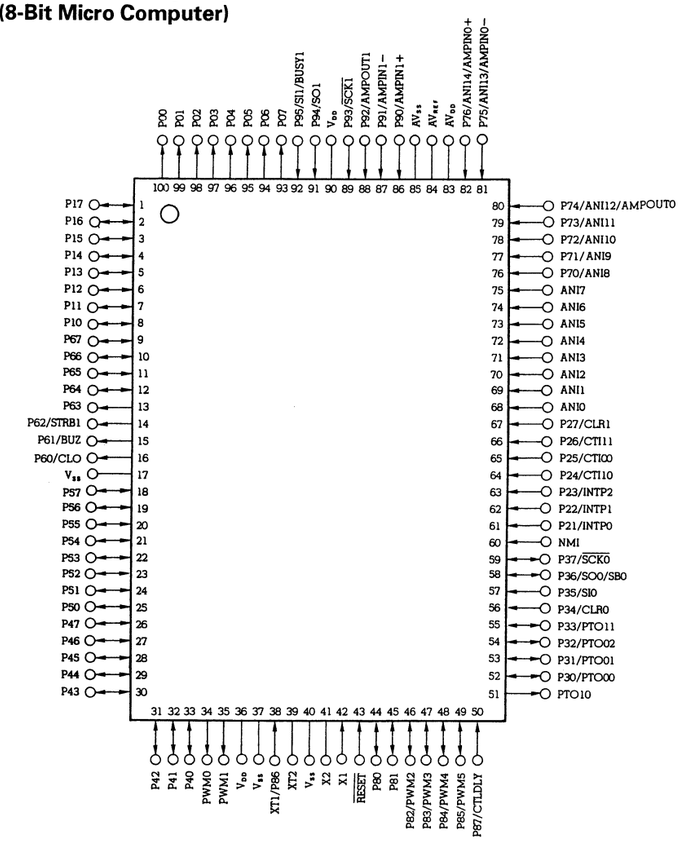

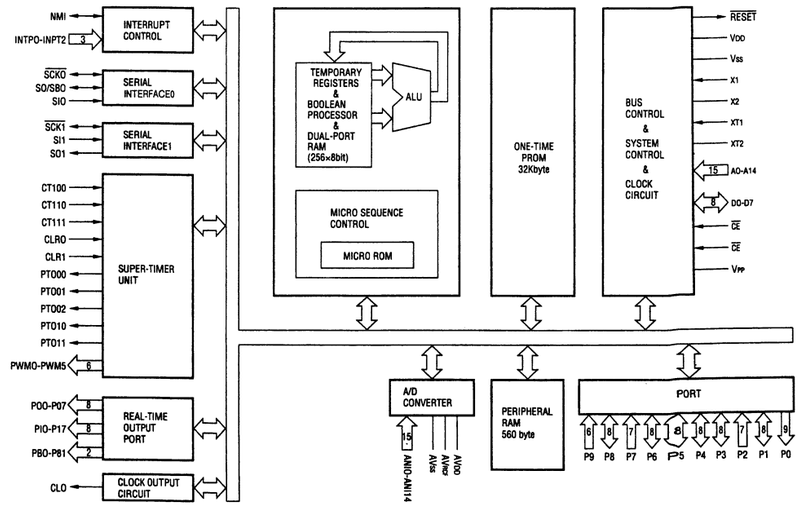

4-88

■ SN74CBT3345PW-X [TEXAS]
(8 Bit Cross Bar Switch)

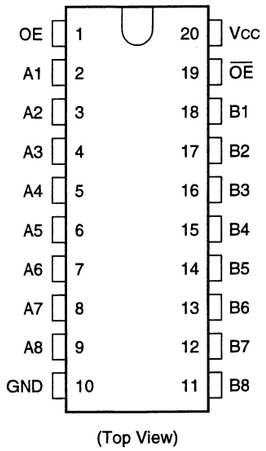

(Top View)

Inputs		Inputs/Outputs
OE	$\overline{OE}$	A, B
X	L	A=B
H	X	A=B
L	H	Z

H : High Level
L : Low Level
X : Don't Care
Z : High Impedance

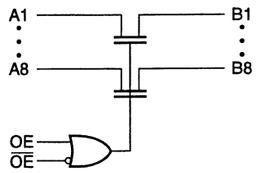

■ SN74LV08APW-X [TEXAS]
(Quad 2-Input AND Gates)

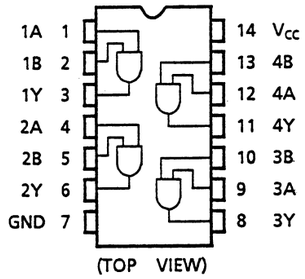

(TOP VIEW)

TRUE Table

A	B	Y
L	L	L
L	H	L
H	L	L
H	H	H

■ SN74LV125APW-X [TEXAS]
(Quad Bus Buffer Gates With 3-State Outputs)

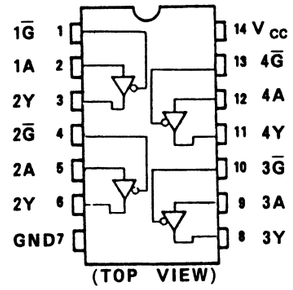

(TOP VIEW)

TC74HC125A TRUE Table

INPUTS		OUTPUTS
G	A	Y
H	X	Z
L	L	L
L	H	H

X : Don't Care
Z : High Impedance

■ TC4053BFT-X [TOSHIBA]
(Triple 2 Channel Analog Multiplexers/ Demultiplexers)

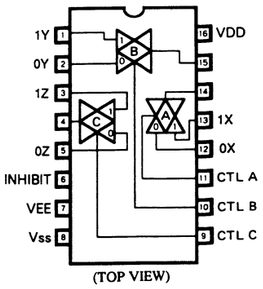

(TOP VIEW)

TRUTH TABLE

CONTROL INPUTS				"ON" CHANNEL
INHIBIT	C	B	A	4053BP 4053BF
L	L	L	L	0X, 0Y, 0Z
L	L	L	H	1X, 0Y,0Z
L	L	H	L	0X, 1Y, 0Z
L	L	H	H	1X, 1Y, 0Z
L	H	L	L	0X, 0Y, 1Z
L	H	L	H	1X, 0Y, 1Z
L	H	H	L	0X, 1Y, 1Z
L	H	H	H	1X, 1Y, 1Z
H	*	*	*	NOTE

* Don't Care,

■ SN74LV138APW-X [TEXAS]
(3-Line to 8-Line Decoders/Demultiplexers)

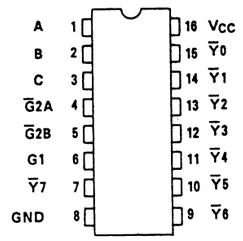

(TOP VIEW)

TRUE Table

INPUTS						OUTPUTS								SELECTED OUTPUT
ENABLE			SELECT											
G1	G2A	G2B	C	B	A	Y0	Y1	Y2	Y3	Y4	Y5	Y6	Y7	
L	X	X	X	X	X	H	H	H	H	H	H	H	H	NONE
X	H	X	X	X	X	H	H	H	H	H	H	H	H	NONE
X	X	H	X	X	X	H	H	H	H	H	H	H	H	NONE
H	L	L	L	L	L	L	H	H	H	H	H	H	H	Y0
H	L	L	L	L	H	H	L	H	H	H	H	H	H	Y1
H	L	L	L	H	L	H	H	L	H	H	H	H	H	Y2
H	L	L	L	H	H	H	H	H	L	H	H	H	H	Y3
H	L	L	H	L	L	H	H	H	H	L	H	H	H	Y4
H	L	L	H	L	H	H	H	H	H	H	L	H	H	Y5
H	L	L	H	H	L	H	H	H	H	H	H	L	H	Y6
H	L	L	H	H	H	H	H	H	H	H	H	H	L	Y7

X : DONT' CARE

■ SN74LV244APW-X [TEXAS]
(Octal Buffers AND Line Drivers With NON-Inverted 3-State Outputs)

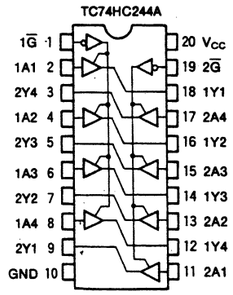

(TOP VIEW)

TRUE Table

INPUTS		OUTPUTS
$\overline{G}$	A_n	$\overline{Y}_n$
L	L	L
L	H	H
H	X	Z

X : Don't Care
Z : High Impedance

■ TA75S01F-X [TOSHIBA]
(Single Op.Amp.)

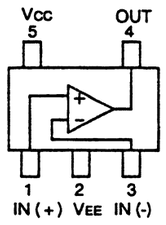

■ TA75S393F-W [TOSHIBA]
(Single Conparator)

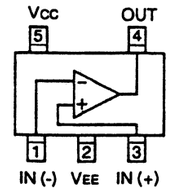

■ TA75W01FU-X [TOSHIBA]
(Dual Op.Amplifier)

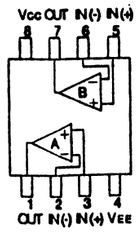

■ TA75W393FU-X [TOSHIBA]
(Dual Conparater)

(Top View)

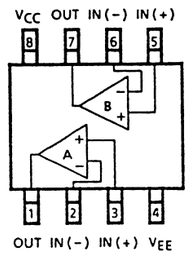

■ TC4S11F-X [TOSHIBA]
(2 Input Single NAND Gate)

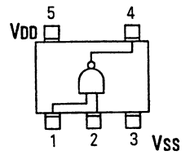

■ TC4S30F-W [TOSHIBA]
(Single Exclusive OR Gate)

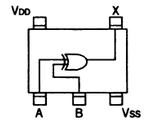

MARK : C8

TRUE TABLE

INPUT		OUTPUT
A	B	X
L	L	L
L	H	H
H	L	H
H	H	L

4-89

■ TC4S66F-X [TOSHIBA] (Bilateral Switch)

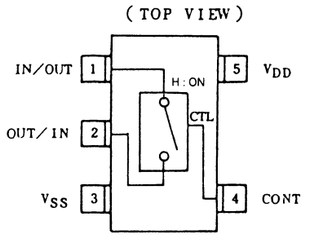

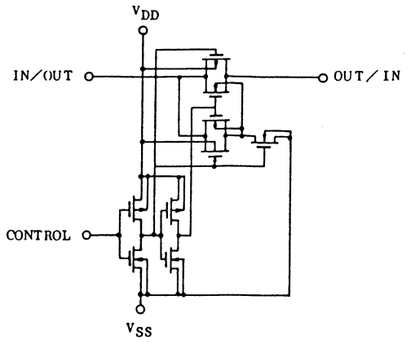

CONTROL	IMPEDANCE BETWEEN IN/OUT - OUT/IN ※
H	$0.5 \sim 5 \times 10^2\ \Omega$
L	$> 10^9\ \Omega$

※ See Electrical Characteristics

■ TC4S69F-X [TOSHIBA] (Inverter Gate)

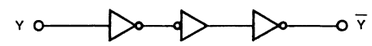

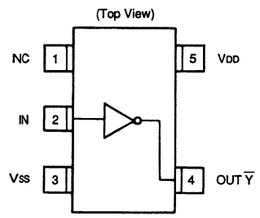

■ TC4S81F-X [TOSHIBA] (2-Input AND Gate)

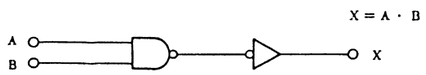

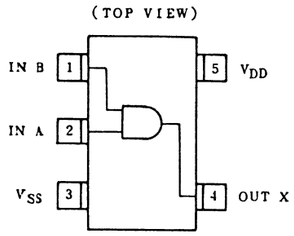

■ TC4W66FU-X [TOSHIBA] (Analog Switch)

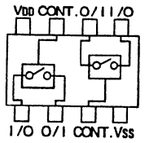

■ TC74HC04AF-X [TOSHIBA] (Hex Inverters)

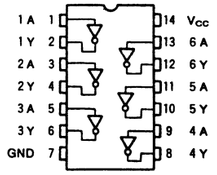

(TOP VIEW)

■ TC4W53F-X [TOSHIBA] (2-Channel Multiplexer)

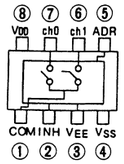

TRUE TABLE

CONTROL INPUT		ON CHANNEL
INH	ADR	
L	L	ch0
L	H	ch1
H	*	NONE

*Don't care

■ TC4W53FU-X [TOSHIBA] (See TC4W53F-X.)

■ TC74HC165AF-X [TOSHIBA] (8-Bit Serial or Parallel-In/Serial Out Shift Registers With Complementary Out)

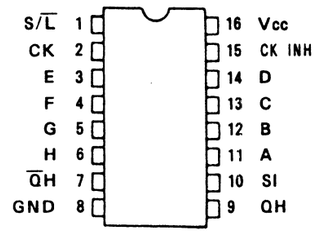

(TOP VIEW)

Timing chart

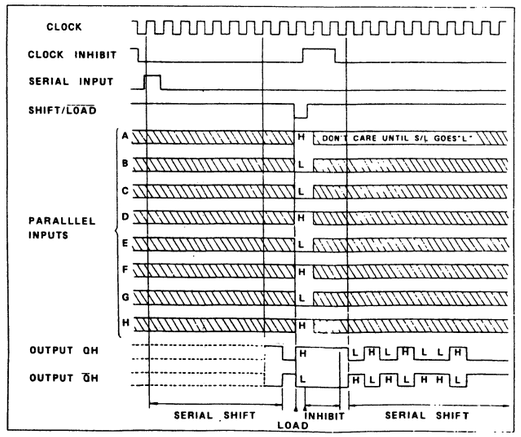

■ TC74HC4538AFS-X [TOSHIBA] (Dual Retriggerable Monostable Multivibrator)

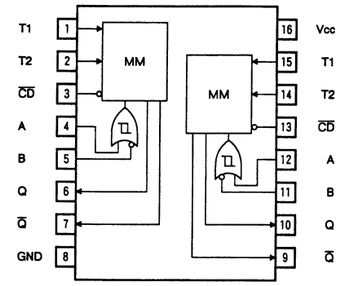

TOP VIEW

TRUE Table

INPUT			OUTPUT		NOTE
A	B	CD	Q	Q	
↑	H	H	⎍	⎍	OUTPUT ENABLE
X	L	H	L	H	INHIBIT
H	X	H	L	H	INHIBIT
L	↓	H	⎍	⎍	OUTPUT ENABLE
X	X	L	L	H	INHIBIT

X:Don't Care

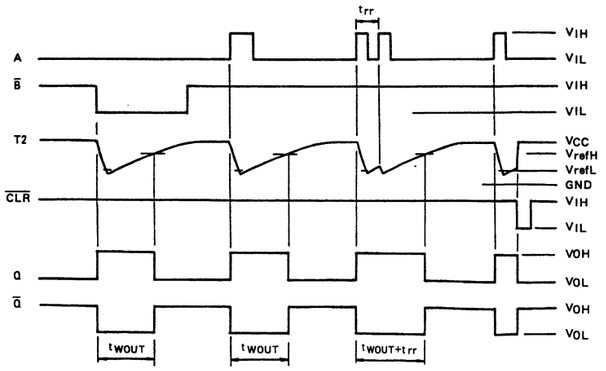

■ TC74VHC08FT-X [TOSHIBA] (See SN74LV08APW-X.)

■ TC74VHC157FT-X [TOSHIBA] (Quad 2-Line to 1-Line Data Selectors/ Multiplexers,NON-Inverted Data Outputs)

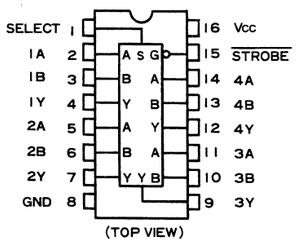

(TOP VIEW)

TRUE Table

INPUTS				OUTPUT
STROBE	SELECT	A	B	Y
H	X	X	X	L
L	L	L	X	L
L	L	H	X	H
L	H	X	L	L
L	H	X	H	H

X:DON'T CARE

4-90

■ TC74VHC123AFT-X [TOSHIBA]
(Dual Retriggerable Monostable Multivibrators)

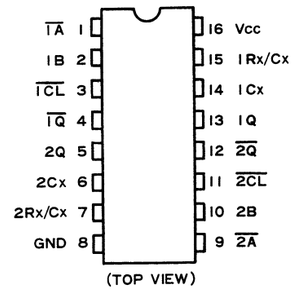

(TOP VIEW)

TRUE Table

INPUTS			OUTPUTS		NOTE
$\overline{A}$	B	$\overline{OL}$	Q	$\overline{Q}$	
↓	H	H	⎍	⎍	OUTPUT ENABLE
X	L	H	L	H	INHIBIT
H	X	H	L	H	INHIBIT
L	↑	H	⎍	⎍	OUTPUT ENABLE
L	H	↑	⎍	⎍	OUTPUT ENABLE
X	X	L	L	H	INHIBIT

■ TC74VHC153FT-X [TOSHIBA]
(Dual 4-Channel Multiplexer)

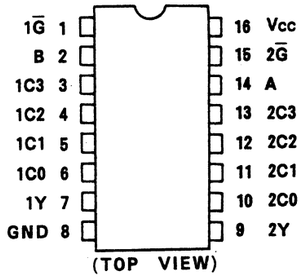

(TOP VIEW)

TRUTH TABLE

SELECT INPUTS		DATA INPUTS				STROBE	OUTPUT Y	
B	A	C0	C1	C2	C3	G	HC153A	HC253A
X	X	X	X	X	X	H	L	Z
L	L	L	X	X	X	L	L	L
L	L	H	X	X	X	L	H	H
L	H	X	L	X	X	L	L	L
L	H	X	H	X	X	L	H	H
H	L	X	X	L	X	L	L	L
H	L	X	X	H	X	L	H	H
H	H	X	X	X	L	L	L	L
H	H	X	X	X	H	L	H	H

X : Don't care
Z : Hi impedance

■ TC74VHC174FT-X [TOSHIBA]
(HEX D-Type Flip Flop With Common Clock and direct Clear)

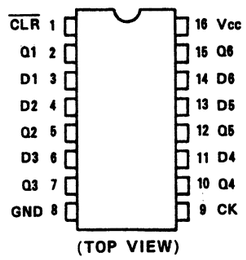

(TOP VIEW)

TRUE Table

INPUTS			OUTPUT	FUNCTION
$\overline{CLR}$	D	CK	Q	
L	X	X	L	CLEAR
H	L	↑	L	–
H	H	↑	H	–
H	X	↓	Qn	NO CHANGE

X : Don't care

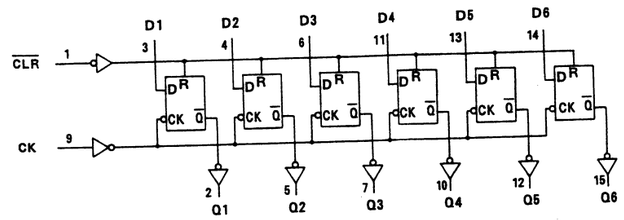

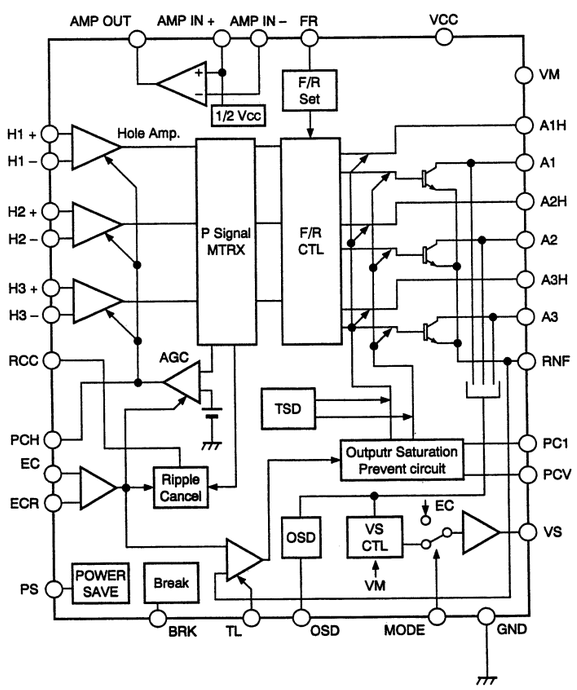

■ TC74VHC373FT-X [TOSHIBA]
(Octal D-Type Latch With NON-Inverted 3-State Output)

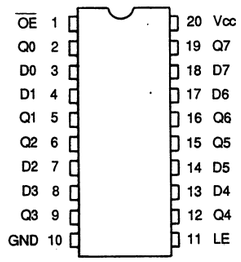

(Top View)

TRUE Table

INPUTS			OUTPUTS
$\overline{OE}$	LE	D	
H	X	X	Z
L	L	X	Q_n
L	H	L	L
L	H	H	H

X : Don't Care
Z : Hi impedance
Qn : Q output level before the LE become "L".

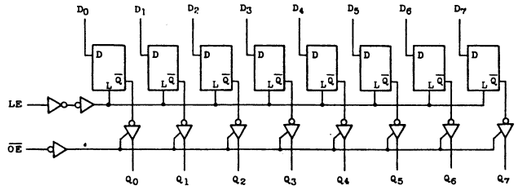

■ TC74VHC4040FT-X [TOSHIBA]
(Synchronous 12-Bit Binary Ripple Counters)

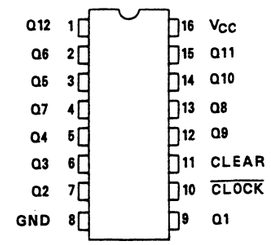

(TOP VIEW)

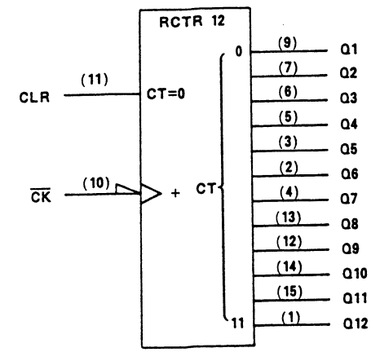

TRUTH TABLE

CLOCK	CLEAR	OUTPUT STATE
X	H	ALL OUTPUTS = "L"
↓	L	NO CHANGE
↑	L	ADVANCE TO NEXT STATE

X ; Don't care

Timing chart

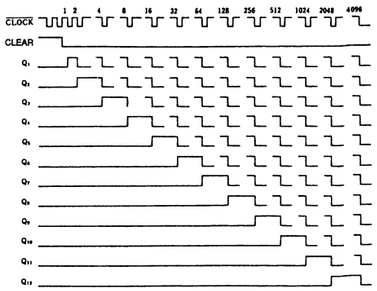

■ TC7S04F-X [TOSHIBA]
(Invertor)

Pin arangement

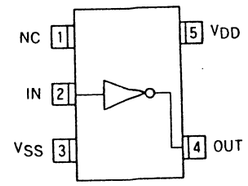

4-91

■ TC74VHC541FT-X [TOSHIBA] (Octal Bus Buffer With Inverted 3-State Outputs)

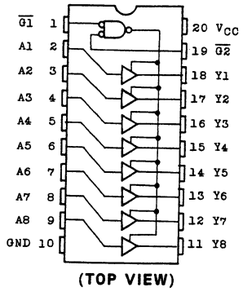

(TOP VIEW)

TRUE Table

INPUT			OUTPUT
$\overline{G}1$	$\overline{G}2$	A	Y
L	L	H	H
L	L	L	L
H	X	X	Z
X	H	X	Z

■ TC74VHC573FT-X [TOSHIBA] (Octal D-Type Latch With NON-Inverted 3-State Outputs)

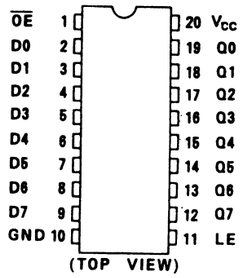

(TOP VIEW)

TRUE Table

INPUTS			OUTPUTS
$\overline{OE}$	LE	D	Q
H	X	X	HZ
L	L	X	Q_n
L	H	L	L
L	H	H	H

X : Don't care.
Z : Hi impedance
Q_n : Level of Q output before LE becomes "L".

■ TC74VHCT541AFTX [TOSHIBA] (See TC74VHC541FT-X.)

■ TC7S08F-X [TOSHIBA] (2 Input Single AND Gate)

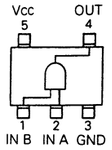

TRUE Table

A	B	X
L	L	L
L	H	L
H	L	L
H	H	H

■ TC7S08FU-X [TOSHIBA] (See TC7S08F-X.)

■ TC7S14FU-X [TOSHIBA] (Schmitt trigger)

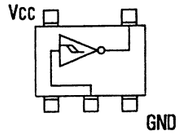

■ TC7S66FU-X [TOSHIBA] (Analog SW)

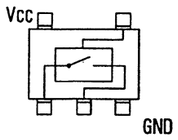

■ TC7SH04FU-X [TOSHIBA] (See TC7S04F-X.)

■ TC7SH08FU-X [TOSHIBA] (See TC7S08F-X.)

■ TC7SH86FU-X [TOSHIBA] (Single Exclusive OR Gate)

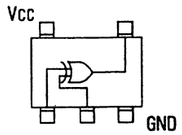

■ TC7SU04FU-X [TOSHIBA] (See TC7S04F-X.)

■ TC7SH32FU-X [TOSHIBA] (2 Input Single OR Gate)

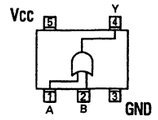

TRUE Table

A	B	Y
H	H	H
L	H	H
H	L	H
L	L	L

■ TC7W00FU-X [TOSHIBA] (2 Input Dual NAND Gate)

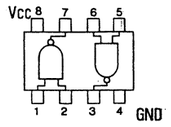

TRUE Table

A	B	X
L	L	H
L	H	H
H	L	H
H	H	L

■ TC7W04FU-X [TOSHIBA] (Triple Inverter Gate)

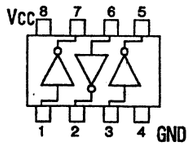

■ TC7W08FU-X [TOSHIBA] (2 Input Dual AND Gate)

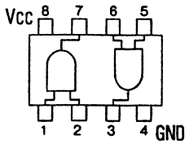

■ TC7W126FU-X [TOSHIBA] (Dual Bus Buffer)

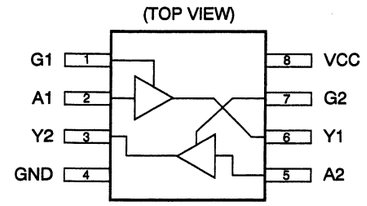

Truth Table

INPUTS		OUTPUTS
G	A	Y
L	X	Z
H	L	L
H	H	H

X : Don't Cate
Z : High Impedance

■ TC7W74FU-X [TOSHIBA] (D-type Flip-Flop)

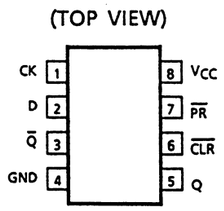

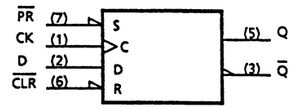

TRUE Table

INPUTS				OUTPUTS		FUNCTION
$\overline{CLR}$	$\overline{PR}$	D	CK	Q	$\overline{Q}$	
L	H	×	×	L	H	CLEAR
H	L	×	×	H	L	PRESET
L	L	×	×	H	H	—
H	H	L	↑	L	H	—
H	H	H	↑	H	L	—
H	H	×	↓	Q_n	$\overline{Q}_n$	NO CHANGE

× : Don't care

■ TLC2932IPW [TEXAS] (PLL)

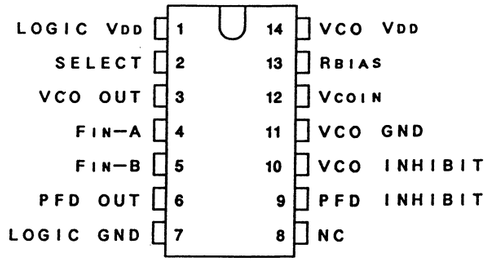

■ UPC29M05T-X [NEC] (Voltage Regulator)

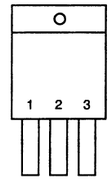

1: INPUT
2: GND
3: OUTPUT

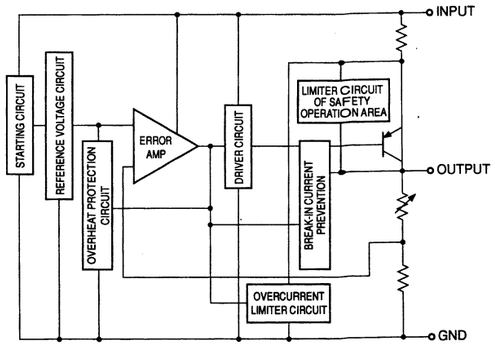

4-92

■ TDA8766G/C1 [PHILIPS] (10 Bit High-Speed 2.7 to 5.25V Analog-to-Digital Converter)

(Top View)

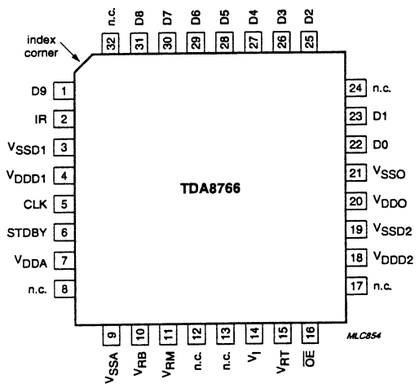

SYMBOL	PIN	DESCRIPTION
D9	1	data output; bit 9 (MSB)
IR	2	in range data output
V_{SSD1}	3	digital ground 1
V_{DDD1}	4	digital supply voltage 1 (2.7 to 5.25 V)
CLK	5	clock input
STDBY	6	standby mode input
V_{DDA}	7	analog supply voltage (2.7 to 5.25 V)
n.c.	8	not connected
V_{SSA}	9	analog ground
V_{RB}	10	reference voltage BOTTOM input
V_{RM}	11	reference voltage MIDDLE
n.c.	12	not connected
n.c.	13	not connected
V_I	14	analog input voltage
V_{RT}	15	reference voltage TOP input
$\overline{OE}$	16	output enable input
n.c.	17	not connected

SYMBOL	PIN	DESCRIPTION
V_{DDD2}	18	digital supply voltage 2 (2.7 to 5.25 V)
V_{SSD2}	19	digital ground 2
V_{DDO}	20	positive supply voltage for output stage (2.5 to 5.25 V)
V_{SSO}	21	digital output ground
D0	22	data output; bit 0 (LSB)
D1	23	data output; bit 1
n.c.	24	not connected
D2	25	data output; bit 2
D3	26	data output; bit 3
D4	27	data output; bit 4
D5	28	data output; bit 5
D6	29	data output; bit 6
D7	30	data output; bit 7
D8	31	data output; bit 8
n.c.	32	not connected

■ UPC2384GA [NEC] (Digital VTR PLL)

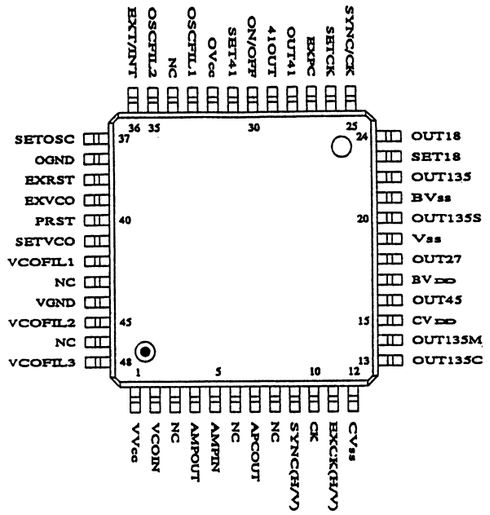

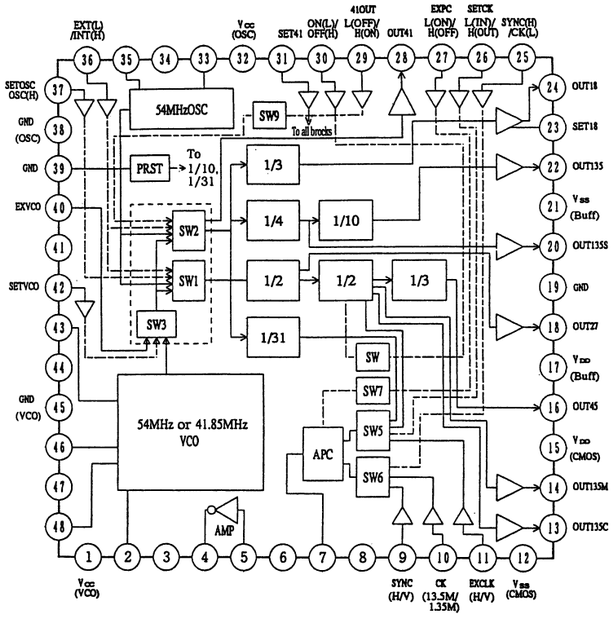

■ UPC4082G2-X [NEC] (J-FET Input Dual Op-Amplifire)

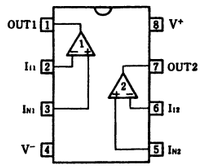

(TOP VIEW)

■ UPC812G2-X [NEC] (Op.Amp.)

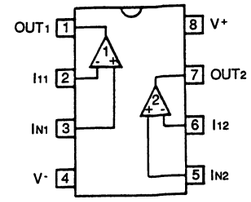

■ UPC78L05T-X [NEC] (Regulator)

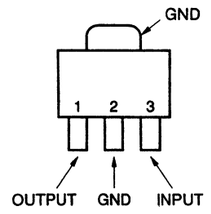

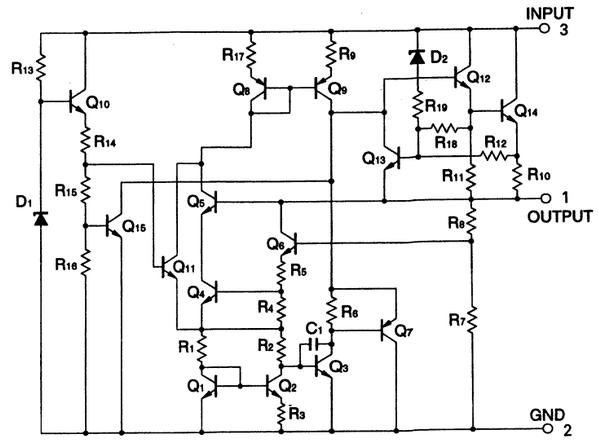

■ UPD42S4260ALG5 [NEC] (3.3V 4M Bit Dynamic RAM)

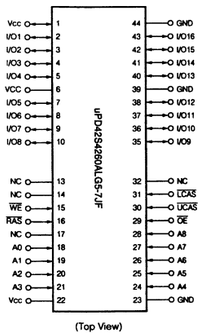

(Top View)

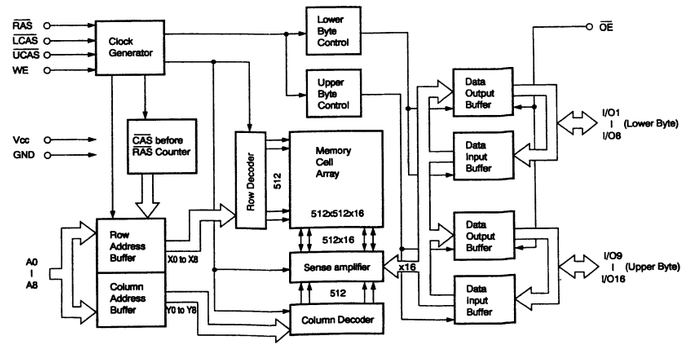

4-93

■ UPD16510GR-X [NEC]
(Level Shifter)

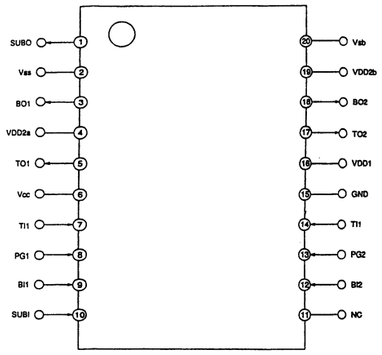

TOP VIEW

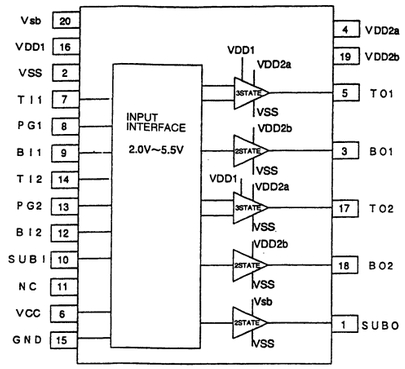

INPUT				OUTPUT		
TI1,2	PG	BI1,2	SUBI	TO1,2	BO1,2	SUBO
L	H	–	–	Vka	–	–
H	H	–	–	VL	–	–
L	L	–	–	VH	–	–
H	L	–	–	VL	–	–
–	–	L	–	–	Vkb	–
–	–	H	–	–	VL	–
–	–	–	L			VL
–	–	–	H			VHH

(VL=VSS、Vka=VDD2a、Vkb=VDD2b、VH=VDD1、VHH=Vsb)

INPUT PULSE TIMING CHART

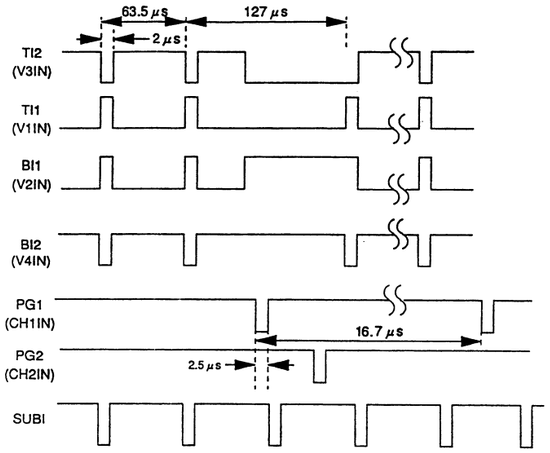

OVERLAP EXPANSION CHART

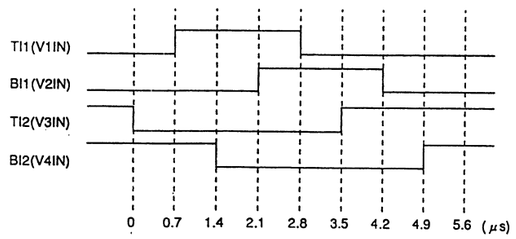

INPUT WAVE FORM

■ UPD489001 [NEC]
(5M Bit Field Buffer)

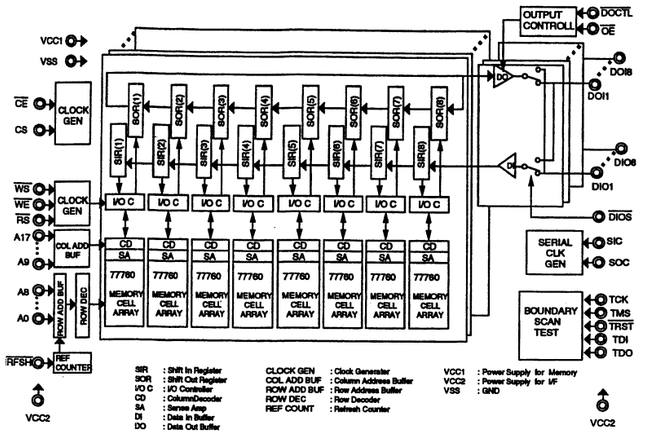

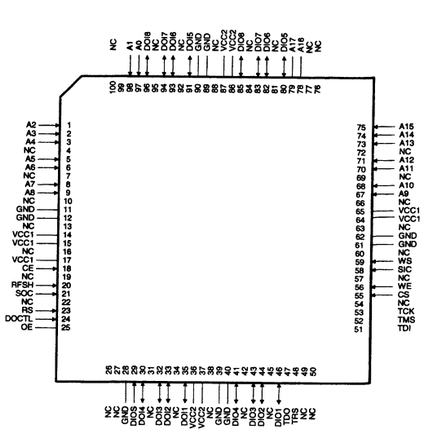

Pin No.	Label	In/Out	Description
1	A2	In	Shuffle memory address (18 MHz, 18 bit)
2	A3	In	
3	A4	In	
4	NC	–	Not used
5	A5	In	Shuffle memory address (18 MHz, 18 bit)
6	A6	In	
7	NC	–	Not used
8	A7	In	Shuffle memory address (18 MHz, 18 bit)
9	A8	In	
10	NC	–	Not used
11	GND	–	Ground
12	GND	–	
13	NC	–	Not used
14	VCC1	–	Power supply (+3 V)
15	VCC1	–	
16	NC	–	Not used
17	VCC1	–	–
18	CE	In	Shuffle memory chip enable
19	NC	–	Not used
20	RFSH	–	–
21	SOC	In	Clock input (18 MHz) from CLK OSC IC
22	NC	–	Not used
23	RS	In	Shuffle memory read strobe
24	DOCTL	In	Shuffle memory data output control
25	OE	–	Low fixed
26	NC	–	Not used
27	NC	–	Not used
28	GND	–	Ground
29	DIOS	In	Shuffle memory data I/O select
30	DIO4	In/Out	Shuffle memory data (8 bit)
31	NC	–	Not used
32	DIO3	In/Out	Shuffle memory data (8 bit)
33	DIO2	In/Out	
34	NC	–	Not used
35	DIO1	In/Out	Shuffle memory data (8 bit)
36	VCC2	–	Power supply (+3 V)
37	VCC2	–	
38	NC	–	Not used
39	GND	–	Ground
40	GND	–	
41	DIO4	In/Out	Shuffle memory data (8 bit)
42	NC	–	Not used
43	DIO3	In/Out	Shuffle memory data (8 bit)
44	DIO2	In/Out	
45	NC	–	Not used
46	DIO1	In/Out	Shuffle memory data (8 bit)
47	TDO	–	–
48	TRS	–	–
49	NC	–	Not used
50	NC	–	Not used

Pin No.	Label	In/Out	Description
51	TDI	–	–
52	TMS	–	–
53	TCK	–	–
54	NC	–	Not used
55	CS	–	High fixed
56	WE	In	Write enable from SHUFFLE IC
57	NC	–	Not used
58	SIC	In	Clock input (18 MHz)
59	WS	In	Shuffle memory control write strobe
60	NC	–	Not used
61	GND	–	Ground
62	GND	–	
63	NC	–	Not used
64	VCC1	–	Power supply (+3 V)
65	VCC1	–	
66	NC	–	Not used
67	A9	In	Shuffle memory address (18 MHz, 18 bit)
68	A10	In	
69	NC	–	Not used
70	A11	In	Shuffle memory address (18 MHz, 18 bit)
71	A12	In	
72	NC	–	Not used
73	A13	In	Shuffle memory address (18 MHz, 18 bit)
74	A14	In	
75	A15	In	
76	NC	–	Not used
77	NC	–	Not used
78	A16	In	Shuffle memory address (18 MHz, 18 bit)
79	A17	In	
80	DIO5	In/Out	Shuffle memory data (8 bit)
81	NC	–	Not used
82	DIO6	In/Out	Shuffle memory data (8 bit)
83	DIO7	In/Out	
84	NC	–	Not used
85	DIO8	In/Out	Shuffle memory data (8 bit)
86	VCC2	–	Power supply (+3 V)
87	VCC2	–	
88	NC	–	Not used
89	GND	–	Ground
90	GND	–	
91	DOI5	In/Out	Shuffle memory data (8 bit)
92	NC	–	Not used
93	DOI6	In/Out	Shuffle memory data (8 bit)
94	DOI7	In/Out	
95	NC	–	Not used
96	DOI8	In/Out	Shuffle memory data (8 bit)
97	A0	In	Shuffle memory address (18 MHz, 18 bit)
98	A1	In	–
99	NC	–	Not used
100	NC	–	Not used

4-94

■ UPD6453GT-101 [NEC]
(On Screen Charactor Generator)

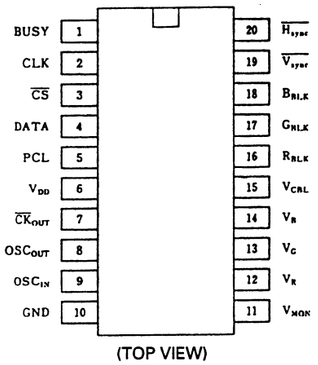

(TOP VIEW)

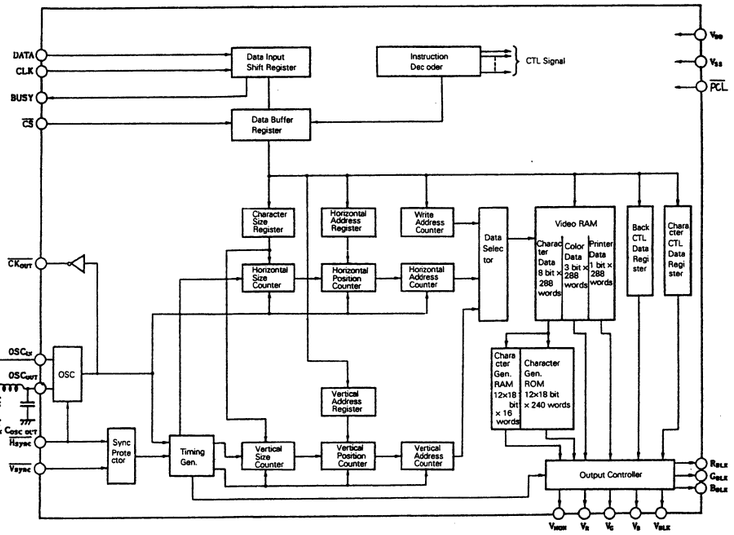

■ UPD71055GB-10 [NEC]
(Parallel Input/Output Port)

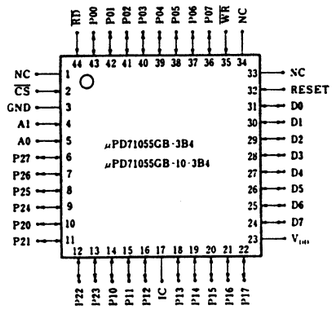

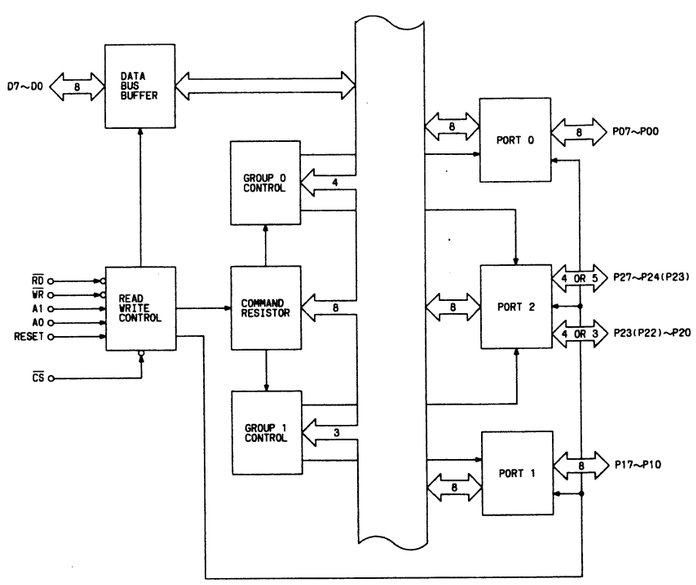

■ PLSC1237 [JVC]
PLSC1262
PLSC1263
(8 Bit Single Chip Microcomputer with 32k Byte One Time P-ROM)

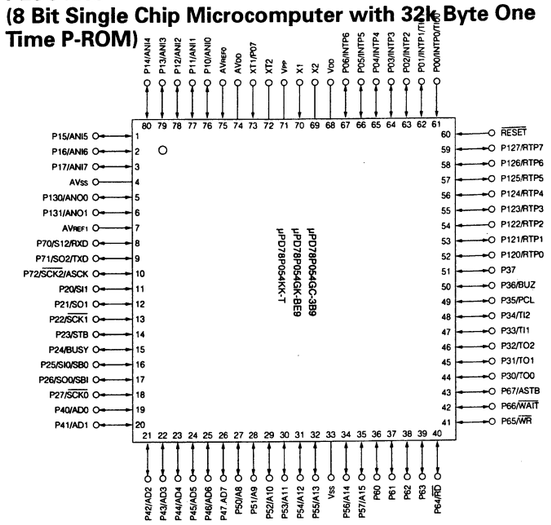

P00-P07	: Port0	SB0, SB1	: Serial Bus	WAIT	: Wait
P10-P17	: Port1	SI0-SI2	: Serial Input	ASTB	: Address Strobe
P20-P27	: Port2	SO0-SO2	: Serial Output	X1, X2	: Crystal (Main System Clock)
P30-P37	: Port3	SCK0-SCK2	: Serial Clock	XT1, XT2	: Crystal (Subsystem Clock)
P40-P47	: Port4	RxD	: Receive Data	RESET	: Reset
P50-P57	: Port5	TxD	: Transmit Data	ANI0-ANI7	: Analog Input
P60-P67	: Port6	ASCK	: Asynchronous Serial Clock	ANO0, ANO1	: Analog Output
P70-P72	: Port7	PCL	: Programmable Clock	AVDD	: Analog Power Supply
P120-P127	: Port12	BUZ	: Buzzer Clock	AVSS	: Analog Ground
P130, P131	: Port13	STB	: Strobe	AVREF0, 1	: Analog Reference Voltage
RTP0-RTP7	: Real-Time Output Port	BUSY	: Busy	VDD	: Power Supply
INTP0-INTP6	: Interrupt From Peripherals	AD0-AD7	: Address/Data Bus	VPP	: Programming Power Supply
TI00, TI01	: Timer Input	A8-A15	: Address Bus	VSS	: Ground
TI1, TI2	: Timer Input	RD	: Read Strobe		
TO0-TO2	: Timer Output	WR	: Write Strobe		

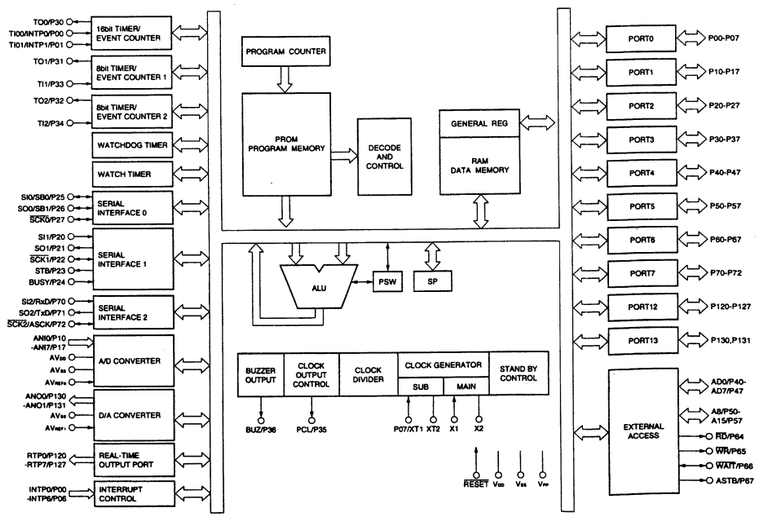

4-95

■ PLSC1236 [JVC]
(8 Bit Single Chip Microcomputer with 60k Byte One Time P-ROM)

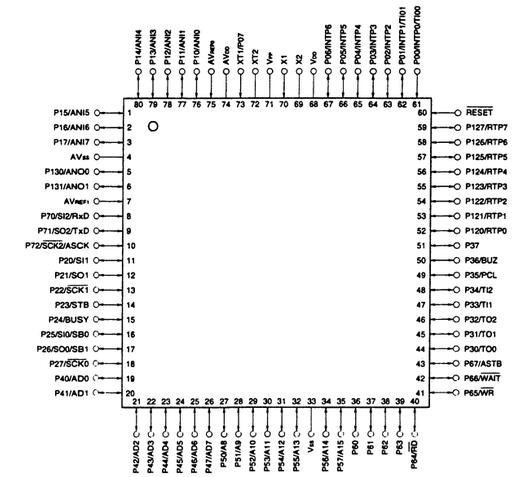

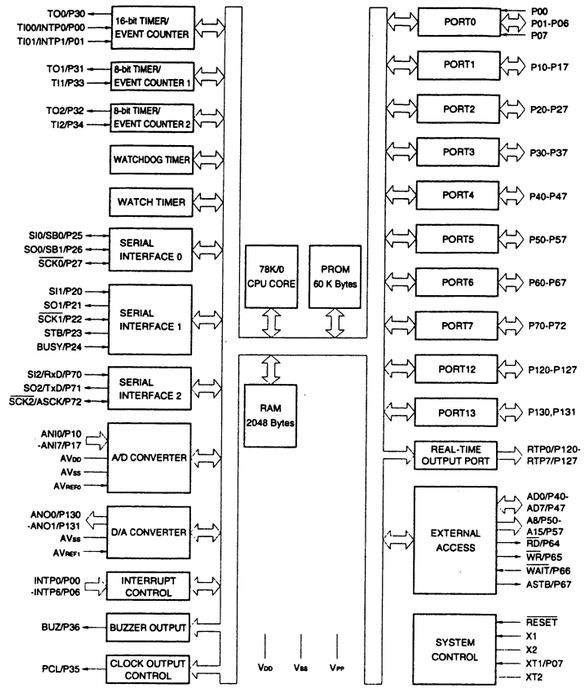

P00-P07 : Port0
P10-P17 : Port1
P20-P27 : Port2
P30-P37 : Port3
P40-P47 : Port4
P50-P57 : Port5
P60-P67 : Port6
P70-P72 : Port7
P120-P127 : Port12
P130, P131 : Port13
RTP0-RTP7 : Real-Time Output Port
INTP0-INTP6 : Interrupt from Peripherals
TI00, TI01 : Timer Input
TI1, TI2 : Timer Input
TO0-TO2 : Timer Output

SB0, SB1 : Serial Bus
SI0-SI2 : Serial Input
SO0-SO2 : Serial Output
SCK0-SCK2 : Serial Clock
RxD : Receive Data
TxD : Transmit Data
ASCK : Asynchronous Serial Clock
PCL : Programmable Clock
BUZ : Buzzer Clock
STB : Strobe
BUSY : Busy
AD0-AD7 : Address/Data Bus
A8-A15 : Address Bus
RD : Read Strobe
WR : Write Strobe

WAIT : Wait
ASTB : Address Strobe
X1, X2 : Crystal (Main System Clock)
XT1, XT2 : Crystal (Subsystem Clock)
RESET : Reset
ANI0-ANI7 : Analog Input
ANO0, ANO1 : Analog Output
AVDD : Analog Power Supply
AVSS : Analog Ground
AVREF0, 1 : Analog Reference Voltage
VDD : Power Supply
VPP : Programming Power Supply
VSS : Ground

■ UPD9438BGK-BE9 [NEC]
(Timing Generator)

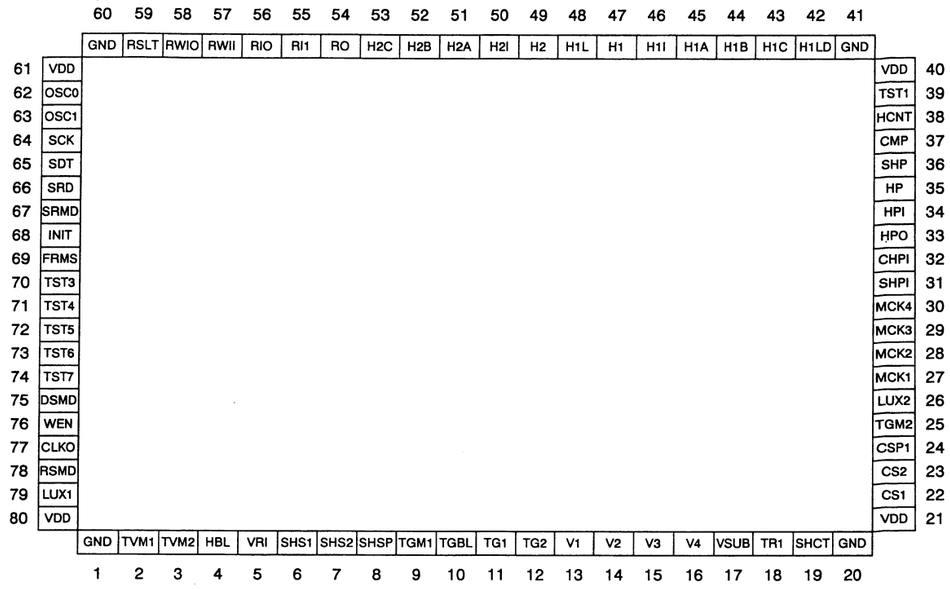

BLOCK DIAGRAM

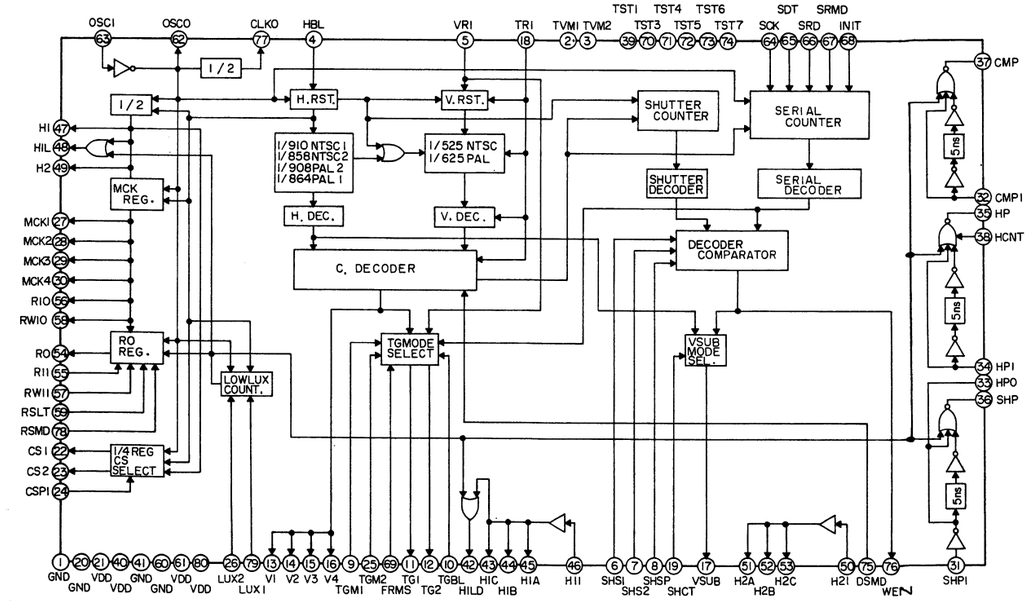

4-96

● Pin function (UPD9438GK)

[Explanation of column]

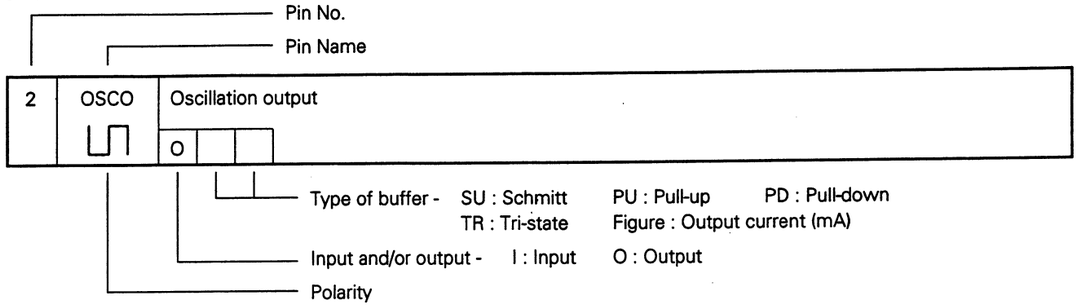

No.	Symbol	Description
1	GND	Grounding
2	TVM1 —	TV mode 1 I PD
3	TVM2 —	TV mode 2 I PD

	NTSC 1 1820 FH	NTSC 2 1716 FH	PAL 2 1816 FH	PAL 1 1728 FH
TVM1	L	H	L	H
TVM2	L	L	H	H

No.	Symbol	Description
4	HBL	Horizontal B lanking input (øHBLK) I SH PU • Horizontal SYNC. input terminal to be connected with IFHB of SYNC generator. The leading edge is detected.
5	VRI	EXT. vertical SYNC input I SH PU • Vertical SYNC. input terminal to be connected with IFVSA of sync generator. The leading edge is detected.
6	SHS1 —	Shutter speed 1 I PD
7	SHS2 —	Shutter speed 2 I PD
8	SHSP —	Shutter speed setting I PD

SHS2	SHS1	SHSP = L	FIELD SHSP = H	FRAME SHSP = H
L	L	1/60	1/60	1/30
L	H	1/100	1/30	1/15
H	L	1/2000	1/7.5	1/3.75
H	H	1/10000	1/3.75	1/1.875

Note: "FRAME" expresses storage time based on TG2 (pin 12) as the reference.

No.	Symbol	Description
9	TGM1 —	Storage Mode 1 I PD • Input terminal for store mode setting. Use this terminal in combination with DSMD (pin 75) and TGM2 (pin 25). (Refer to the last page of this description of pin functions.)
10	TGBL	Transfer gate blanking I PD • Slow shutter speed input for multi-speed shutter • Becomes active as blanking pulse at the rise of pulse.
11	TG1	Transfer gate pulse 1 O 9 • Transfer gate drive pulse to transfer signal from photodiode to the vertical register (V1). (pin 13)
12	TG2	Transfer gate pulse 2 O 9 • Transfer gate drive pulse to transfer signal from photodiode to the vertical register (V3). (pin 15)
13	V1	V. transfer pulse 1 O 9 • Vertical transfer register drive pulse
14	V2	V. transfer pulse 2 O 9 • Vertical transfer register drive pulse
15	V3	V. transfer pulse 3 O 9 • Vertical transfer register drive pulse
16	V4	V. transfer pulse 4 O 9 • Vertical transfer register drive pulse
17	VSUB —	Board shutter pulse O 13 • Board shutter pulse to operate VOD shutter
18	TRI —	Random shutter function reset mode selection L: Sync reset mode H: Sync non-reset mode I PD
19	SHCT	Shutter control I SH PD • Terminal to control shutter speed of multi-speed shutter. • When this terminal is used, set the serial shutter to 1/10000. • High level stops VSUB (pin 17) output.
20	GND	Grounding
21	VDD	+5 V power supply
22	CS1	Color sampling pulse 1 O 9 • Sampling pulse output for color separation sample holding
23	CS2	Color sampling pulse 2 O 9

CSP2	CSP1	CS1	CS2
L	L	MCK1	MCK1
L	H	MCK2	MCK2
H	L	MCK3	MCK3
H	H	MCK4	MCK4

No.	Symbol	Description
24	CSP1 —	Color sampling pulse phase setting 1 I PD • Phases of CS1 (pin 22) and CS2 (pin 23) are settable by this pulse.
25	TGM2 —	Store mode 2 Input terminal for store mode setting. Use this terminal in combination with DSMD (pin 75) and TGM1 (pin 9). (Refer to the last page of this description of pin functions.) I PD
26	LUX2	Low lux mode 2 Low Lux setting terminal 2. L : Corresponding to CDS, H : Corresponding to RDS Refer to the usage example and Lolux mode tables. I PU
27	MCK1	Main clock 1 O 9 • Main clock fck output terminal. • Output signal having the same phase as H1 (pin 47).
28	MCK2	Main clock 2 O 9 • Main clock fck output terminal. • Output signal whose phase is 90° delayed from H1 (pin 47).

4-97

No.	Symbol	Description
29	MCK3	Main clock 3 O 9 • Main clock fck output terminal. • Output signal whose phase is 180° delayed from H1 (No. 47).
30	MCK4	Main clock 4 O 9 • Main clock fck output terminal. • Output signal whose phase is 270° delayed from H1 (No. 47).
31	SHP1	Sample holding pulse input I SH • Input terminal to receive SHP (No. 36) output signal. • Input signal is equivalent to main clock.
32	CMPI	Clamp pulse input I SH • Input terminal to receive SHP (No. 36) output signal. • Input signal is equivalent to main clock.
33	HPO	Half pitch output O 9 • Output signal approx. 20 ns behind of SHP (No. 36) output. • To be connected with HP1 (No. 34) through capacitor and resistor.
34	HPI	Half pitch input I SH • Input terminal for fine adjustment of HP (No. 35) output. • To be connected with HPO (No. 33) through capacitor and resistor.
35	HP	HP Half pitch O 9 • Half pitch signal is used as a sampling one.
36	SHP	Sample holding pulse O 9 • To sample video signal.
37	CMP	Clamp pulse O 9 • To clamp video siganl.
38	HCNT	Half pitch control I SH PD • To fix HP (No. 35) pulse at High level. L : Normal mode output H : High level fixing output
39	TST1	Test pin 1 I PD • Should be open in general.
40	VDD	+5 V power supply
41	GND	Grounding
42	H1LD	H. final gate transfer pulse for 3-CCD O 9 • Horizontal drive pulse output that has High level in horizontal blanking period. • When set to the Lolux mode corresponding to RDS, the central part of drive signal output is taken off. (Refer to the Lolux mode table)
43	H1C	H. transfer pulse for 3-CCD O 13 • Horizontal drive pulse output that has High level in horizontal blanking period
44	H1B	H. transfer pulse for 3-CCD O 13 • Horizontal drive pulse output that has High level in horizontal blanking period
45	H1A	H. transfer pulse for 3-CCD O 13 • Horizontal drive pulse output that has High level in horizontal blanking period

No.	Symbol	Description
46	H1I	H. transfer pulse input for 3-CCD I • Input terminal to distribute signal to horizontal transfer pulse terminals for 3-CCD. • Connect with H1 (No. 47) for use of 3-CCD camera.
47	H1	H. transfer pulse O 13 • Horizontal drive signal output that has High level in horizontal blanking period. • Connect with H1I (No. 46) for use of 3-CCD camera.
48	H1L	H. final gate transfer pulse O 9 • Horizontal drive signal output that has High level in horizontal blanking period. • When set to the Lolux mode corresponding to RDS, the central part of drive signal output is taken off. (Refer to the Lolux mode table)
49	H2	H. transfer pulse O 13 • Horizontal drive signal output that has Low level in horizontal blanking period. • Connect with H2I (No. 50) for use of 3-CCD camera.
50	H2I	H. transfer pulse input for 3-CCD I • Input terminal to distribute signal to horizontal transfer pulse terminals for 3-CCD. • Connect with H2 (No. 49) for use of 3-CCD camera.
51	H2A	H. transfer pulse for 3-CCD O 13 • Horizontal drive signal output that has Low level in horizontal blanking period.
52	H2B	H. transfer pulse for 3-CCD O 13 • Horizontal drive signal output that has Low level in horizontal blanking period.
53	H2C	H. transfer pulse for 3-CCD O 13 • Horizontal drive signal output that has Low level in horizontal blanking period.
54	RO	H. output reset O 9 • CCD output reset pulse terminal. • This pulse is added with DC component and supplied to øR terminal of CCD.
55	RII	H. output reset timing input I PU SH • Input terminal to adjust output timing of RO (No. 54) with external input. • Active when RSLT (No. 59) has High level. To be connected with RIO (No. 56).
56	RIO	H. output reset timing output O 9 • Output terminal to adjust output timing of RO (No. 54) with external input. • To be connected with RII (No. 55).
57	RWII	H. output reset pulse width setting input I PU SH • Input terminal to adjust pulse width of RO (No. 54) with external input. • Active when RSLT (No. 59) has High level. To be connected with RWIO (No. 58).
58	RWIO	H. output reset pulse width setting output O 9 • Output terminal to adjust pulse width of RO (No. 54) with external input. To be connected with RWII (No. 57).
59	RSLT	H. output reset switching I PD • Input terminal to switch setting mode of RO (No. 54) output. L : Internal setting H : External setting
60	GND	Grounding
61	VDD	+5 V power supply
62	OSCO	Oscillator output O • Output terminal of built-in oscillation circuit

4-98

No.	Symbol	Description
63	OSCI	Oscillator input I • Input terminal of built-in oscillator circuit
64	SCK	Serial clock I • Clock input terminal for serial interface. • Reads in at the pulse rise and inputs 1/4 frequency of original oscillation or lower.
65	SDT	Serial data I • Data input terminal for serial interface. Input data is positive logic. • Sequential reading to start with LSB.
66	SRD	Reception enable signal O 9 • Enable signal output terminal for serial interface to inform microprocessor whether it is enabled for data reception or disabled. L : Enabled for data reception H : Disabled for data reception
67	SRMD	Reception mode switching I PD • L : Reception is possible only in V. blanking period. When reception does not finish in V. blanking period : Ineffective • H : Reception is always possible.
68	INIT	Serial reset I • L : Disables serial interface from operation, or resets it forcibly (hard resetting). • H : Enables serial interface for original operation.
69	FRMS	Frame select I PD 1-pixel or 2-pixel read-out field is selectable at a unit of frame. L : Ist and 2nd fields read-out H : 3rd and 4th fields read-out
70	TST3	Test pin 3 I PD • Should be open in general.
71	TST4	Test pin 4 I PD • Should be open in general.
72	TST5	Test pin 5 I PD • Should be open in general.
73	TST6	Test pin 6 I PD • Should be open in general.
74	TST7	Test pin 7 I PD • Should be open in general.
75	DSMD	Device mode I PD • Switching terminal for 1/3-CCD or 2/3-CCD. L: Conforming to 1/3-CCD H: Conforming to 2/3-CCD
76	WEN	Write enable O 13 • Timing pulse output to write data in external memory at slow shutter speed. • At normal shutter speed, output signal is same with VD. • But it becomes 0.5H delayed signal in 2nd field.
77	CLKO	Clock output O 13 • Half divided output of oscillation frequency
78	RSMD	Switching of H. output reset pulse polarity O PD • To switch output polarity of RO (No. 54). L : Positive H : Negative
79	LUX1	Low lux mode I PD • Low lux setting terminal L : Normal mode H: Lolux mode Refer to the low lux mode table.
80	VDD	+5 V power supply

• When CCD used and read-out method

DSMD	TGM2	TGM1	When CCD used	Read-out method
L	L	L	1/3 CCD	Field
L	L	H	1/3 CCD	Frame
L	H	L	Inhabit	Inhabit
L	H	H	Inhabit	Inhabit
H	L	L	2/3 CCD	Field
H	L	H	2/3 CCD	Frame
H	H	L	2/3 CCD	2 pixels
H	H	H	2/3 CCD	1 pixel

• Lolux mode table

LUX2	LUX1	Mode
L	L	Normal
L	H	CDS
H	L	Normal
H	H	RDS

[NTSC] 2/3" CCD H-TIMING

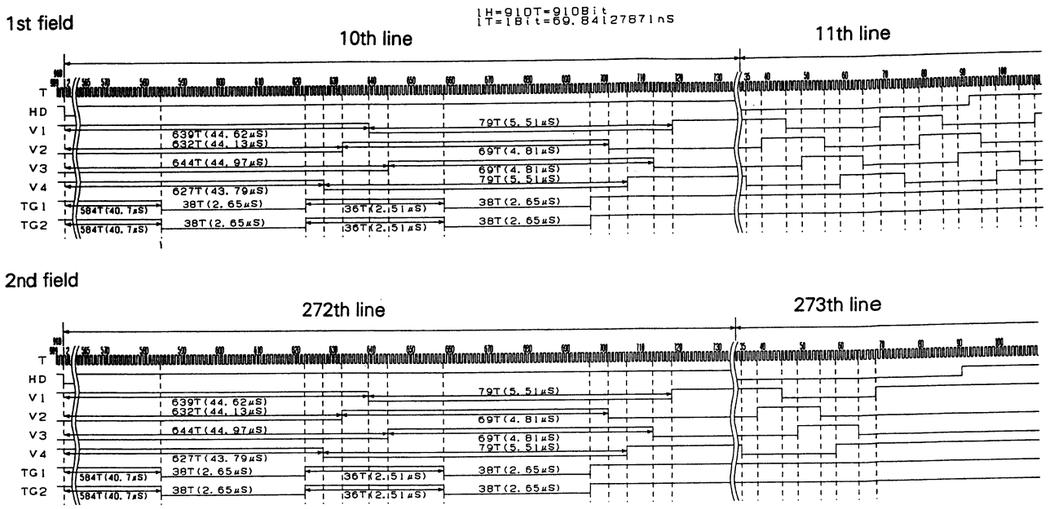

[NTSC] 2/3" CCD H-TIMING

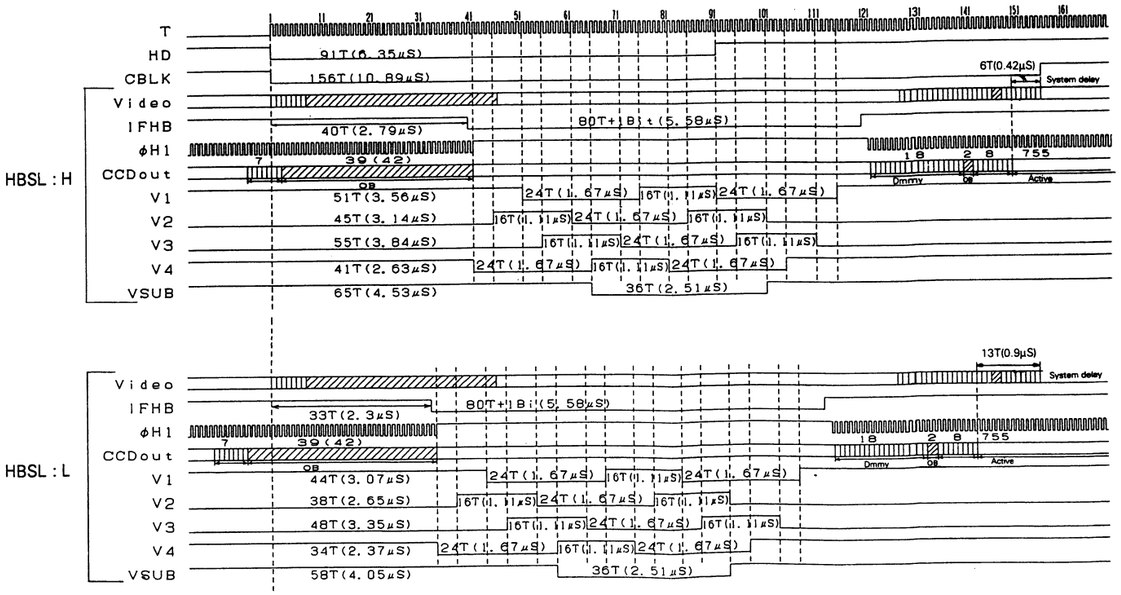

[NTSC] 2/3" CCD V-TIMING (1st field)

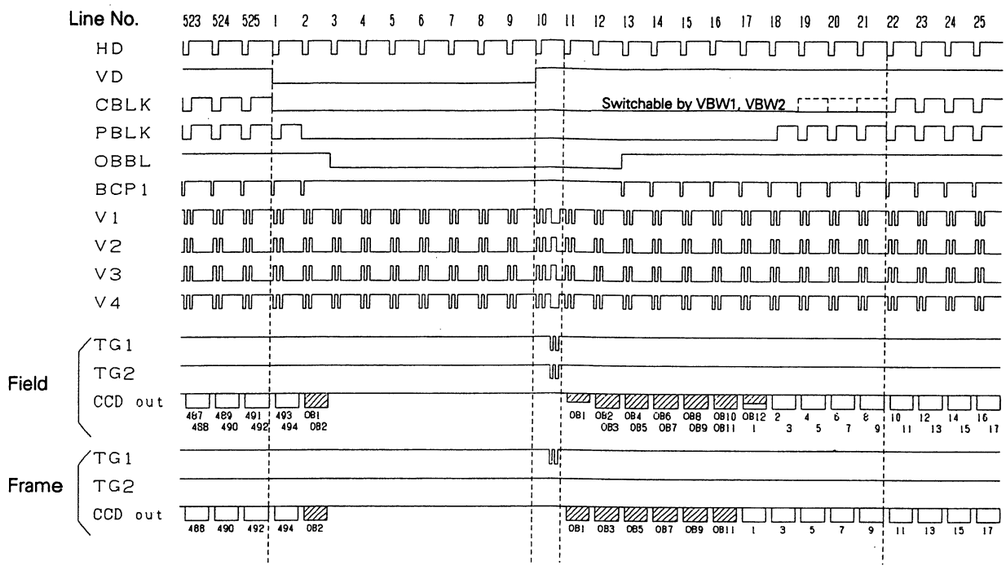

[NTSC] 2/3" CCD V-TIMING (2nd field)

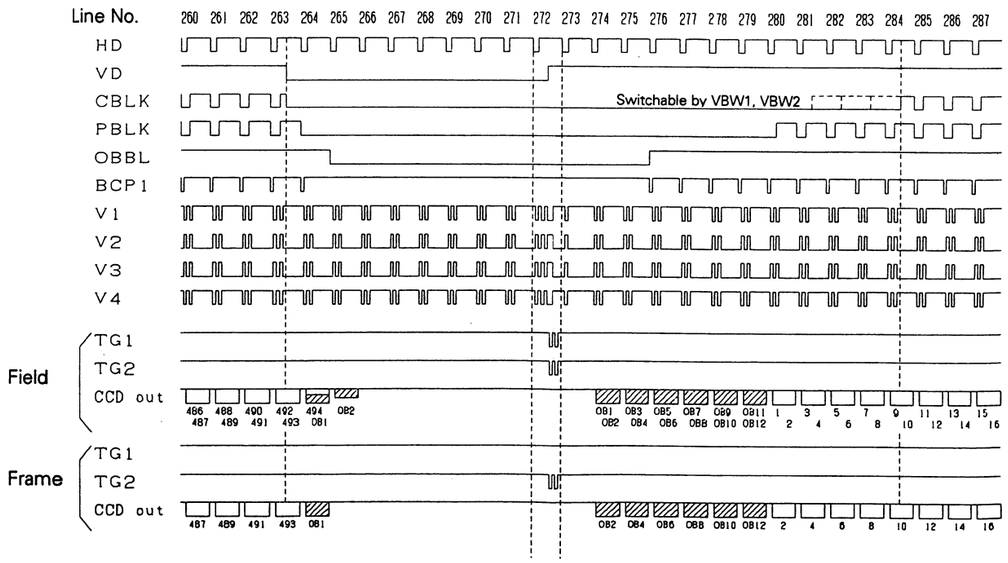

■ **JCL0030 [JVC]**
(Digital Channel Integrated Circuit (DCI) for Play back)

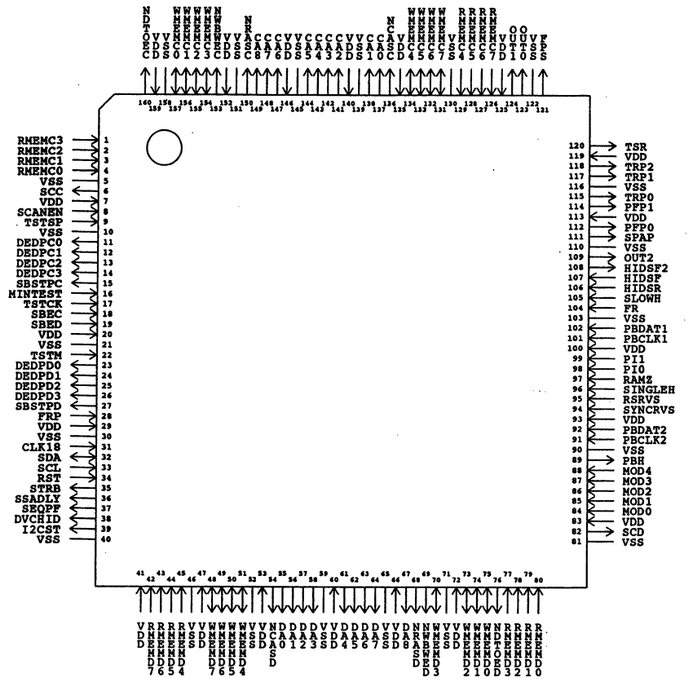

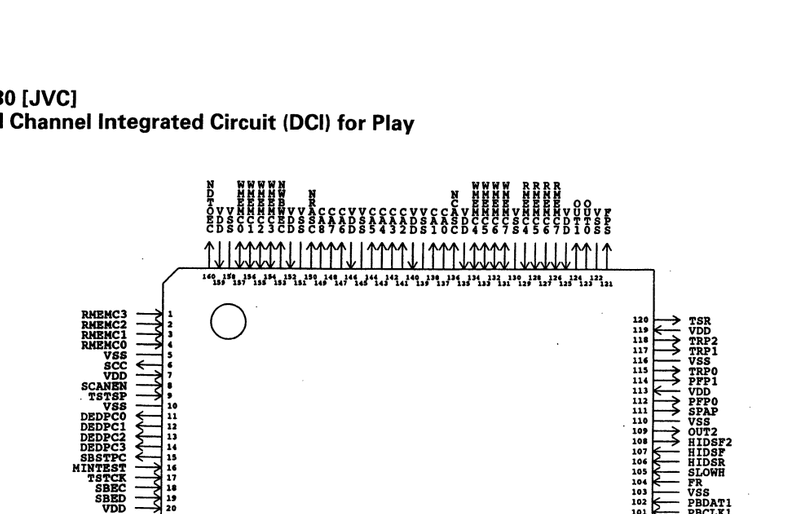

4-100

■ JCS0027 [JVC] (SSG)

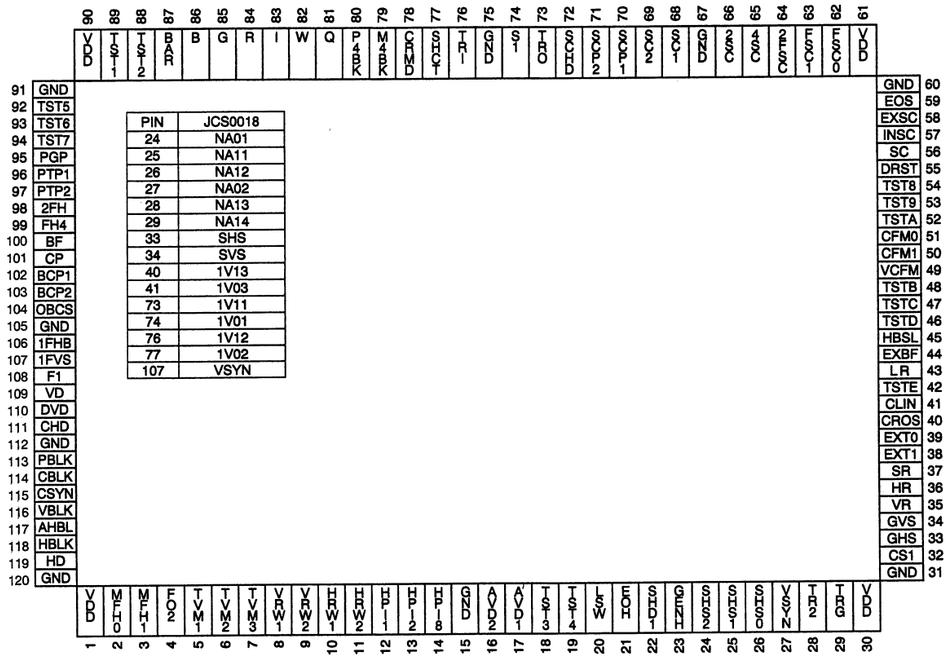

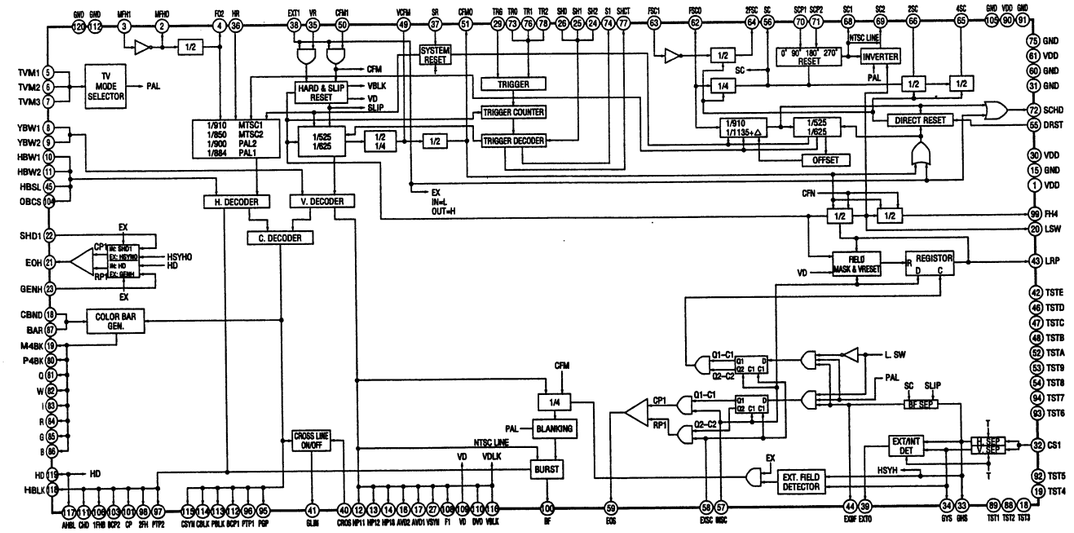

Terminal Specifications of JCS0027 (4th Revision)

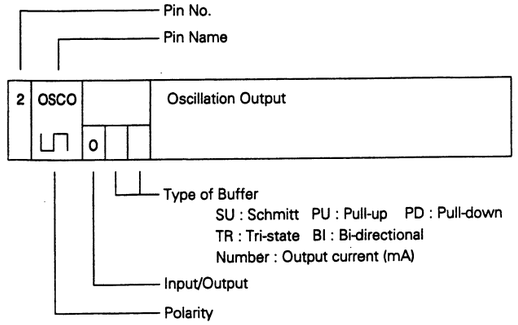

Pin No.	Pin Name	Function
1	VDD	+5 Power supply
2	MFHO	Synchronizing oscillation output Output terminal for built-in oscillator O
3	MFHI	Synchronizing oscillation input Input terminal for built-in oscillator I
4	F02	1/2 divided output 1/2 divided output of synchronizing oscillator O 9
5	TVM1	TV mode 1 I PU
6	TVM2	TV mode 2 I PU
7	TVM3	TV mode 3 I PU

	NTSC1 1820FH	NTSC2 1716FH	PAL2 1816FH	PAL1 1728FH	PALM 1716FH	SECAM 1716FH
TVM1	L	H	L	H	L	H
TVM2	L	L	H	H	L	L
TVM3	L	L	L	L	H	H

Pin No.	Pin Name	Function
8	VBW1	V. blanking control 1 I PU
9	VBW2	V. blanking control 2 I PU

VBW1	L	H	L	H
VBW2	L	L	H	H
NTSC1	21H	20H	19H	18H
NTSC 2	21H	20H	19H	18H
PAL1	26H	25H	24H	23H
PAL2	26H	25H	24H	23H
PALM	21H	20H	19H	18H
SECAM	26H	25H	24H	23H

Pin No.	Pin Name	Function
10	HBW1	H. blanking control 1 I PU
11	HBW2	H. blanking control 2 I PU

HBW1	L	H	L	H
HBW2	L	L	H	H
NTSC1	157T	156T	154T	152T
NTSC2	143T	147T	146T	152T
PAL1	162T	159T	156T	153T
PAL2	170T	167T	164T	161T
PALM	148T	147T	146T	144T
SECAM	162T	159T	156T	153T

Pin No.	Pin Name	Function
12	HP11	H. pulse 11 H. pulse to be active at 11H, 13H, 15H and 17H. O 9
13	HP12	H. pulse 12 H. pulse to be active at 12H and 14H. O 9
14	HP18	H. pulse 18 H. pulse to be active at 18H. O 9
15	GND	Ground
16	AVD2	Pre-vertical drive pulse 2 Vertical drive pulse whose phase is 8H ahead of VD pulse. Functions as subcarrier blanking for SECAM system. O 9
17	AVD1	Pre-vertical drive pulse 1 Vertical drive pulse whose phase is 1H ahead of VD pulse. O 9
18	TST3	Test terminal 3 Set this terminal open in general. I PU
19	TST4	Test terminal 4 Set this terminal open in general. I PU
20	LSW	Line switch Half-divided FH output. Switches color difference signal of neighboring lines by 180° in phase for PAL system. O 9
21	EOH	H. synchronizing digital phase comparison output As compared with leading edge of SHDI; when internal HD has advanced phase: Low level, when internal HD has lagged phase: High level, when internal HD is in-phase: High impedance. O TR 13
22	SHDI	H. synchronizing digital phase comparison input (trailing detection) Input of horizontal drive signal originating from subcarrier. Active when EXTI is low level. When this is inactive, GHS (No. 33) is internally connected. I SH PU
23	GENH	H. synchronizing digital phase comparison input (trailing detection) Input for external synchronization, horizontal synchronization and phase adjustment. Active when EXTI is high level. When this is inactive, HD (No. 119) is internally connected. I SH PU

Pin No.	Pin Name	Function
24	SHS2	Shutter speed setting 2 Random shutter setting function (Refer to the specifications.) I PU
25	SHS1	Shutter speed setting 1 Random shutter setting function (Refer to the specifications.) I PU
26	SHS0	Shutter speed setting 0 Random shutter setting function (Refer to the specifications.) I PU

SHS2	SHS1	SHS0	Shutter speed NTSC	Shutter speed PAL
L	L	L	1/60	1/50
L	L	H	1/100	1/120
L	H	L	1/250	
L	H	H	1/500	
H	L	L	1/1000	
H	L	H	1/2000	
H	H	L	1/4000	
H	H	H	1/10000	

Pin No.	Pin Name	Function
27	VSYN	V. sync. output Vertical synchronizing signal of V. EQ pulse width. O 9
28	TR2	Sync. reset mode setting For sync. reset mode setting when random shutter setting functions is activated. I PU
29	TRG	Trigger input Trigger input to activate random shutter setting function. (Refer to the random shutter specifications.) I PU
30	VDD	+5V power supply
31	GND	Ground
32	CSI	Ext. composite sync. signal input To input external composite synchronizing signal for horizontal and vertical separation and ext. sync. signal input detection. I SH PU
33	GHS	Horizontal separate sync. Horizontal separate signal of external composite synchronizing signal. 1/2 equivalent pulse is not included. O 9
34	GVS	Vertical separate sync. Vertical separate signal of external composite synchronizing signal. 1/2 equivalent pulse is not included. O 9

Pin No.	Pin Name	Function
35	VR	Vertical reset External synchronizing input by slip system. If this system is input in vertical sync. period, hard reset is activated. Input in other period stops internal counter for a period of pulse width. I PU
36	HR	Horizontal reset Presets horizontal component 1T before rise of HD. Jitters in a period shorter than 140 ns are absorbed. However, operation is not secured for continuous input. I PU
37	SR	System reset Inside of IC is forcibly initialized regardless of internal or external synchronization. VR and HR inputs are ineffective. Jitters in a period shorter than 140 ns are absorbed. I PU
38	EXTI	Internal/External synchronization setting input L : Internal synchronization H : External synchronization I PD
39	EXTO	Internal/External synchronization setting output L: Without CSI input After detection of no SHS, another SHS is not detected for a period of 8 fields. H: With CSI input After detection of SHS, 200 or more SHS's are detected in 1 vertical period. O 9
40	CROS	Cross ON/OFF input L: To stop cross output H: To activate cross output operation For detail, refer to supplementary specifications of respective terminals. I PD
41	CLIN	Cross output To output a cross in the center of screen. For detail, refer to supplementary specifications of respective terminals. O 9
42	TSTE	Test terminal E Set this terminal open in general. I PU
43	LR	Line reset When EXTI is external synchronization (High level), setting signal is supplied to LSW. When internal burst is ahead of external burst in phase, High level is output. When internal burst is behind external burst in phase, Low level is output (for 6 clocks of SC). Phase comparison is not operated for one field after output. For detail, refer to supplementary specifications of respective terminals. O 9

Pin No.	Pin Name	Function
44	EXBF	Brust flag separate output With detection of one or more H. sync pulse from CSI input, pulse whose width is for 6 cycles of subcarrier is output. For details, refer to supplementary specifications of respective terminals. O 9
45	HBSL	H. blanking reset To switch output position of IFHB (106). L: System delay 900 ns approx. H: System delay 450 ns approx. I PU
46	TSTD	Test terminal D Set this terminal open in general. BI PU 9
47	TSTC	Test terminal C Set this terminal open in general. BI PU 9
48	TSTB	Test terminal B Set this terminal open in general. I PU
49	VCFM	VTR color frame Color frame for VTR exclusively. 2-field period for NTSC1, NTSC2 and PAL. 4-field period for PAL1, PAL2 and SECAM. O 9
50	CFMI	Color frame input Effective with EXTI being low level. Used for color frame control in external synchronization. Reset to synchronizing circuit by the slip system. I SH PU
51	CFMO	Color frame output Pulse output at the beginning of every color frame. 4-field period for NTSC1 and NTSC2. 8-field period for PAL1, PAL2, PALM and SECAM. O 9
52	TSTA	Test terminal A Set this terminal open in general. I PU
53	TST9	Test terminal 9 Set this terminal open in general. I PU

Pin No.	Pin Name	Function
54	TST8	Test terminal 8 Set this terminal open in general. I PU
55	DRST	Direct reset terminal When EXTI is low level, the following operations are realized. To switch reset operation of horizontal counter for subcarrier. To reset color frame synchronizing with horizontal counter with High level; To reset color frame with Low level. I PU
56	SC	Subcarrier output To monitor subcarrier signal connected internally with digital phase comparator. When phase of SC1 (68) is 0°, this output is inphase. O 9
57	INSC	Internal subcarrier input Shall be connected with SC (56). Effective when EXBF is low level. Pulse rise is detected. I
58	EXSC	External subcarrier input Effective when EXBF is low level. Pulse rise is detected. I
59	EOS	Digital phase comparison output for subcarrier As compared with leading edge of EXSC; when internal SC has advanced phase : Low level, when internal SC has lagged phase : High level, when internal SC is in phase : High impedance. O TR 13
60	GND	Ground
61	VDD	+5V power supply
62	FSCO	Oscillator output for subcarrier O
63	FSCI	Oscillator input for subcarrier I
64	2FSC	Double subcarrier output Half-divided oscillator output for subcarrier O 13

4-102

Pin No.	Pin Name	Function
65	4SC	1/4 subcarrier output 1/4-divided output of subcarrier frequency O 9
66	2SC	1/2 subcarrier output 1/2-divided output of subcarrier frequency O 9
67	GND	Ground
68	SC1	Subcarrier 1 Subcarrier frequency output. Phase is changed by SCP1 and SCP2. In PAL mode, phase is not changed every H. O 9
69	SC2	Subcarrier 2 Subcarrier frequency output whose phase is 90° ahead of SC1. Phase is changed by SCP1 and SCP2. In PAL mode, phase is inverted by 180° every H. O 9
70	SCP1	Subcarrier select 1 Note: SC2 is expressed based on SC1. I PD
71	SCP1	Subcarrier select 2 I PD
72	SCHD	Subcarrier horizontal driver Horizontal drive pulse originating from subcarrier frequency. O 13
73	TR0	Random shutter control system setting input To set random shutter control system. L: 8-stage default control, H: Pulse width continuous control (Refer to the specifications of random shutter setting function.) I PD
74	SI	Stroboscope index output In normal operation, this output is for stroboscopic lamp emitting time. In random shutter operation, this output is for video output time. (Refer to the specifications of random shutter setting function.) O 9

SCP2	SCP1	SC1	SC2
L	L	0°	90° ahead (270°)
L	H	90°	90° ahead (0°)
H	L	180°	90° ahead (90°)
H	H	270°	90° ahead (180°)

Pin No.	Pin Name	Function
75	GND	Ground
76	TR1	Random reset system setting input To determine reset system setting system. L: SYNC reset system, H: SYNC non-reset system. (Refer to the specifications of random shutter setting function.) I PD
77	SHCT	Shutter control output Electronic shutter control signal. Shall be connected to SHCT (19) of TG (μPD9438GK). (Refer to the specifications of random shutter setting function.) O 9
78	CBMD	SMPTE/FULL To switch color bar signal to SMPTE or FULL. L: Full Field mode H: SMPTE mode — Effective only with BAR signal of low level. I PU
79	M4BK	Color bar signal o 9
80	P4BK	Color bar signal o 9
81	Q	Color bar signal o 9
82	W	Color bar signal o 9
83	I	Color bar signal o 9

	BAR	CBMD	I	W
NTSC1 NTSC2	H L L	X H L	L Effective L	L Effective (75%W) L
PAL1 PAL2	H L L	X H L	L Effective L	L Effective (75%W) Effective (100W)
PALM	H L L	X H L	L Effective L	L Effective (75%W) Effective (100W)
SECAM	H L L	X H L	L Effective L	L Effective (75%W) L

	Q	P4BK	M4BK
NTSC1 NTSC2	L Effective L	L Effective L	L Effective L
PAL1 PAL2	L Effective L	L Effective L	L Effective L
PALM	L Effective L	L Effective L	L Effective L
SECAM	L Effective L	L Effective L	L Effective L

Pin No.	Pin Name	Function
84	R	Color bar signal O 9
85	G	Color bar signal O 9
86	B	Color bar signal O 9
87	BAR	Color bar control (ON/OFF) I PU
88	TST2	Test terminal 2 Set this terminal open in general. I PU
89	TST1	Test terminal 1 Set this terminal open in general. I PU
90	VDD	+5V power supply
91	GND	Ground
92	TST5	Test terminal 5 Set this terminal open in general. I PU
93	TST6	Test terminal 6 Set this terminal open in general. I PU
94	TST7	Test terminal 7 Set this terminal open in general. O 9

	BAR	C3MD	B	G	R
NTSC1 NTSC2	H L	X X	L Effective	L Effective	L Effective
PAL1 PAL2	H L	X X	L Effective	L Effective	L Effective
PALM	H L	X X	L Effective	L Effective	L Effective
SECAM	H L	X X	L Effective	L Effective	L Effective

BAR	R, G, B, I, Q, W, P4BK, M4BK
L	Effective
H	Fixed at Low level

Pin No.	Pin Name	Function
95	PGP	Pilot gate pulse Uniform voltage level of two signals, one passes the 1FH delay line and the other does not pass the 1H line, with each other in order to compensate attenuation caused by the delay line. O 9
96	PTP1	Pilot pulse 1 Uniform voltage level of two signals, one passes the 1H delay line and the other does not pass the 1H line, with each other in order to compensate attenuation caused by the delay line. O 9
97	PTP2	Pilot pulse 2 Used to control video level. O 9
98	2FH	Double FH O 9
99	FH4	1/4FH Half-divided output of LSW. Equivalent to 25 Hz in PAL mode. O 9
100	BF	Burst flag Regulates period to insert subcarrier into back porch of horizontal sync. signal. Functions to switch chromaticity signal for every line in SECAM mode. O 9
101	CP	Clamp pulse Signal to clamp reference voltage of black level. O 9
102	BCP1	Black clamp pulse 1 Fixes black level of CCD output signal. O 9
103	BCP2	Black clamp pulse 2 Fixes black level of CCD output signal (at every H output). O 9
104	OBCS	Optical black pulse select Switching of output position of horizontal BCP1 and BCP2. L: Frontward output H: Backward output I PU

NTSC1	NTSC2	PAL1	PAL2	PALM	SECAM
31.468	31.468	31.25	31.25	31,468	31.25

4-103

Pin No.	Pin Name	Function
105	GND	Ground
106	IFHB	Interface horizontal blanking Output pulse that is narrower than HBLK both in leading edge and trailing edge. 0 9
107	IFVS	Interface vertical synchronization Normal function: To output vertical synchronization signal having the same pulse width of V. EQ pulse. Random shutter setting function: To output the same signal as V. sync. signal in the fall time. 0 9
108	FI	Field index Field discrimination signal. L: Field that HD and VD fall at the same time. H: Field that there is a time lag of 0.5H in falling between HD and VD. 0 9
109	VD	Vertical drive pulse Pulse output at the beginning of every field. Used as the vertical timing standard for the set. 0 9
110	DVD	Delayed vertical drive pulse Vertical drive signal that lags behind VD pulse. Controls camera's scanning timing and regulates activation time of sawtooth waveform of vertical deflection circuit. 0 9
111	CHD	Delayed horizontal drive pulse Controls camera's scanning timing. Regulates activation time of sawtooth waveform of horizontal deflection circuit. 0 9
112	GND	Ground
113	PBLK	Pre-blanking Composite blanking signal used for video processing. As compared with CBLK signal, this signal is narrower in the leading edge. 0 9
114	CBLK	Composite blanking Horizontal and vertical composite blanking signal. 0 9
115	CSYN	Composite sync. Composite synchronizing signal comprising of four signals of HSYN, VSYN, EQ and SAW. 0 9
116	VBLK	V. blanking Vertical blanking signal whose pulse width can be changed with VBW1 and VBW2. 0 9
117	AHBL	Pre-horizontal blanking Pulse that HBLK is advanced in breaking of leading edge. 0 9
118	HBLK	H. blanking Horizontal blanking pulse whose pulse width can be changed with HBW1 and HBW2. 0 9
119	HD	H. drive Pulse synchronized with beginning of respective lines. Used as horizontal timing standard of the set. 0 13
120	GND	Ground

■ JCS0028 [JVC]
(H, V Timing Generator)

(Top View)

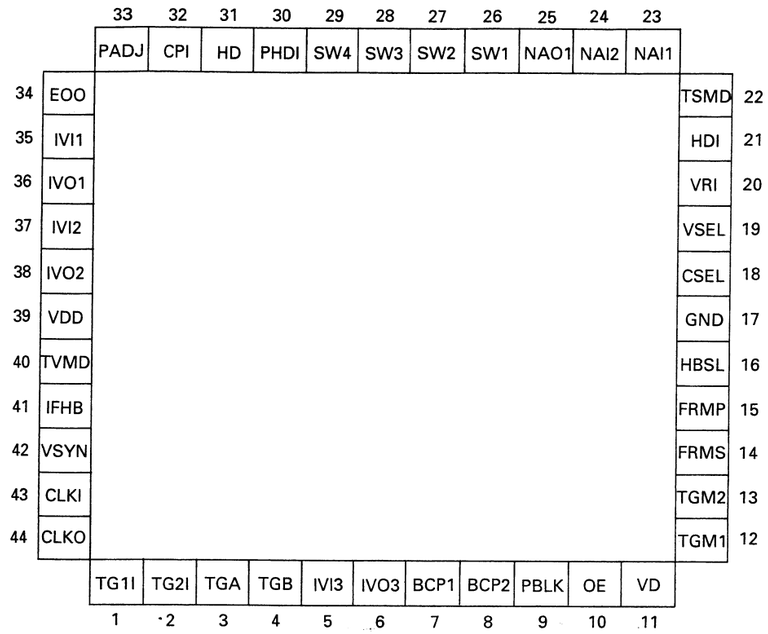

BLOCK DIAGRAM

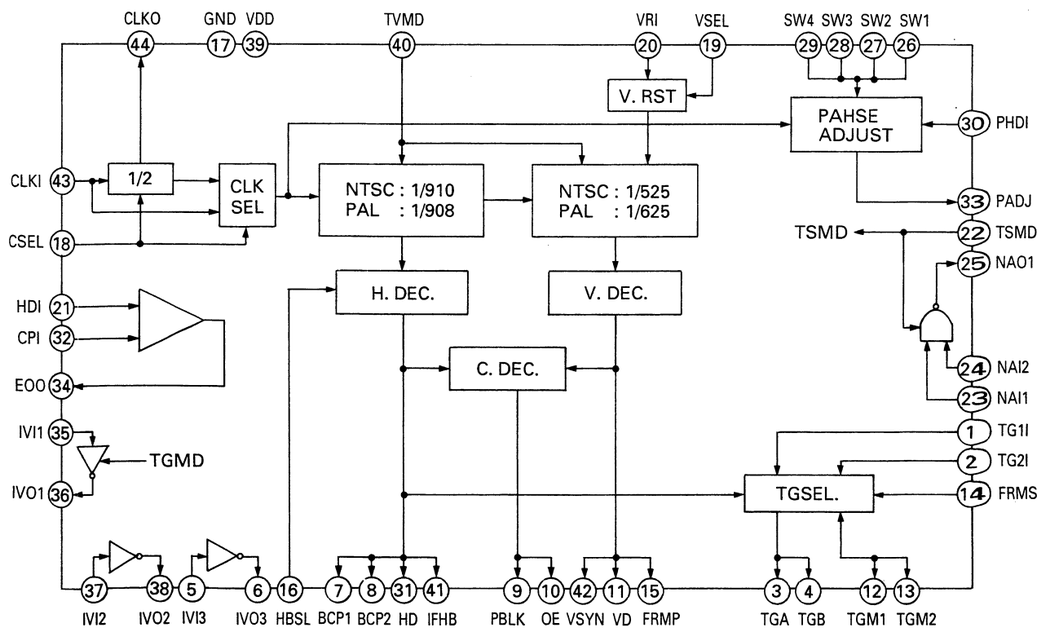

PIN SPECIFICATIONS

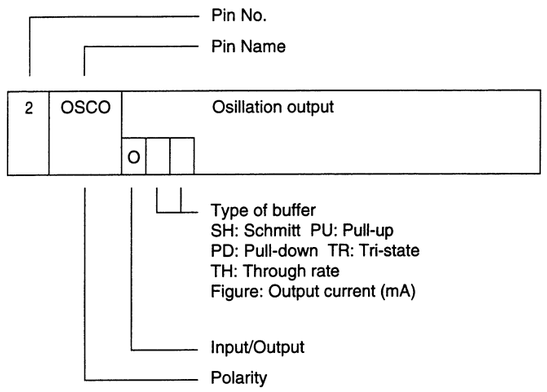

No.	Symbol	Description
1	TG1 I	Transfer Gate 1 Input Connect µPD9438AGK (11) If not used, do not change the level. I
2	TG2 I	Transfer Gate 2 Input Connect µPD9438AGK (12) If not used, do not change the level. I
3	TGA	Transfer Gate A Output Electric charge transfer pulse output from TG1 I (1) for øV1A and øV3A use. O 9
4	TGB	Transfer Gate B Output Electric charge transfer pulse output from TG2 I (2) for øV1B and øV3B use. O 9
5	IVI3	Common Invert Input 3 If not used, do not change the level. I
6	IVO3	Common Invert Output 3 The invert output of IVI3 (5). O 9
7	BCP1	Black Clamp Pluse 1 Fixing the black level of CCD output signal. But, outputting per H. O 9
8	BCP2	Black Clamp Pluse 2 Fixing the black level of CCD output signal. But, outputting per H. O 9
9	PBLK	Preblanking Used in process of picture treatment to blank the compound flying-back lines. This PBLK has a syape of narrow fore edge compared with CBLK. O 9
10	OE	ODD-EVEN The signal to distinguish the ODD and EVEN. L: ODD field, H: EVEN field O 9
11	VD	Vertical Drive The vertical REF. timing, which is included in the pulse set, output ahead of each field. O 9
12	TGM1	Read Out Mode 1 When both of TGM1 (12) and TGM2 (13) are used, it is possible to set the READ OUT MODE. I PD
13	TGM2	Read Out Mode 2 I PD
14	FRMS	Frame Select A/B frame switching terminal for 1 pixel read-out. L: A frame (TG3B, TG3A, output only) H: B frame(TG1B, TG1A, output only) I PD
15	PRMP	Frame Pulse One cycle of 4 fields output pulse. When connecting to FRMS (14), A/B frame is capable of being selected automatically. O 9
16	HBSL	Interface Horizontal Blanking Select Position switching of IFHB (41). L: System delay 900 ns approx. H: System delay 450 ns approx. I PU
17	GND	Grounding
18	CSEL	Clock Select It is used to select the frequency input clock. L: 14.318 MHz (NTSC), 14.187 MHz (PAL), H: 28.636 MHz (NTSC), 28.37MHz (PAL) I PD
19	VSEL	VD/V SYNC Select It is used to select signals that are input to VRI (20). L: VSYNC signal input, H:VD signal input (PBLD ends before 3H). I PD
20	VRI	EXT. Vertical SYNC Input VSYNC/VD signals are selected according to VSEL (19). Depending on the input, the other IC and vertical SYNC may be taken off. I SH
21	HDI (RPI)	EXT. Horizontal SYNC Input (Ref. input for digital phase comparator) Depending on the input of HD signal, the horizontal SYNC may be taken off. (To detect when the input signal goes off.) I SH
22	TSMD	Test Mode Switching Normally set to open. L: Normal operation H: Common NAND (23-25) and common invert (35 and 36) become test terminals. I PO
23	NAI1	Common NAND Input 1 If not used, fix the level. I

TGM2	TGM1	Read Out Mode Set
L	L	4 pixels read-out (field)
L	H	3 pixels read-out
H	L	2 pixels read-out (frame)
H	H	1 pixels read-out

No.	Symbol	Description
24	NAI2	Common NAND Input 2 If not used, fix the level. I
25	NAO1	Common NAND Output 1 The NAND outputs of NAI1 (20) and NAI2 (21). BI 9
26	SW1	Delay Set 1 1 step = 70 ns approx. I PD
27	SW2	Delay Set 2 I PD
28	SW3	Delay Set 3 I PD
29	SW4	Delay Set 4 I PD
30	PHDI	Phase Adj. Input To detect when the HD input for phase adj. circuit goes off. If not used, fix the level. I
31	HD	Horizontal Drive The horizontal timing signal, which is included in the pulse set, synchronized with start of each line, and the REF. signal used for SYNC. O 13
32	CPI	Comparison Input for Digital Phase Comparator To detect when the input signal goes off. I SH
33	PADJ	Phase Adj. Output For outputting 2.3µS width delayed pulse the value of which is set by SW1~SW4 (26, 27, 28 and 29) after PHD1 (30) has gone off. O 9
34	EOO	Digital Phase Comparison Output CPI's relation with RPI: Same phase: High impedance Leading phase: Low level Delayed phase: High level O TR 9

Step	SW4	SW3	SW2	SW1	Cont value
1	L	L	L	L	0
2	L	L	L	H	1
3	L	L	H	L	2
4	L	L	H	H	3
5	L	H	L	L	4
6	L	H	L	H	5
7	L	H	H	L	6
8	L	H	H	H	7
9	H	L	L	L	8
10	H	L	L	H	9
11	H	L	H	L	10
12	H	L	H	H	11
13	H	H	L	L	12
14	H	H	L	H	13
15	H	H	H	L	14
16	H	H	H	H	15

No.	Symbol	Description
35	IVI1	Common Invert Input 1 If not used, fix the level. I
36	IVO1	Common Invert Output 1 Invert output of IVI1 (35). BI 9
37	IVI2	Common Invert Input 2 If not used, fix the level. I
38	IVO2	Common Invert Output 2 Invert output of IVI1 (37). O 9
39	VDD	+5V Power Supply
40	TVMD	TV Mode Switching Switching of NTSC and PAL L: NTSC mode, H: PAL mode I PD
41	IFHB	Interface Horizontal Blanking The pulse output with narrow leading and later edges compared with HCBLK. The position of output changes depending on HBSL (16). O 9
42	VSYN	Vertical SYNC. The vertical SYNC output in the period of vertical EQ pulse. O 9
43	CLKI	Clock Input 28 MHz, 14 MHz clock input can be selected by CSEL (15). I
44	CLKO	Clock Output When 28 MHz is input to CLKI (43), half-divided frequency is output. When 14 MHz is input to CLKI (43), 14 MHz is output. O 9

■ JCS0048 [JVC]
(Digital Signal Processor)

(Top View)

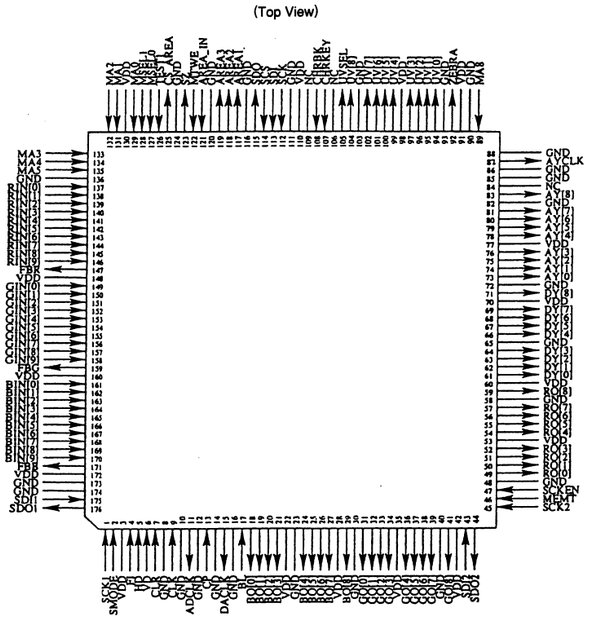

■ LM837M-X [NATIONAL SEMICONDUCTOR]
(Low Noise Quad Operational Amplifier)

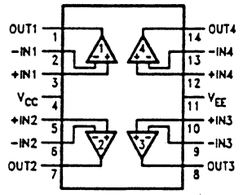

Top View

■ LMC6082IM-X [National Semiconductor]
(Precision CMOS Dual Op.Amp.)

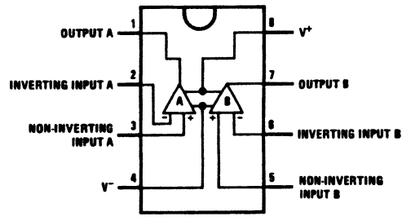

Top View

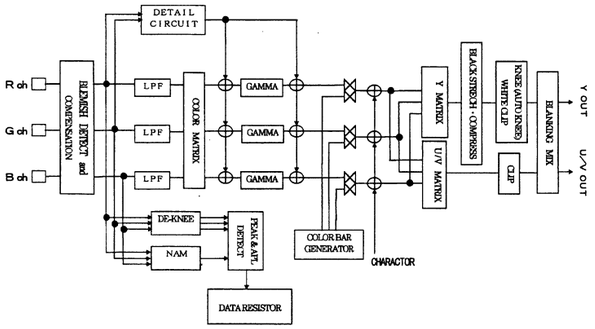

4-106

SECTION 5
EXPLODED VIEW AND ASSEMBLY LIST

● **SAFETY PRECATION**

Parts identified by the ⚠ symbol are critical for safety.
Replace only with specified parts numbers.

● **NOTE**

Parts not denoted by parts numbers are not supplied by JVC.

■ CAMERA HEAD ASSEMBLY PARTS LIST M1

M1MM

Symbol No.	Part No.	Part Name	Description
1	SC10221-001	FRONT FRAME	
2	SC44847-150	SHIELD TUBE	
3	SC42550-011	C HOLDER	
4	SC45239-003	LENS CONNECTOR BRACKET	
5	SCV1938-12S	LENS CONNECTOR	
6	MLSC0691-001	WIRE ASSEMBLY	
7	SC31363-011	FILTER KNOB	
8	SC46312-001	GEAR HOLDER	
9	SC20689-001	DR BRACKET	
10	SC44828-011	KNOB	
11	SC43825-002	CAP	
12	SCV0238-06S	VF CONNECTOR	
13	MLSC0690-002	WIRE KIT	
14	SCV2631-001	FERRITE CORE	
15	SC32164-001	FILTER BASE	
16	SC44939-001	SPACER	
17	SC44508-012	FILTER SHAFT	
18	QYWFM416525	PLASTIC WASHER	
19	SC44505-001	F.I GEAR	
20	SC46225-001	F.I SHAFT	
21	SC31365-001	FILTER WHEEL	
22	SC44651-001	FILTER	CLEAR, 3200K
23	SC44653-001	FILTER	BROWN, 1/4ND (E/EC)
	SC44652-001	FILTER	OREANGE, 5600K (U)
24	SC44652-001	FILTER	OREANGE, 5600K (E/EC)
	SC44653-031	FILTER	BROWN, 1/16 ND (U)
25	SC44653-031	FILTER	BROWN, 1/16 ND (E/EC)
	SC45117-001	FILTER	EFFECT (CROSS) (U)
26	SC45118-002	FILTER SHEET	
27	SC44649-001	F.W.SHAFT	
28	Q03093-841	PLASTIC WASHER	
29	SC44506-001	FILTER STOPPER	
30	SC44627-001	FILTER SPRING	
31	SC31364-004	FILTER COVER	
32	SC44676-005	FILTER CAP ASSEMBLY	
33	SC83183-004	FILTER BOARD	
34	QGA1501C1-05	CONNECTOR	
⚠ 35	SCM0986-P0A	OP BLOCK ASSEMBLY	(E/EC)
⚠ 35	SCM0986-N0A	OP BLOCK ASSEMBLY	(U)
⚠ 35A	SCV2803-3009B	FFC WIRE	<ISB/ISG/ISR TO DR>
35B	SC44704-002	SCREW	
35C	SC31370-001	MOUNT RING	
35D	SC40779-001	MOUNT SCREW	
36	SC46375-001	OP BRACKET	
37	PU49485-4	WIRE CLAMP	
38	SC46372-340	SHIELD TUBE	
39	SC46381-001	MT CUSHION	
40	SC43021-004	CUSHION	
41	QQR0895-008	FPC CORE	
42	QQR0490-001	FILTER	
43	SCV2728-001	FILTER	
44	PRD30030-162	PAD	
45	SC46422-001	CUSHION	
46	SC46420-001	PLATE	
S29	QYSDSP2605Z	SCREW	M2.6 x 5
S31	QYSDSP3006M	SCREW	M3 x 6
S32	QYSDSF2006M	SCREW	M2 x 5
S34	QYYASPR3004M	SCREW	M3 x 4
S36	QYSPSPT2030M	SCREW	M2 x 3.0
S37	QYSSSPT2050M	SCREW	M2 x 5.0
S38	SC43397-003	SCREW	
S39	QYSPSPT2050M	SCREW	M2 x 5.0
S40	QYSPSPL3004Z	SCREW	M3 x 4
S43	QYSDSP2606M	SCREW	M2.6 x 6
S58	QYSDSP2605M	SCREW	M2.6 x 5.0

■ CABINET ASSEMBLY PARTS LIST M2

M2MM□□□□

Symbol No.	Part No.	Part Name	Description
1	SC10225-001	L.SIDE COVER	(E/EC)
	SC10225-002	L.SIDE COVER	(U)
2	SC20693-002	L.SIDE PANEL	
3	SC46410-500	GASKET	
4	SC46410-480	GASKET	
5	SC10226-002	CASSETE COVER	
6	SC32177-011	WINDOW	
7	SC46321-001	ABSORB SHEET	
8	SC46321-002	ABSORB SHEET	
9	QNZ0208-001	CONNECTOR	MIC2
10	SC46246-001	MIC BRACKET	
11	PU54392-1	LABEL	(E/EC)
	SC43658-001	LABEL	(U)
12	SC10227-001	SHOLDER PAD	
13	SC20709-001	BOTTOM COVER	
14	SC46242-002	REAR BASE	
16	SC20691-001	FRONT BASE	
17	SC46243-001	BH CUSHION	
18	SCV2580-001	BATT.BRACKET	(E)
19	SC45291-001	CAP	
20	PRD44896	STAY	
21	PRD44897	STAY	
22	SC32174-002	HINGE	
23	PU49485-4	WIRE CLAMP	
24	SC45925-001	LABEL	(E/EC)
25	SC32201-001	ABSORB SHEET(L)	
26	SC32201-002	ABSORB SHEET(L)	
27	SC32201-003	ABSORB SHEET(L)	
28	SC32201-004	ABSORB SHEET(L)	
29	SC32172-001	CUSHION RUBBER	
30	SC46383-001	SHEET	
31	SC46412-001	SHIELD CUSHION	
32	SC46374-001	SHEET	
33	PRD45092-02	LABEL	
34	SC46412-002	SHIELD CUSHION	
35	—	UL LABEL	(U)
37	SSV2252	CLAMP CORE	(E/EC)
38	SC46421-001	6P PLATE	
39	QNZ0260-001	RECEPTACLE (6S)	TO SETUP-BOX
S20	QYSDSP3008M	SCREW	M3 x 8 (U/EC)
S22	SC43397-009	SCREW	
S29	QYSDSP2605Z	SCREW	M2.6 x 5
S31	QYSDSP3006M	SCREW	M3 x 6
S31	QYSDSP3006M	SCREW	M3 x 6
S42	QYSPSPD3006M	SCREW	M3 x 6
S44	QYSSSP4008N	SCREW	M4 x 8
S53	QYSPSPT2650M	SCREW	M2.6 x 5.0
S56	QYSPSPT2640N	SCREW	M2.6 x 4.0
S57	QYSPSP2606M	SCREW	M2.6 x 6

■ MIC HOLDER ASSEMBLY M9 (For DY-90EC/EC(K))

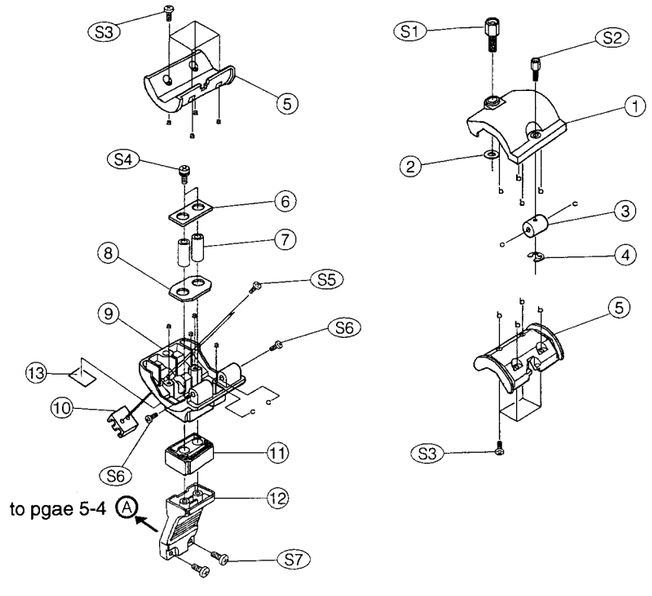

■ MIC HOLDER ASSEMBLY PART LIST M9 (Only for DY-90EC)

M9MM□□□□

Symbol No.	Part No.	Part Name	Description
1	SC20699-001	UPPER HOLDER	
2	SC45316-031	O RING	
3	SC46326-001	PIN	
4	QYREE2000	E.WASHER	
5	SC32205-001	MIC RUBBER	
6	SC46330-001	CAP PLATE	
7	SC46329-001	PIPE	
8	SC46331-001	CAP RUBBER	
9	SC20698-001	LOWER HOLDER	
10	SC42550-011	C HOLDER	
11	SC32206-001	HOLDER RUBBER	
12	SC20697-001	HOLDER BASE	
13	SC46224-021	N.PLATE/KAA90U	
S1	SC46327-001	SCREW(1)	
S2	SC46328-001	SCREW(2)	
S3	QYSDSP2006M	SCREW	M2 x 6
S4	QYSPSPL3025Z	SCREW	M3 x 25
S5	QYSDSF2005M	SCREW	M2 x 5
S6	QYSPSP2606M	SCREW	M2.6 x 6
S7	SC43390-002	SCREW	
W19	QYWSS256505N	WASHER	

5-5

5.3 CHASSIS ASSEMBLY M 3

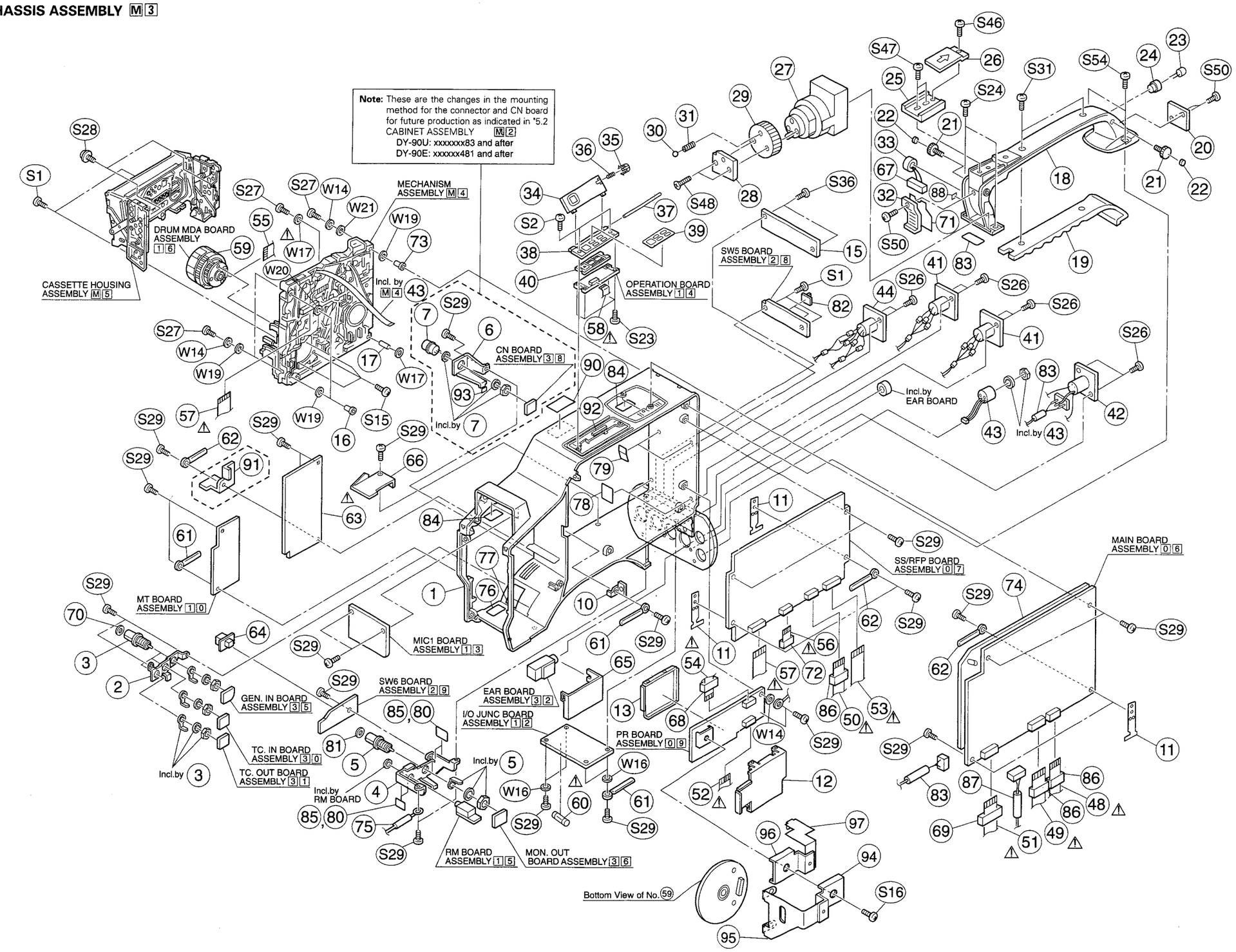

5-6

5.1 CAMERA HEAD ASSEMBLY M1

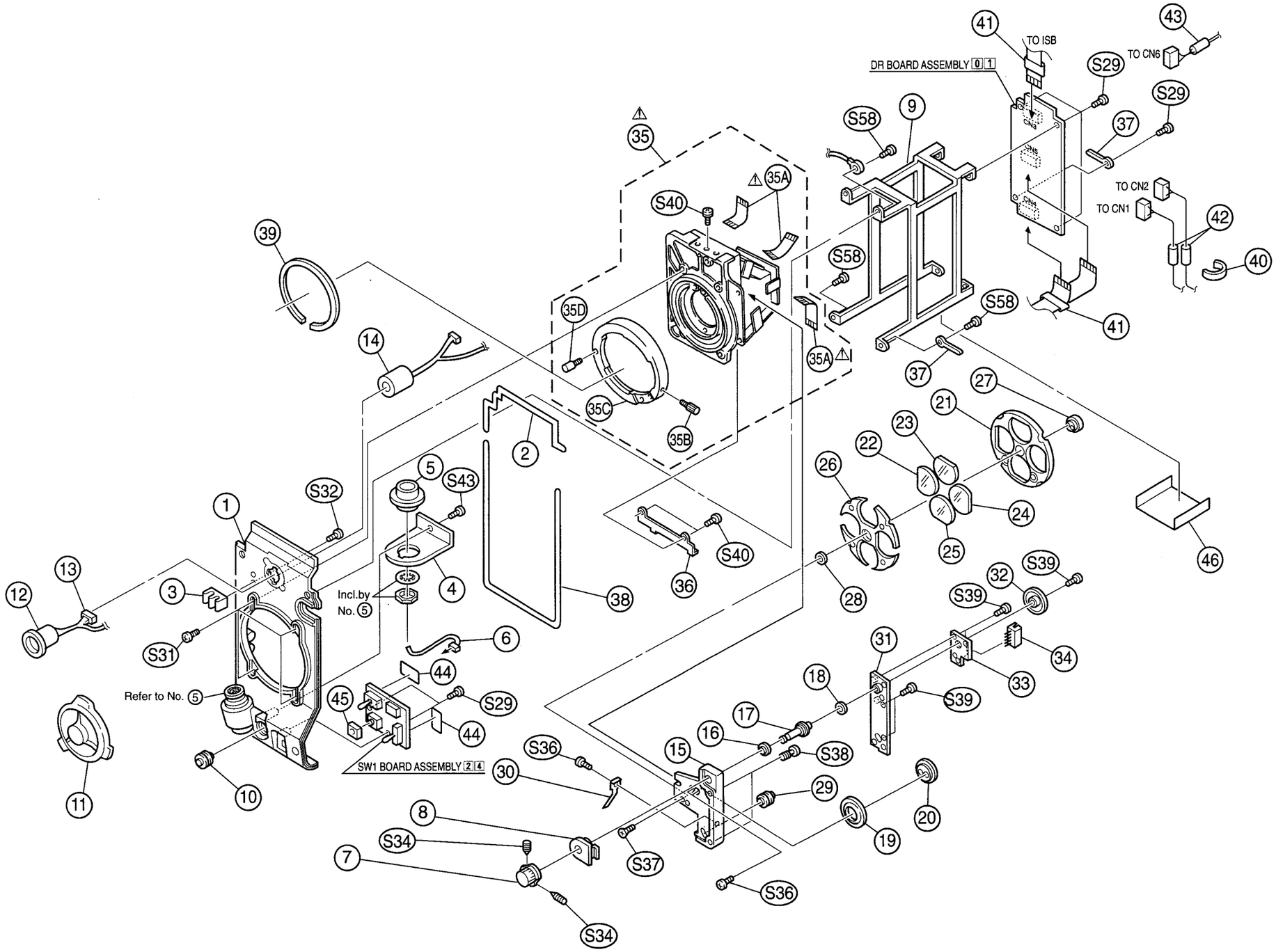

5.2 CABINET ASSEMBLY M 2

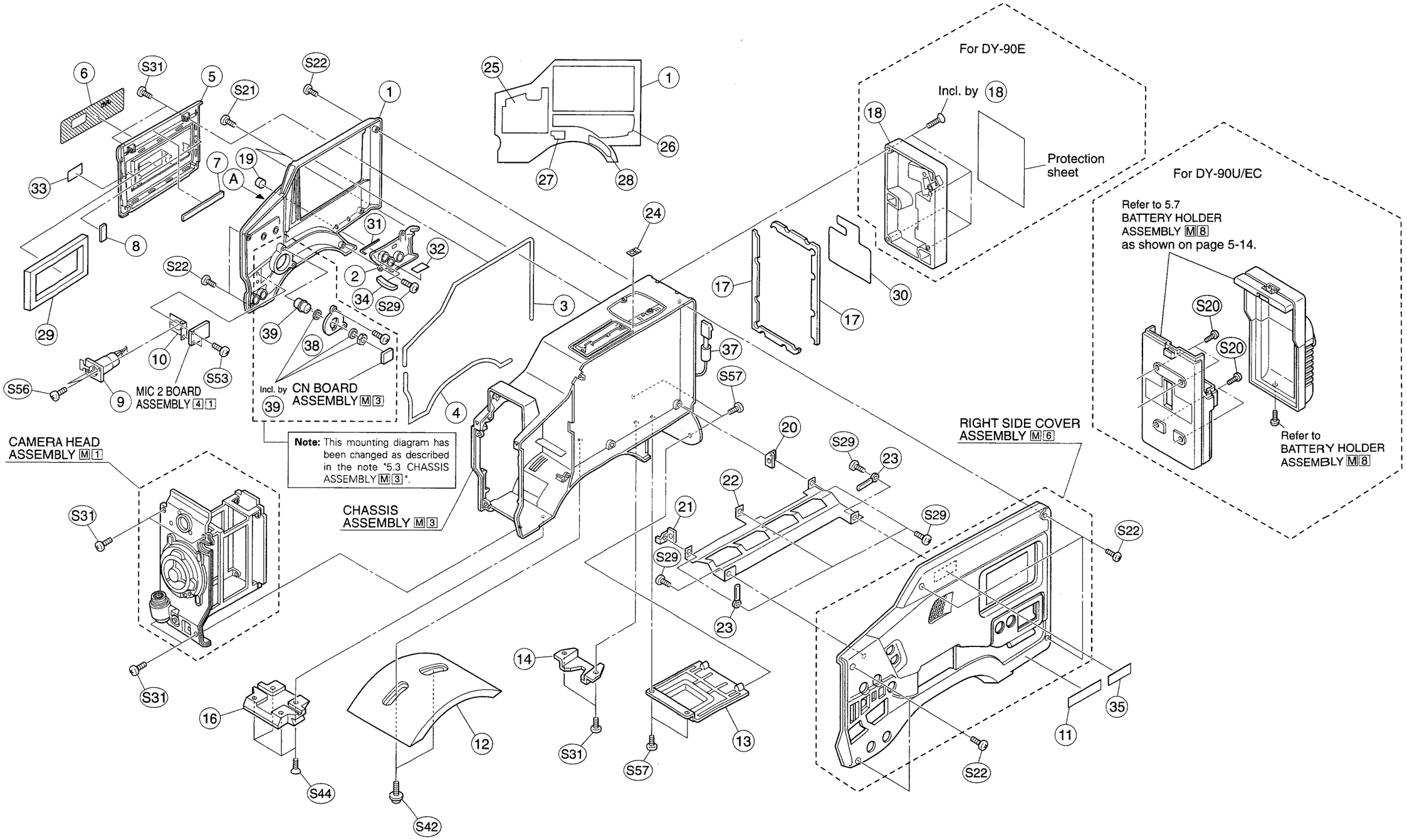

■ CHASSIS ASSEMBLY PARTS LIST M3

M3MM□□□□

Symbol No.	Part No.	Part Name	Description
1	SC10220-002	CENTER FRAME	(E/EC)
	SC10220-011	CENTER FRAME	(U)
2	SC46240-001	BNC BRACKET	
3	QNZ0187-001	BNC CONNECTOR	TC IN/OUT,GEN
4	SC32173-004	CN BRACKET	
5	QNZ0187-001	BNC CONNECTOR	MONITOR OUT
6	SC46245-002	6P BRACKET	
7	QNZ0260-001	RECEPTACLE(6S)	TO SETUP-BOX
10	PRD44897	STAY	
11	PRD44893	HOLDER	
12	SC32175-001	P/R SHIELD(A)	
13	SC32176-001	P/R SHIELD(B)	
15	SC46239-002	REAR N.PLATE	
16	SC46324-002	COLLAR	
17	PRD45133	COLLAR(2) ASSEMBLY	
18	SC10228-001	HANDLE	
19	SC20692-001	HANDLE COVER	
20	SC46244-001	CN COVER	
21	SC46310-001	PIN	
22	SC46311-001	SPACER	
23	SLR-56VR5F	L.E.D.	
24	SM3512	L.E.D.MOUNT	
25	SC40886-001	SHOU	
26	C40936	SPRING	
27	SC32163-002	VF BASE	
28	SC46227-002	SLIDE PLATE	
29	SC45127-002	VF RING	
30	SC40465-045	STEEL BALL	
31	SC46371-001	SPRING	
32	SC46235-002	ADJUST PLATE	
33	SCV0238-06S	CONNECTOR	
34	PRD31229-01-03	DOOR	
35	PRD43840-01-04	KNOB(DOOR)	
36	PRD30023-53	COMP.SPRING 53	
37	PRD43829-03	SHAFT	
38	PRD31228-01-04	HOLDER(OPE)	
39	PRD44890-01-01	PLATE	
40	PRD31233	KNOB(OPE)	
41	QNZ0207-001	RECEPTACLE(3S)	AUD1/AUD2 IN
42	QNZ0249-001	DC IN CONN(4P)	
43	QNZ0257-001	DC OUT CONN(4S)	
44	QNZ0220-001	RECEPTACLE(5P)	
45	SCV2631-001	FERRITE CORE	
⚠ 48	PGW0206-140140	FFC WIRE	<ALCD TO MAIN> CN44
⚠ 49	PGW0206-140180	FFC WIRE	<ALCD TO MAIN> CN43
⚠ 50	PGW0206-200120	FFC WIRE	<ALCD TO SS> CN55
⚠ 51	PGW0206-140240	FFC WIRE	<CP TO MAIN> CN32
⚠ 52	SCV2803-2806B	FFC WIRE	<MAIN TO PR> CN56
⚠ 53	SCV2803-4011B	FFC WIRE	<MAIN TO SS> CN46
⚠ 54	SCV2803-1404B	FFC WIRE	<PR TO SS> CN54
⚠ 55	SCV2803-1804B	FFC WIRE	<PR TO L.DRUM>
⚠ 56	SCV2337-1017BD	FFC WIRE	<SS TO D.MDA>CN53
⚠ 57	SCV2803-4011B	FFC WIRE	<SS TO MIF>CN47
⚠ 58	PGW0206-070080	FFC WIRE	<OPE TO MIF>
⚠ 59	PDR2030A	DRUM FINAL ASSEMBLY	
⚠ 60	QMF51A2-4R0-S	FUSE	4A,AC250V(E/EC)
⚠ 60	QMF51U1-4R0-S	FUSE	4A,AC125V (U)
61	PU49485-4	WIRE CLAMP	
62	PU49485-3	WIRE CLAMP	
⚠ 63	SCV2823-00B	PS BOARD ASSEMBLY	
63A	SCV2908-001	CONNECTOR	
64	SC44556-011	TC.KNOB	
65	SC46333-001	SHEET	
66	SC46332-001	WIRE CLAMP	
67	MLSC0692-001	WIRE KIT	
68	QQR0717-032	FERRITE CORE	
69	QQR0895-011	FPC CORE	
70	SC46380-001	BNC CUSHION	
71	SC46237-001	SHEET	
72	QQR0947-001	FERRITE CORE	
73	SC46324-001	COLLAR	
74	SC32229-001	SHIELD PLATE	
75	PGZ02359	FERRITE BEADS	
76	SC46419-001	SHEET	
77	SC46419-002	SHEET	
78	SC46074-004	BKT SHEET	
79	SC45563-003	SHEET	
80	SC45548-002	SHEET	
81	SC46380-002	BNC CUSHION	
82	SC44556-002	KNOB	
83	QQR0490-001	FILTER	
84	SC46074-004	BKT SHEET	
85	QQR0988-002	FERITE CORE	
86	QQR0895-008	FPC CORE	
87	SCV2728-001	CLAMP FILTER	
88	SC46423-001	LABEL	(U)
89	QQR0765-001	FERRITE CORE	
91	SC46417-001	BRACKET	
92	SC46158-003	SHEET	
93	SC46158-002	SHEET	
94	SC46442-001	SHIELD BRACKET (3)	
95	SC46438-001	SHIELD PLATE (1)	
96	SC46441-001	SHIELD BRACKET (2)	
97	SC46439-001	SHIELD PLATE (2)	
S1	QYSDSP2004Z	SCREW	M2 x 4
S2	QYSDSP2006M	SCREW	M2 x 6
S15	QYSDSP2606Z	SCREW	M2.6 x 6
S16	QYSDSP3004Z	SCREW	M3 x 4
S23	QYSDSF2004Z	SCREW	M2 x 4
S24	QYSDSP4006M	SCREW	M4 x 6
S26	QYSPSP2606N	SCREW	M2.6 x 6
S27	QYSDSP2612Z	SCREW	M2.6 x 12
S28	QYSPSPD2005Z	SCREW	M2 x 5
S29	QYSDSP2605Z	SCREW	M2.6 x 5
S31	QYSDSP3006M	SCREW	M3 x 6
S36	QYSPSPT2030M	SCREW	M2 x 3.0
S46	SC44821-001	SCREW	
S47	QYSSSP3006N	SCREW	M3 x 6
S48	QYSSSP4045N	SCREW	M4 x 45
S50	QYSDSP2004M	SCREW	M2 x 4
S54	QYSDSP4010M	SCREW	M4 x 10
W14	PRD30029-10	WASHER	
W16	QYWBS285803N	T.LOCK WASHER	CV
W17	PRD30084-09	WASHER	
W19	SC46325-001	ABSORB SPACER	
W20	SC46325-002	ABSORB SPACER	
W21	SC46325-011	ABSORB SPACER	

5-7

5.4 MECHANISM ASSEMBLY M 4

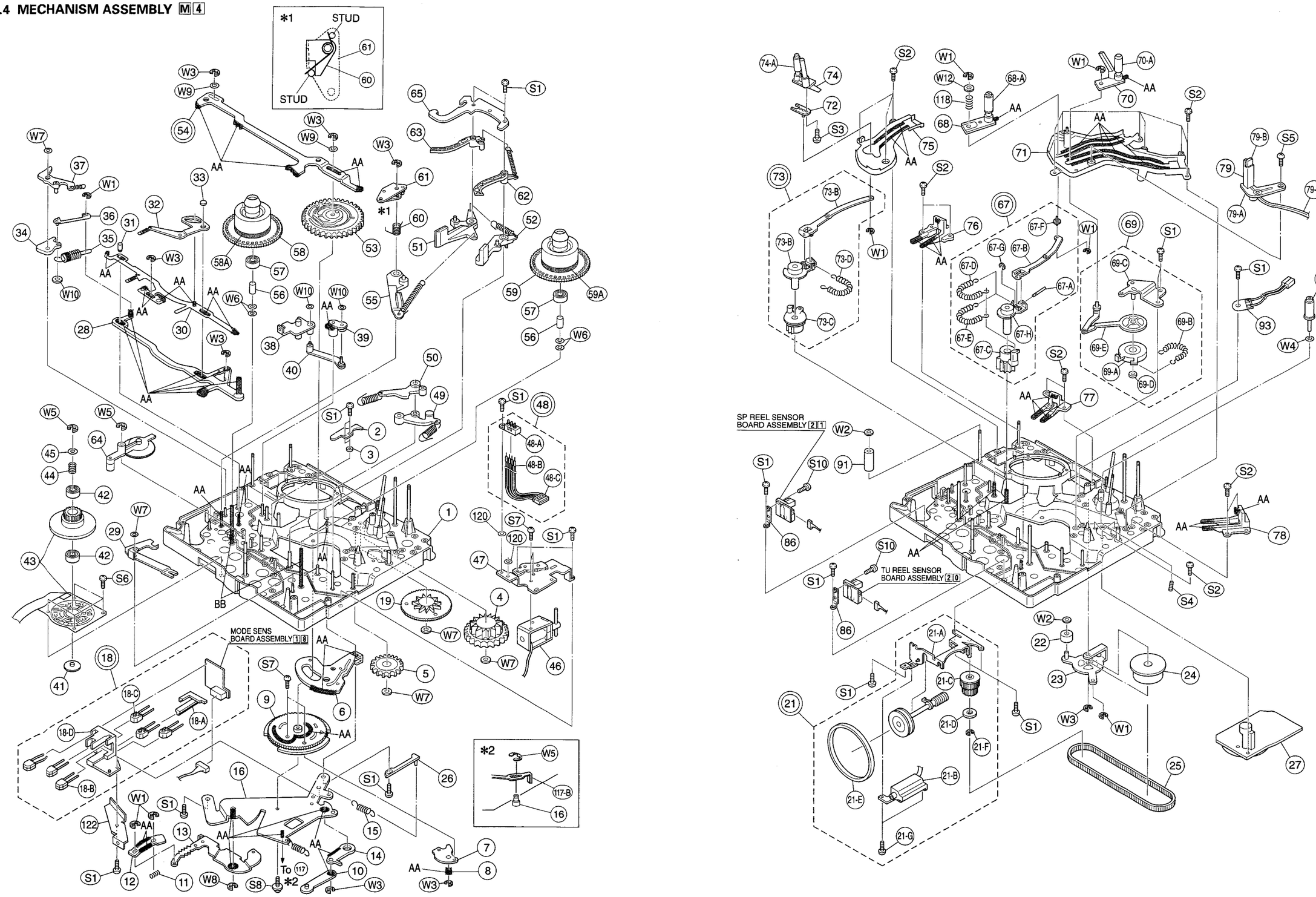

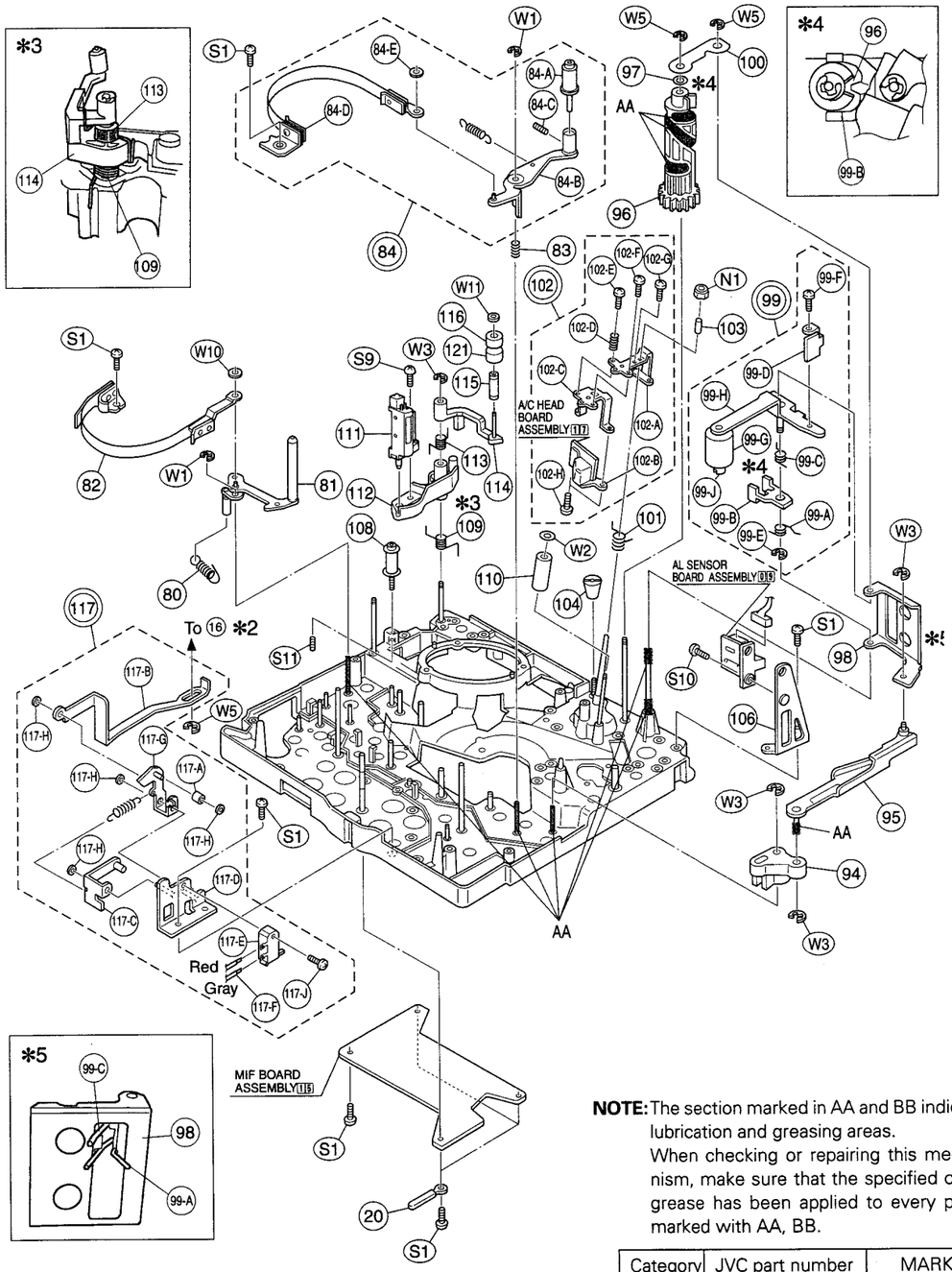

NOTE: The section marked in AA and BB indicate lubrication and greasing areas.
When checking or repairing this mechanism, make sure that the specified oil or grease has been applied to every point marked with AA, BB.

Category	JVC part number	MARK
Grease	MOS2-C	AA
Oil	COSMO-HV56	BB

■ MECHANISM ASSEMBLY PARTS LIST M4

M4MM□□□□

Symbol No.	Part No.	Part Name	Description
	PGS30280B	MECHANISM ASSEMBLY	
1	PRD10339A-07	MAIN DECK ASSEMBLY	
2	PRD44995	ADJUST PLATE	
3	PRD44141	SPACER	
4	PRD44573	P.I.GEAR	
5	PRD44574	C.I.GEAR	
6	PRD44578A	ARM GEAR(R) ASSEMBLY	
7	PRD44862A	PIN PLATE ASSEMBLY	
8	PRD44865	ROLLER	
9	PRD20538-01-02	COTROL CAM	
10	PRD44713A	ROD	
11	PRD30023-56	COMP.SPRING 56	
12	PRD31117-01-03	SLIDE GEAR	
13	PRD44582A-04	A.GEAR(L) ASSEMBLY	
14	PRD44796A-01	P.C.ARM ASSEMBLY	
15	PRD44838	TENSION SPRING	
16	PRD44958A	CAM BRACKET ASSEMBLY	
18	PGS30258A	M.SENSOR ASSEMBLY	
18A	PRD31207	MODE SENSOR(2)	
18B	TLN117	L.E.D.	
18C	TPS622	TRANSISTOR	
18D	PRD20539	MODE SENSOR(1)	
19	PRD44572	CONNECT GEAR	
20	PU49485-3	WIRE CLAMP	
21	PGZ02533-02	L.MOTOR ASSEMBLY	
21A	PRD44560A-01	GEAR BKT.ASSEMBLY	
21B	JV-1850	LOADING MOTOR	
21C	PRD44566	WORM WHEEL	
21D	PQM30018-54	SPACER	
21E	PRD45169	BELT	
21F	QYREE2000	E.WASHER	
21G	QYSPSPL2003Z	SCREW	M2 x 3
21G	QYSPSPL2003Z	SCREW	M2 x 3
22	PRD44571	BAND ROLLER	
23	PRD44568A	B.R.ARM ASSEMBLY	
24	PRD44567	TIMING GEAR	
25	PGZ02193	TIMING BELT	
26	PRD44839A	ADJ.LEVER ASSEMBLY	
27	PGZ02191	CAPSTAN MOTOR	
28	PRD44597A-01	S.PLATE ASSEMBLY	
29	PRD31124	SOLENOID LEVER	
30	PRD44955A-01	BRAKE PLATE ASSEMBLY	
31	PRD44832	COLLAR 1	
32	PRD44956A	BRAKE ANGLE ASSEMBLY	
33	PRD44833	COLLAR 2	
34	PRD44616	S.ADD LEVER	
35	PRD44847-01-01	TENSION SPRING	
36	PRD44815A-01	T.ROD ASSEMBLY	
37	PRD44961A	S.B.LEVER ASSEMBLY	
38	PRD44618A-01	SUB ARM SUB ASSEMBLY	
39	PRD31128	GENEVA GEAR	
40	PRD44627A	PUSH ARM ASSEMBLY	
41	PRD44764	COLLAR	
42	PRD30021-14	BALL BEARING	
43	PGZ02192	REEL MOTOR	
44	PRD30023-57	COMP.SPRING 57	
45	QYWFM315413	PLASTIC WASHER	
46	PGZ02194	SOLENOID ASSEMBLY	
47	PRD31125	SOLENOID RACKET	
48	PGS30299B	W SENSOR ASSEMBLY	
48A	PGZ02453	W SENSOR	
48B	QXTE154-010	TUBE	
48C	MLSL066B	CAS.SW WIRE	
49	PRD44959A-02	T.S.L.SP.ASSEMBLY	
50	PRD44953A	T.B.LEVER ASSEMBLY	
51	PRD45006A	L.C.L.F ASSEMBLY	
52	PRD45007A	R.C.L.F ASSEMBLY	
53	PRD20540	2ND CAM	
54	PRD44614A-01	DIR.PLATE ASSEMBLY	
55	PRD44835A-02	SUB BREKE ASSEMBLY	

Symbol No.	Part No.	Part Name	Description
56	PRD44786	COLLAR	
57	PRD30021-13	BALL BEARING	
58	PRD44518A	REEL DISK ASSEMBLY	SUPPLY
58A	PRD44711	RUBBER TIRE	
59	PRD44518B	REEL DISK ASSEMBLY	TAKE UP
59A	PRD44711	RUBBER TIRE	
60	PRD44834	TORSION SPRING	
61	PRD44635A	BAND HOLDER BKT	
62	PRD44954A-01	T.B.A.SP.ASSEMBLY	
63	PRD31131A-02	S.B.ARM ASSEMBLY	
64	PGS30248A	IDLER ASSEMBLY	
65	PRD31133-01-01	ARM GUIDE	
67	PGS30251A	L.ARM(R) ASSEMBLY	
67A	PRD44537	L.ARM SHAFT	
67B	PRD44545A	ARM(R) ASSEMBLY	
67C	PRD31109	L.GEAR(R)	
67D	PRD44542-02	TENSION SPRING	
67E	PRD44542-03	TENSION SPRING	
67F	PRD44550	STUD	
67G	QYREE1200	WASHER	
67H	PRD44543A	L.ARM(R1) ASSEMBLY	
68	PRD31173C	P.BASE(T) ASSEMBLY	
68A	PRD45090A-01	G.ROLLER ASSEMBLY	
69	PGS30252A	ARM(D) ASSEMBLY	
69A	PRD44558	GEAR	
69B	PRD30024-74	TENSION SPRING	
69C	PRD44471A-01	ARM(D) BRACKET	
69D	PQM30017-5	WASHER	
69E	PRD44551A	ARM(D1) ASSEMBLY	
70	PRD31174A	P.BASE(D) ASSEMBLY	
70A	PRD44950A	G.ROLLER ASSEMBLY	
71	PRD10342-01-03	GUIDE RAIL(T)	
72	PRD44477A	BASE ASSEMBLY	
73	PGS30250A-01	L.ARM(L) ASSEMBLY	
73B	PRD45128A	L.ARM(L) ASSEMBLY	
73C	PRD31108A	LOADING GEAR(L)	
73D	PRD44542	TENSION SPRING	
74	PRD31172B-04	P.BASE(S) ASSEMBLY	
74A	PRD45090A-01	G.ROLLER ASSEMBLY	
75	PRD10341-01-03	GUIDE RAIL(S)	
76	PRD31093	CATCHER(S)	
77	PRD31094	CATCHER(T)	
78	PRD31095	CATCHER(D)	
79	PGS30245A	CASS.LED.ASSEMBLY	
79A	PRD31104	LED HOLDER	
79B	LN59	L.E.D.	
79C	MLSL045A	CASS.LED WIRE	
80	PRD30024-83	TENSION SPRING	
81	PRD45022A-01	S.T.ARM ASSEMBLY	
82	PRD44722A-02	TENSION BAND(S)	
83	PRD30023-59	COMP.SPRING 59	
84	PGS30257A	T.T.ARM ASSEMBLY	
84A	PRD43631A	GUIDE ROLLER	
84B	PRD44952A-01	T.T.ARM ASSEMBLY	
84C	QYYASPF2605F	SCREW	M2.6 x 5
84D	PRD44726A-01	TENSION BAND(T)	
84E	PQM30017	SLIT WASHER	
86	PRD44521	SENSOR BRACKET	
91	PRD44505	GUIDE ROLLER	
92	PRD44403B	GUIDE ROLLER	
93	QSD0002-001	DEW SENSOR	
94	PRD44600	JOINT ARM	
95	PRD44603A-01	PINCH ROD ASSEMBLY	
96	PRD20537	CAM GEAR	
97	QYWFM315450	PLASTIC WASHER	
98	PRD31221-01-01	P.LOCK LEVER	
99	PGS30255A-01	P.ROLLER ASSEMBLY	
99A	PRD45001	TORSION SPRING	
99B	PRD31148	ARM LIFTER	
99C	PRD45000	TORSION SPRING	

Symbol No.	Part No.	Part Name	Description
99D	PRD44744-01-01	SENSOR PLATE	
99E	QYREE4000	E WASHER	
99F	QYSDSP2004Z	SCREW	M2 x 4
99G	PRD44991A	PINCH ROLLER	
99H	PRD44720A-05	PINCH ARM ASSEMBLY	
99J	PQ43566	P.ROLLER CAP	
100	PRD44729	PLATE	
101	PRD44501-01-01	TORSION SPRING	
102	PGS30247A	A/C HEAD ASSEMBLY	
102A	PRD31101	A/C HEAD ARM	
102B	PGZ02190-01-02	A/C HEAD	
102C	PRD44502A-02	HEAD BASE ASSEMBLY	
102D	PQM30002-197	COMP.SPRING 197	
102E	QYSDSP2612Z	SCREW	M2.6 x 12
102F	PQ43687B	SCREW	M2.6 x 8
102G	PQ44621	SCREW	
102H	QYSDSP2604Z	SCREW	M2.6 x 4
103	PRD30026-38	COLLAR	
104	PRD44241	TAPER NUT	
106	PRD31156	SENSOR BRACKET	
108	PRD44926A	G.ROLLER ASSEMBLY	
109	PRD44498-01-01	TORSION SPRING	
110	PRD44505	GUIDE ROLLER	
111	PRD44399A	FE HEAD ASSEMBLY	
112	PRD31099A-03	FE HEAD ARM	
113	PRD44790-01-01	TORSION SPRING	
114	PRD45102A	H.C.ARM ASSEMBLY	
115	PQ46418-1-2	CLEANER ROLLER	
116	PRD45003	CLEANER 1	
117	PGS30254A	LOCK UNIT ASSEMBLY	
117A	PRD44590	ROLLER	
117B	PRD44586-01-01	EJECT ROD	
117C	PRD44591A-02	LOCK LEVER ASSEMBLY	
117D	PRD44594A	LOCK BKT.ASSEMBLY	
117E	QSW0097-001	INSERT SWITCH	
117F	MLSL044A-01	CAS.LOCK WIRE	
117G	PRD45005A	NOSE.F.ASSEMBLY	
117H	PQM30017-25	SLIT WASHER	
117J	QYSDSP2006M	SCREW	M2 x 6
118	PRD30023-42	COMP.SPRING 42	
120	PRD44141	SPACER	
121	PRD45017	CLEANER 2	
122	SC46440-001	SHIELD BRACKET (1)	
N1	PQ40353	NUT	
S1	QYSDSP2004Z	SCREW	M2 x 4
S2	QYSDSP2006M	SCREW	M2 x 6
S3	QYSPSPU1740M	SCREW	M1.7 x 40
S4	QYYASPF2603F	SCREW	M2.6 x 3
S5	QYSBSF2606Z	SCREW	M2.6 x 6
S6	QYSPSP2004Z	SCREW	M2 x 4
S7	QYSPSPL2003Z	SCREW	M2 x 3
S8	QYSPSPD2006Z	SCREW	M2 x 6
S9	SBSF2610Z	SCREW	M6 x 10
S10	QYSPSPL3006Z	SCREW	M3 x 6
S11	PRD45104	SCREW	
W1	QYREE1500	E.WASHER	
W2	PQM30017-25	SLIT WASHER	
W3	QYREE2000	E.WASHER	
W4	PRD43925	RING	
W5	QYREE2500	E WASHER	
W6	PQM30018-33	WASHER	
W7	PQM30017-22	WASHER	
W8	QYREE4000	E WASHER	
W9	QYWFM264725	PLASTIC WASHER	
W10	PQM30017	SLIT WASHER	
W12	QYWFM214013	PLASTIC WASHER	

5-10

5.5 CASSETTE HOUSING ASSEMBLY M5

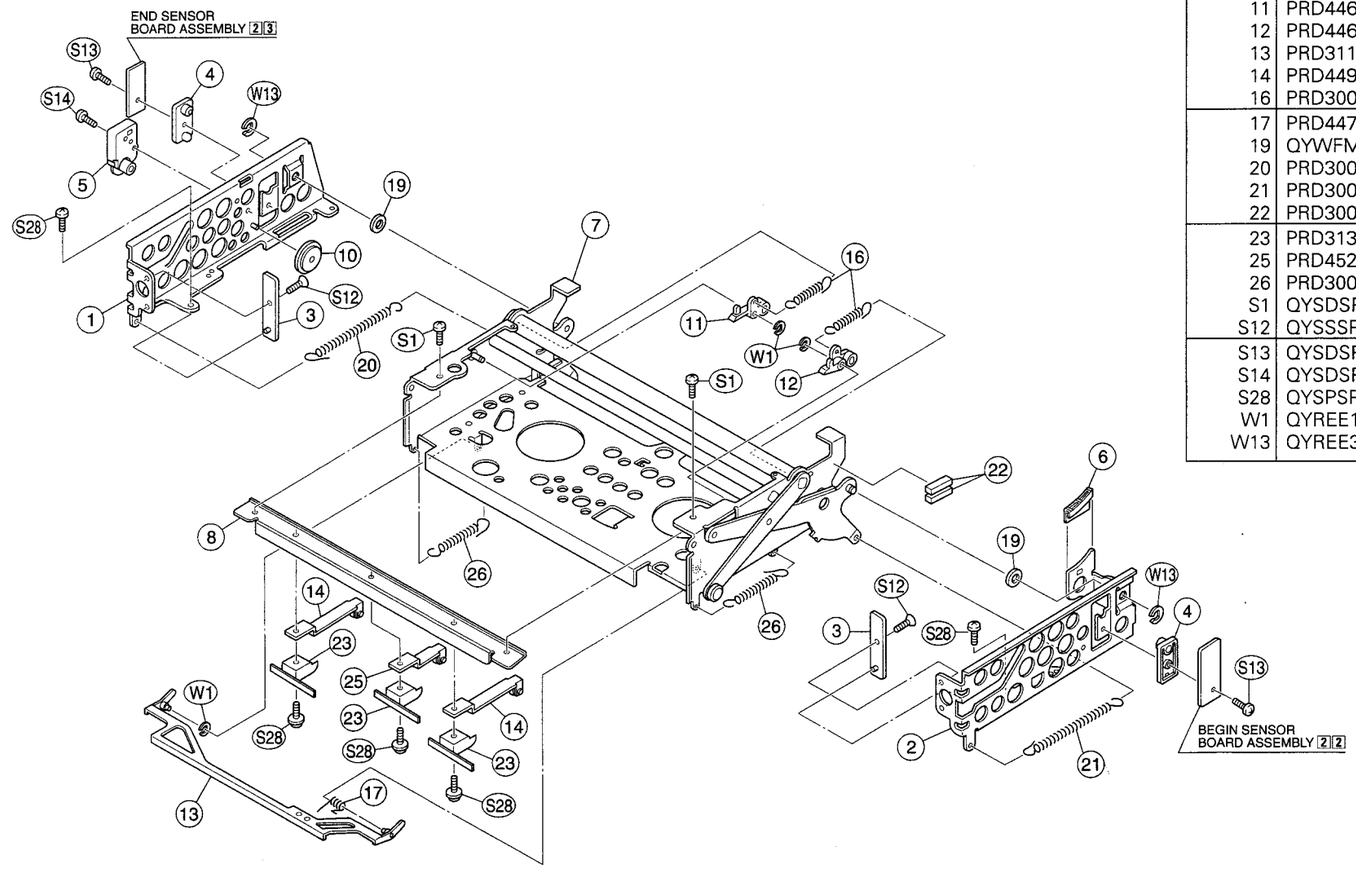

■ CASSETTE HOUSING ASSEMBLY PARTS LIST M5

M5MM□□□□

Symbol No.	Part No.	Part Name	Description
	PGS30329B-01	C.HOUSING ASSEMBLY	
1	PRD44690A	BRACKET(L) ASSEMBLY	
2	PRD44695A-02	BRACKET(R) ASSEMBLY	
3	PRD44694-01-01	CASSETTE GUIDE	
4	PRD44704	SENSOR BRACKET	
5	PU56781	DAMPER	
6	PQ42384-1-3	LID GUIDE	
7	PRD31135A-03	C.HOUSING ASSEMBLY	
8	PRD31274-01-02	TOP PLATE	
10	PRD44696	DAMPER GEAR	
11	PRD44697	HOLD LEVER(L)	
12	PRD44698	HOLD LEVER(R)	
13	PRD31139A	L.LEVER ASSEMBLY	
14	PRD44986A	SPRING PLATE	
16	PRD30024-70-12	TENSION SPRING	
17	PRD44702	TORSION SPRING	
19	QYWFM416550	PLASTIC WASHER	
20	PRD30024-72	TENSION SPRING	
21	PRD30024-95	TENSION SPRING	
22	PRD30030-162	PAD	
23	PRD31343	C.GUIDE 2	
25	PRD45217A	S.PLATE 2 ASSEMBLY	
26	PRD30024-103	TENSION SPRING	
S1	QYSDSP2004Z	SCREW	M2 x 4
S12	QYSSSP2004M	SCREW	M2 x 4
S13	QYSDSP2008Z	SCREW	M2 x 8
S14	QYSDSP2006Z	SCREW	M2 x 6
S28	QYSPSPD2005Z	SCREW	M2 x 5
W1	QYREE1500	E.RING	
W13	QYREE3000	E.RING	

5-11

5.6 RIGHT SIDE COVER ASSEMBLY M6

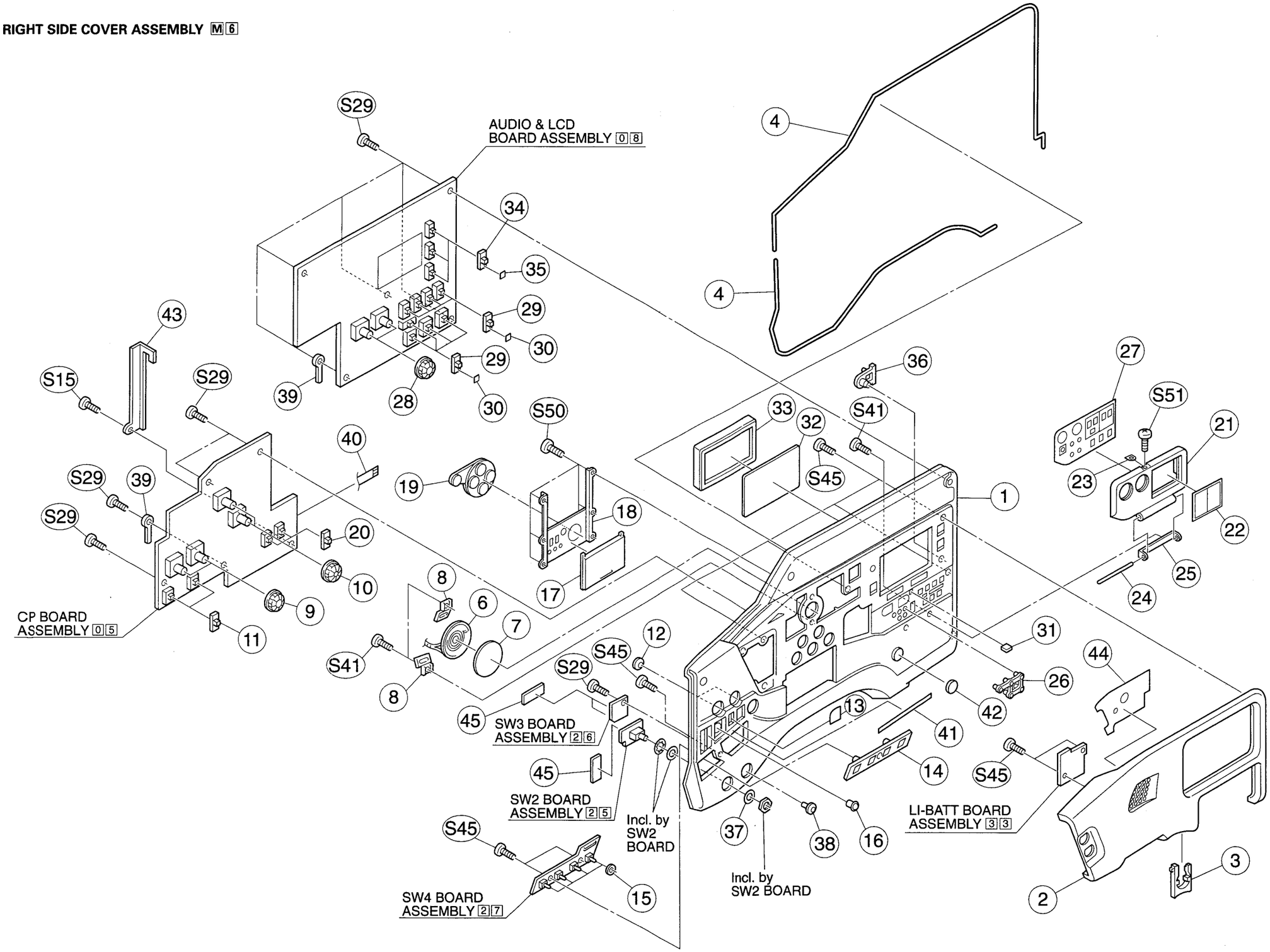

5-12

■ RIGHT SIDE COVER ASSEMBLY PARTS LIST M6

M6MM□□□□

Symbol No.	Part No.	Part Name	Description
1	SC10223-001	R.SIDE COVER	(E/EC)
	SC10223-002	R. SIDE COVER	(U)
2	SC10224-001	CHEEK PAD	
3	SC32169-001	BATTERY HOLDER	
4	SC46410-500	GASKET	
6	SCV2903-001	SPEAKER	
7	SC46228-001	SHEET	
8	SC44537-001	SP BRACKET	
9	PRD44876-01-02	VR KNOB(2)	
10	SC46226-001	VR KNOB	
11	SC44556-002	KNOB	
12	SC45246-001	KNOB	
13	SC46399-001	LABEL	
14	SC31491-004	SW.NAME PLATE	
15	SC45264-001	RUBBER	
16	SC43451-001	LED LENS	
17	SC32166-001	SLIDE COVER	
18	SC32167-001	OPERATION PLATE	(E/EC)
	SC32167-002	OPERATION PLATE	(U)
19	SC32168-001	OPERATION CAP	
20	SC43403-001	KNOB	
21	SC20690-002	PANEL COVER	(E/EC)
	SC20690-003	PANEL COVER	(U)
22	SC46229-001	PANEL WINDOW	
23	SC46230-002	PANEL PLATE	
24	SC46231-001	PANEL SHAFT	
25	SC46232-001	SHAFT HOLDER	
26	SC46233-001	PANEL KNOB	
27	SC32170-002	AUDIO PANEL	(E/EC)
	SC32170-003	AUDIO PANEL	(U)
28	SC32171-001	VOLUME KNOB	
29	PRD43835	KNOB(OPE)	
30	PRD42909-04	KNOB PLATE	
31	SC46208-002	MAGNET	
32	SC46400-001	PLATE(LCD)	
33	SC46236-002	LCD CUSHION	
34	SC45116-001	KNOB	
35	SC46397-001	KNOB PLATE	
36	SC46238-001	SELECT KNOB	
37	QYWWS629205Z	WASHER	
38	SC44828-002	SWITCH CAP	
39	PU49485-4	WIRE CLAMP	
⚠ 40	PGW0206-040100	FFC WIRE	<ALCD TO CP>
41	SC46344-002	NAME PLATE	
42	SC46357-001	CUSHION	
43	SC46334-001	CP BRACKET	
44	SC32202-001	ABSORB SHEET(R)	
45	PRD30030-162	PAD	
S15	QYSDSP2606Z	SCREW	M2.6 x 6
S29	QYSDSP2605Z	SCREW	M2.6 x 5
S41	QYSDSP2604M	SCREW	M2.6 x 4
S45	QYSDSF2606Z	SCREW	M2.6 x 6
S50	QYSDSP2004M	SCREW	M2 x 4
S51	QYSPSPT2025M	SCREW	M2 x 2.5

5.7 BATTERY HOLDER ASSEMBLY M8 (For DY-90U/EC/EC(K))

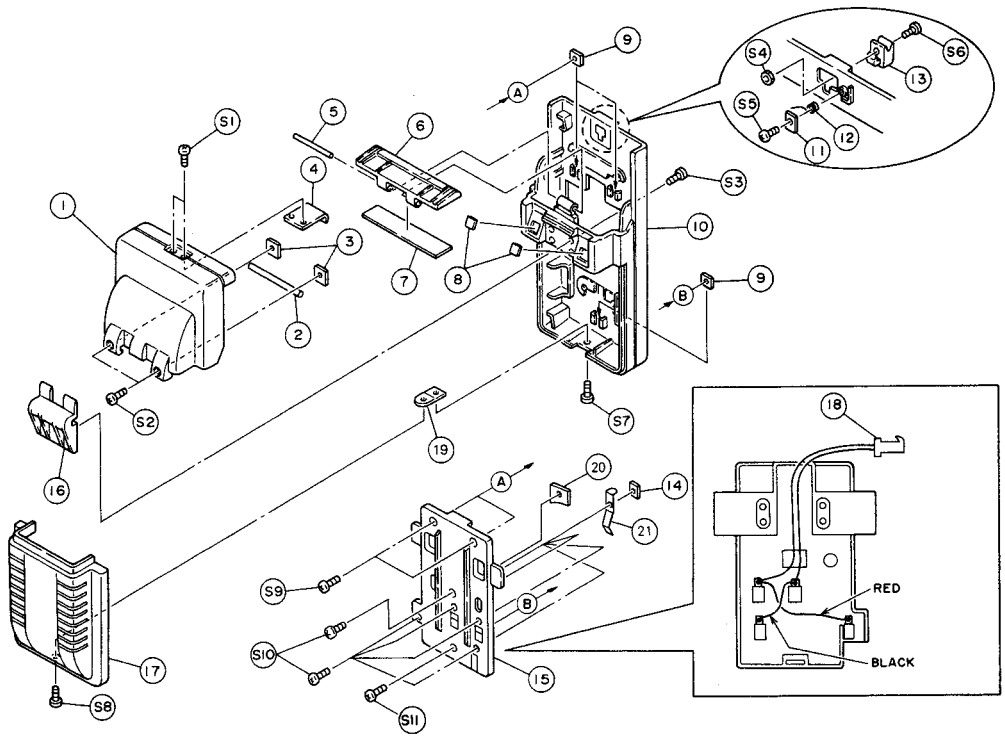

■ BATTERY HOLDER ASSEMBLY PART LIST M9 (For DY-90U/EC/EC(K))

M8MM□□□□

Symbol No.	Part No.	Part Name	Description
1	SC20476-011	B.H.COVER(1)	
2	SC45154-001	SHAFT	
3	PRD30955-02	PLATE	
4	PRD30955-05	ADJUST PLATE	
5	SC44805-001	SHAFT	
6	SC31319-011	GUIDE	
7	SC44869-006	CUSHION	
8	SC45155-001	CUSHION	
9	SC44899-002	NUT	
10	SC10156-011	BAT.HOLDER BASE	
11	SC43571-002	BRACKET	
12	SC43568-001	SPRING	
13	SC43570-001	LOCK KNOB	
14	SC44886-001	PLATE	
15	SC20478-004	TERMINAL COVER	
16	SC31501-011	SHAFT HOLDER	
17	SC20477-011	B.H.COVER(2)	
18	MLSC0570-003	WIRE ASSEMBLY	
19	SC45152-001	NUT.PLATE	
20	PRD30955-04	ADJUST PLATE	
21	SC45150-002	PLATE	
S1	QYSPSPT2650M	SCREW	M2.6 x 5.0
S2	QYSSSP2606M	SCREW	M2.6 x 6
S3	QYSDSP2605M	SCREW	M2.6 x 5
S4	QYNNS2000N	NUT	
S5	QYSDSF2005M	SCREW	M2 x 5
S6	QYSDSP2006M	SCREW	M2 x 6
S7	QYSDSP3004N	SCREW	M3 x 4
S8	QYSDSP3005M	SCREW	M3 x 5
S9	QYSSSP3005M	SCREW	M3 x 5
S10	QYSSSPT2040M	SCREW	M2 x 4.0

SECTION 6
ELECTRICAL PARTS LIST

SAFETY PRECAUTION:
Parts identified by the ⚠ symbol are critical for safety. Replace only with specified parts numbers.
For maximum reliability and performance, all other replacement parts should be identical to those specified.

NOTE:
- Parts not denoted by parts numbers are not supplied by JVC.
- Abbreviations in this list are as follows:

RESISTORS
In the "Description" column:
All resistance values are in ohms (Ω).
k expresses kilo-ohm (1 000 ohms, kΩ).
M expresses mega-ohm (10^6 ohms, MΩ).

In the "Parts Name"column:
CAR.RESISTOR : Carbon Resistor
C.M.F.RESISTOR : Constant Metalized Film Resistor
COMP.RESISTOR: Composition Resistor
FUSI.RESISTOR : Fusible Resistor
M.F.RESISTOR : Metal Film Resistor
M.G.RESISTOR : Metal Graze Resistor
M.P.RESISTOR : Metal Plate Resistor
O.M.F.RESISTOR : Oxide Metalized Film Resistor
TRIM.RESISTOR : Trimerer Resistor
U.F.RESISTOR : Non-inflammable Resistor
VAL.RESISTOR : Valiable Resistor
W.W.RESISTOR : Wire Wound Resistor

CAPACITORS
In the "Description" column:
All capacitance values are in microfarad (μF) unless otherwise indicated.
p expresses picofarad (10^{-12} farad,pF).

In the "Parts Name" column:
CER.CAPACITOR : Ceramic Capacitor
E.CAPACITOR : Electrolytic Capacitor
FILM CAPACITOR : Film Capacitor
M.F.CAPACITOR : Metalized Film Capacitor
MICA CAPACITOR : Mica Capacitor
MPP CAPACITOR : Metalized PolyPropylene Capacitor
MPPS CAPACITOR : Metalized PolyPhenylene Sulfied film Capacitor
M.M.CAPACITOR : Metalized Mylar Capacitor
MYLAR CAPACITOR : Mylar Capacitor
N.P.CAPACITOR : Non-Poler electrolytic Capacitor
P.P.CAPACITOR : PolyPropylene Capacitor
PPS CAPACITOR : PolyPhenylene Sulfied film Capacitor
P.S.CAPACITOR : PolyStyrene Capacitor
TAN.CAPACITOR : Tantal Capacitor
TRIM.CAPACITOR : Trimer Capacitor
VAL.CAPACITOR : Valiable Capacitor

Note: In the "Description" column of the parts list, (U) means the parts for the U version while (E) is for the E version.

Symbol No.	Part No.	Part Name	Description	
IC1	SCV1585-064	I.C.(M)	JVC (U)	← for U version
	SCV1585-067	I.C.(M)	JVC (E)	← for E version

6.1 DR BOARD ASSEMBLY PARTS LIST [0][1]

SCK2524-01-U0A(U)

SCK2524-01-P0A(E) [0][1]□□□□□□□

Symbol No.	Part No.	Part Name	Description
IC1	UPD9438BGK-BE9	I.C.(M)	NEC
IC2	JCS0028	I.C.(M)	JVC
IC3	TC74HC04AF-X	I.C.(M)	TOSHIBA
IC4	UPC78L05T-X	I.C.(M)	NEC
IC5	TC74VHC08FT-X	I.C.(M)	TOSHIBA
IC6	TC7SH86FU-X	I.C.(M)	TOSHIBA
IC7	TC7SH32FU-X	I.C.(M)	TOSHIBA
IC8	TC7S04F-X	I.C.(M)	TOSHIBA
IC9	TC7SH32FU-X	I.C.(M)	TOSHIBA
IC10	TLC2932IPW	I.C.(M)	TEXAS
IC11	TC7S08F-X	I.C.(M)	TOSHIBA
IC12	MB88345PF	I.C.(M)	FUJITSU
IC14	TC4S11F-X	I.C.(M)	TOSHIBA
IC16	TC4S81F-X	I.C.(M)	TOSHIBA
IC17	TC4S11F-X	I.C.(M)	TOSHIBA
IC18	TC7S04F-X	I.C.(M)	TOSHIBA
IC19	TC7S04F-X	I.C.(M)	TOSHIBA
IC101	AD8011AR-X	I.C.(M)	ANALOG DEVICES
IC102	TC4W53F-X	I.C.(M)	TOSHIBA
IC103	AD8041AR-XE	I.C.(M)	ANALOG DEVICES
IC104	LMC6082IM-X	I.C.(M)	NATIONAL SEMICO
IC201	AD8011AR-X	I.C.(M)	ANALOG DEVICES
IC202	TC4W53F-X	I.C.(M)	TOSHIBA
IC203	AD8041AR-XE	I.C.(M)	ANALOG DEVICES
IC204	LMC6082IM-X	I.C.(M)	NATIONAL SEMICO
IC301	AD8011AR-X	I.C.(M)	ANALOG DEVICES
IC302	TC4W53F-X	I.C.(M)	TOSHIBA
IC303	AD8041AR-XE	I.C.(M)	ANALOG DEVICES
IC401	NJM062M-X	I.C.(M)	JRC
IC402	TC4S66F-X	I.C.(M)	TOSHIBA
IC403	NJM062M-X	I.C.(M)	JRC
IC502	TC4S66F-X	I.C.(M)	TOSHIBA
IC503	NJM062M-X	I.C.(M)	JRC
IC601	NJM062M-X	I.C.(M)	JRC
IC602	TC4S66F-X	I.C.(M)	TOSHIBA
IC603	NJM062M-X	I.C.(M)	JRC
IC701	NJM062M-X	I.C.(M)	JRC
IC702	UPD16510GR-X	I.C.(M)	NEC
IC703	UPD16510GR-X	I.C.(M)	NEC
IC802	UPD16510GR-X	I.C.(M)	NEC
IC803	UPD16510GR-X	I.C.(M)	NEC
IC901	NJM062M-X	I.C.(M)	JRC
IC902	UPD16510GR-X	I.C.(M)	NEC
IC903	UPD16510GR-X	I.C.(M)	NEC
Q1	DTA124EUA-X	TRANSISTOR	ROHM
Q3	MSC3930/B/-X	TRANSISTOR	MOTOROLA
Q4	2SB1219/QR/-X	TRANSISTOR	MATSUSHITA
Q5	2SD1820/QR/-X	TRANSISTOR	MATSUSHITA
Q6	2SD1820/QR/-X	TRANSISTOR	MATSUSHITA
Q7	2SD1820/QR/-X	TRANSISTOR	MATSUSHITA
Q8	2SB1219/QR/-X	TRANSISTOR	MATSUSHITA
Q35	2SB1219/QR/-X	TRANSISTOR	MATSUSHITA
Q101	2SA1532/BC/-X	TRANSISTOR	MATSUSHITA
Q103	2SA1532/BC/-X	TRANSISTOR	MATSUSHITA
Q104	3SK157/4-6/-W	FET	NEC
Q105	2SA1532/BC/-X	TRANSISTOR	MATSUSHITA
Q106	MSC3930/B/-X	TRANSISTOR	MOTOROLA
Q107	3SK157/4-6/-W	FET	NEC
Q201	2SA1532/BC/-X	TRANSISTOR	MATSUSHITA
Q203	2SA1532/BC/-X	TRANSISTOR	MATSUSHITA
Q204	3SK157/4-6/-W	FET	NEC
Q205	2SA1532/BC/-X	TRANSISTOR	MATSUSHITA
Q206	MSC3930/B/-X	TRANSISTOR	MOTOROLA
Q207	3SK157/4-6/-W	FET	NEC
Q301	2SA1532/BC/-X	TRANSISTOR	MATSUSHITA
Q303	2SA1532/BC/-X	TRANSISTOR	MATSUSHITA
Q304	3SK157/4-6/-W	FET	NEC
Q305	2SA1532/BC/-X	TRANSISTOR	MATSUSHITA
Q306	MSC3930/B/-X	TRANSISTOR	MOTOROLA
Q307	3SK157/4-6/-W	FET	NEC
Q701	2SA1462/3-4/-X	TRANSISTOR	NEC
Q702	2SC3735/4-5/-X	TRANSISTOR	NEC

Symbol No.	Part No.	Part Name	Description
Q801	2SA1462/3-4/-X	TRANSISTOR	NEC
Q802	2SC3735/4-5/-X	TRANSISTOR	NEC
Q901	2SA1462/3-4/-X	TRANSISTOR	NEC
Q902	2SC3735/4-5/-X	TRANSISTOR	NEC
D2	MA142A-X	DIODE	MATSUSHITA
D3	MA142WA-X	DIODE	MATSUSHITA
D6	MA142A-X	DIODE	MATSUSHITA
D7	MA142WA-X	DIODE	MATSUSHITA
D403	MA742-X	DIODE	MATSUSHITA
D503	MA742-X	DIODE	MATSUSHITA
D603	MA742-X	DIODE	MATSUSHITA
D701	MA143A-X	DIODE	MATSUSHITA
D702	MA142WA-X	DIODE	MATSUSHITA
D703	MA142A-X	DIODE	MATSUSHITA
D704	MA742-X	DIODE	MATSUSHITA
D705	MA742-X	DIODE	MATSUSHITA
D801	MA143A-X	DIODE	MATSUSHITA
D802	MA142WA-X	DIODE	MATSUSHITA
D803	MA142WA-X	DIODE	MATSUSHITA
D804	MA742-X	DIODE	MATSUSHITA
D805	MA742-X	DIODE	MATSUSHITA
D902	MA142WA-X	DIODE	MATSUSHITA
D904	MA742-X	DIODE	MATSUSHITA
D905	MA742-X	DIODE	MATSUSHITA
R1	NRSA63J-0R0X	M.G.RESISTOR	0 1/16W (E)
R2	NRSA63J-0R0X	M.G.RESISTOR	0 1/16W
R4	NRSA63D-331X	M.G.RESISTOR	330 1/16W
R5	NRSA63D-561X	M.G.RESISTOR	560 1/16W
R6	NRSA63D-101X	M.G.RESISTOR	100 1/16W
R7	NRSA63D-221X	M.G.RESISTOR	220 1/16W
R8	NRSA63D-220X	M.G.RESISTOR	22 1/16W
R9	NRSA63D-101X	M.G.RESISTOR	100 1/16W
R12	NRSA63D-471X	M.G.RESISTOR	470 1/16W
R13	NRSA63D-101X	M.G.RESISTOR	100 1/16W
R14	NRSA63D-101X	M.G.RESISTOR	100 1/16W
R15	NRSA63D-220X	M.G.RESISTOR	22 1/16W
R16	NRSA63D-220X	M.G.RESISTOR	22 1/16W
R17	NRSA63D-220X	M.G.RESISTOR	22 1/16W
R18	NRSA63J-0R0X	M.G.RESISTOR	0 1/16W
R19	NRSA63D-103X	M.G.RESISTOR	10k 1/16W
R20	NRSA63D-0R0X	M.G.RESISTOR	0 1/16W
R21	NRSA63D-330X	M.G.RESISTOR	33 1/16W
R22	NRSA63D-151X	M.G.RESISTOR	150 1/16W
R23	NRSA63J-0R0X	M.G.RESISTOR	0 1/16W
R24	NRSA63D-563X	M.G.RESISTOR	56k 1/16W
R25	NRSA63D-333X	M.G.RESISTOR	33k 1/16W
R26	NRSA63D-330X	M.G.RESISTOR	33 1/16W
R27	NRSA63J-0R0X	M.G.RESISTOR	0 1/16W
R28	NRSA63D-393X	M.G.RESISTOR	39k 1/16W
R29	NRSA63D-333X	M.G.RESISTOR	33k 1/16W
R30	NRSA63D-104X	M.G.RESISTOR	100k 1/16W
R31	NRSA63D-223X	M.G.RESISTOR	22k 1/16W
R32	NRSA63D-102X	M.G.RESISTOR	1k 1/16W
R33	NRSA63D-102X	M.G.RESISTOR	1k 1/16W
R34	NRSA63J-0R0X	M.G.RESISTOR	0 1/16W
R35	NRSA63J-0R0X	M.G.RESISTOR	0 1/16W
R37	NRSA63J-0R0X	M.G.RESISTOR	0 1/16W
R39	NRSA63J-0R0X	M.G.RESISTOR	0 1/16W
R42	NRSA63J-0R0X	M.G.RESISTOR	0 1/16W
R44	NRSA63J-0R0X	M.G.RESISTOR	0 1/16W
R45	NRSA63J-0R0X	M.G.RESISTOR	0 1/16W (E)
R46	NRSA63D-272X	M.G.RESISTOR	2.7k 1/16W
R47	NRSA63D-751X	M.G.RESISTOR	750 1/16W
R48	NRSA63D-103X	M.G.RESISTOR	10k 1/16W
R49	NRSA63D-103X	M.G.RESISTOR	10k 1/16W
R50	NRSA63D-103X	M.G.RESISTOR	10k 1/16W
R51	NRSA63D-102X	M.G.RESISTOR	1k 1/16W
R52	NRSA63D-102X	M.G.RESISTOR	1k 1/16W
R53	NRSA63D-102X	M.G.RESISTOR	1k 1/16W
R54	NRSA63J-0R0X	M.G.RESISTOR	0 1/16W

Symbol No.	Part No.	Part Name	Description	
R55	NRSA63J-0R0X	M.G.RESISTOR	0	1/16W
R56	NRSA63J-0R0X	M.G.RESISTOR	0	1/16W
R57	NRSA63J-0R0X	M.G.RESISTOR	0	1/16W
R58	NRSA63D-181X	M.G.RESISTOR	180	1/16W
R59	NRSA63J-0R0X	M.G.RESISTOR	0	1/16W
R60	NRSA63D-221X	M.G.RESISTOR	220	1/16W
R61	NRSA63D-223X	M.G.RESISTOR	22k	1/16W
R62	NRSA63J-4R7X	M.G.RESISTOR	4.7	1/16W
R63	NRSA63D-103X	M.G.RESISTOR	10k	1/16W
R64	NRSA63D-102X	M.G.RESISTOR	1k	1/16W
R65	NRSA63D-822X	M.G.RESISTOR	8.2k	1/16W
R66	NRSA63D-123X	M.G.RESISTOR	12k	1/16W
R67	NRSA63J-100X	M.G.RESISTOR	10	1/16W
R68	NRSA63D-103X	M.G.RESISTOR	10k	1/16W
R69	NRSA63D-222X	M.G.RESISTOR	2.2k	1/16W
R70	NRSA63D-153X	M.G.RESISTOR	15k	1/16W
R71	NRSA63D-103X	M.G.RESISTOR	10k	1/16W
R72	NRSA63D-822X	M.G.RESISTOR	8.2k	1/16W
R73	NRSA63D-123X	M.G.RESISTOR	12k	1/16W
R74	NRSA63D-103X	M.G.RESISTOR	10k	1/16W
R75	NRSA63D-472X	M.G.RESISTOR	4.7k	1/16W
R76	NRSA63D-183X	M.G.RESISTOR	18k	1/16W
R77	NRSA63D-392X	M.G.RESISTOR	3.9k	1/16W
R78	NRSA63D-223X	M.G.RESISTOR	22k	1/16W
R79	NRSA63D-333X	M.G.RESISTOR	33k	1/16W
R80	NRSA63D-333X	M.G.RESISTOR	33k	1/16W
R81	NRSA63D-822X	M.G.RESISTOR	8.2k	1/16W
R82	NRSA63D-562X	CAR.RESISTOR	5.6k	1/4W
R90	NRSA63J-0R0X	M.G.RESISTOR	0	1/16W
R91	NRSA63J-0R0X	M.G.RESISTOR	0	1/16W
R92	NRSA63J-0R0X	M.G.RESISTOR	0	1/16W
R101	NRSA63D-221X	M.G.RESISTOR	220	1/16W
R102	NRSA63D-561X	M.G.RESISTOR	560	1/16W
R103	NRSA63D-473X	M.G.RESISTOR	47k	1/16W
R104	NRSA63D-223X	M.G.RESISTOR	22k	1/16W
R105	NRSA63D-221X	M.G.RESISTOR	220	1/16W
R106	NRSA63D-102X	M.G.RESISTOR	1k	1/16W
R107	NRSA63D-301X	M.G.RESISTOR	300	1/16W
R110	NRSA63D-680X	M.G.RESISTOR	68	1/16W
R111	NRSA63D-101X	M.G.RESISTOR	100	1/16W
R112	NRSA63D-220X	M.G.RESISTOR	22	1/16W
R113	NRSA63D-272X	M.G.RESISTOR	2.7k	1/16W
R114	NRSA63D-181X	M.G.RESISTOR	180	1/16W
R115	NRSA63D-102X	M.G.RESISTOR	1k	1/16W
R116	NRSA63D-472X	M.G.RESISTOR	4.7k	1/16W
R117	NRSA63D-103X	M.G.RESISTOR	10k	1/16W
R118	NRSA63D-103X	M.G.RESISTOR	10k	1/16W
R119	NRSA63D-334X	M.G.RESISTOR	330k	1/16W
R120	NRSA63J-0R0X	M.G.RESISTOR	0	1/16W
R122	NRSA63D-104X	M.G.RESISTOR	100k	1/16W
R124	NRSA63D-823X	M.G.RESISTOR	82k	1/16W
R201	NRSA63D-221X	M.G.RESISTOR	220	1/16W
R202	NRSA63D-561X	M.G.RESISTOR	560	1/16W
R203	NRSA63D-473X	M.G.RESISTOR	47k	1/16W
R204	NRSA63D-223X	M.G.RESISTOR	22k	1/16W
R205	NRSA63D-221X	M.G.RESISTOR	220	1/16W
R206	NRSA63D-102X	M.G.RESISTOR	1k	1/16W
R207	NRSA63D-301X	M.G.RESISTOR	300	1/16W
R210	NRSA63D-680X	M.G.RESISTOR	68	1/16W
R211	NRSA63D-101X	M.G.RESISTOR	100	1/16W
R212	NRSA63D-220X	M.G.RESISTOR	22	1/16W
R213	NRSA63D-272X	M.G.RESISTOR	2.7k	1/16W
R214	NRSA63D-181X	M.G.RESISTOR	180	1/16W
R215	NRSA63D-102X	M.G.RESISTOR	1k	1/16W
R216	NRSA63D-472X	M.G.RESISTOR	4.7k	1/16W
R217	NRSA63D-103X	M.G.RESISTOR	10k	1/16W
R218	NRSA63D-103X	M.G.RESISTOR	10k	1/16W
R219	NRSA63D-334X	M.G.RESISTOR	330k	1/16W
R220	NRSA63J-0R0X	M.G.RESISTOR	0	1/16W
R223	NRSA63D-333X	M.G.RESISTOR	33k	1/16W
R224	NRSA63D-823X	M.G.RESISTOR	82k	1/16W
R226	NRSA63D-473X	M.G.RESISTOR	47k	1/16W
R227	NRSA63D-122X	M.G.RESISTOR	1.2k	1/16W

Symbol No.	Part No.	Part Name	Description	
R228	NRSA63D-243X	M.G.RESISTOR	24k	1/16W
R250	NRSA63D-472X	M.G.RESISTOR	4.7k	1/16W
R260	NRSA63D-223X	M.G.RESISTOR	22k	1/16W
R251	NRSA63D-392X	M.G.RESISTOR	3.9k	1/16W
R252	NRSA63D-103X	M.G.RESISTOR	10k	1/16W
R301	NRSA63D-221X	M.G.RESISTOR	220	1/16W
R302	NRSA63D-561X	M.G.RESISTOR	560	1/16W
R303	NRSA63D-473X	M.G.RESISTOR	47k	1/16W
R304	NRSA63D-223X	M.G.RESISTOR	22k	1/16W
R305	NRSA63D-221X	M.G.RESISTOR	220	1/16W
R306	NRSA63D-102X	M.G.RESISTOR	1k	1/16W
R307	NRSA63D-301X	M.G.RESISTOR	300	1/16W
R310	NRSA63D-680X	M.G.RESISTOR	68	1/16W
R311	NRSA63D-101X	M.G.RESISTOR	100	1/16W
R312	NRSA63D-220X	M.G.RESISTOR	22	1/16W
R313	NRSA63D-272X	M.G.RESISTOR	2.7k	1/16W
R314	NRSA63D-181X	M.G.RESISTOR	180	1/16W
R315	NRSA63D-102X	M.G.RESISTOR	1k	1/16W
R316	NRSA63D-472X	M.G.RESISTOR	4.7k	1/16W
R317	NRSA63D-103X	M.G.RESISTOR	10k	1/16W
R318	NRSA63D-103X	M.G.RESISTOR	10k	1/16W
R319	NRSA63D-334X	M.G.RESISTOR	330k	1/16W
R320	NRSA63J-0R0X	M.G.RESISTOR	0	1/16W
R324	NRSA63D-823X	M.G.RESISTOR	82k	1/16W
R360	NRSA63D-223X	M.G.RESISTOR	22k	1/16W
R402	NRSA63D-224X	M.G.RESISTOR	220k	1/16W
R403	NRSA63D-274X	M.G.RESISTOR	270k	1/16W
R404	NRSA63D-124X	M.G.RESISTOR	120k	1/16W
R406	NRSA63D-124X	M.G.RESISTOR	120k	1/16W
R407	NRSA63D-124X	M.G.RESISTOR	120k	1/16W
R408	NRSA63D-101X	M.G.RESISTOR	100	1/16W
R412	NRSA63D-183X	M.G.RESISTOR	18k	1/16W
R413	NRSA63D-274X	M.G.RESISTOR	270k	1/16W
R414	NRSA63D-363X	M.G.RESISTOR	36k	1/16W
R415	NRSA63D-102X	M.G.RESISTOR	1k	1/16W
R416	NRSA63D-104X	M.G.RESISTOR	100k	1/16W
R417	NRSA63D-104X	M.G.RESISTOR	100k	1/16W
R418	NRSA63D-821X	M.G.RESISTOR	820	1/16W
R419	NRSA63D-821X	M.G.RESISTOR	820	1/16W
R420	NRSA63D-822X	M.G.RESISTOR	8.2k	1/16W
R421	NRSA63D-243X	M.G.RESISTOR	24k	1/16W
R422	NRSA63D-102X	M.G.RESISTOR	1k	1/16W
R423	NRSA63D-103X	M.G.RESISTOR	10k	1/16W
R424	NRSA63D-752X	M.G.RESISTOR	7.5k	1/16W
R425	NRSA63D-822X	M.G.RESISTOR	8.2k	1/16W
R426	NRSA63D-823X	M.G.RESISTOR	82k	1/16W
R427	NRSA63D-102X	M.G.RESISTOR	1k	1/16W
R503	NRSA63D-274X	M.G.RESISTOR	270k	1/16W
R504	NRSA63D-124X	M.G.RESISTOR	120k	1/16W
R505	NRSA63D-334X	M.G.RESISTOR	330k	1/16W
R506	NRSA63D-124X	M.G.RESISTOR	120k	1/16W
R507	NRSA63D-334X	M.G.RESISTOR	330k	1/16W
R508	NRSA63D-101X	M.G.RESISTOR	100	1/16W
R512	NRSA63D-183X	M.G.RESISTOR	18k	1/16W
R513	NRSA63D-274X	M.G.RESISTOR	270k	1/16W
R514	NRSA63D-363X	M.G.RESISTOR	36k	1/16W
R515	NRSA63D-102X	M.G.RESISTOR	1k	1/16W
R516	NRSA63D-104X	M.G.RESISTOR	100k	1/16W
R517	NRSA63D-104X	M.G.RESISTOR	100k	1/16W
R518	NRSA63D-821X	M.G.RESISTOR	820	1/16W
R519	NRSA63D-821X	M.G.RESISTOR	820	1/16W
R520	NRSA63D-822X	M.G.RESISTOR	8.2k	1/16W
R521	NRSA63D-393X	M.G.RESISTOR	39k	1/16W
R522	NRSA63D-102X	M.G.RESISTOR	1k	1/16W
R524	NRSA63D-752X	M.G.RESISTOR	7.5k	1/16W
R525	NRSA63D-153X	M.G.RESISTOR	15k	1/16W
R526	NRSA63D-304X	M.G.RESISTOR	300k	1/16W
R527	NRSA63D-102X	M.G.RESISTOR	1k	1/16W
R602	NRSA63D-224X	M.G.RESISTOR	220k	1/16W
R603	NRSA63D-274X	M.G.RESISTOR	270k	1/16W
R604	NRSA63D-124X	M.G.RESISTOR	120k	1/16W
R606	NRSA63D-124X	M.G.RESISTOR	120k	1/16W

[DR]

Symbol No.	Part No.	Part Name	Description	
R607	NRSA63D-124X	M.G.RESISTOR	120k	1/16W
R608	NRSA63D-101X	M.G.RESISTOR	100	1/16W
R612	NRSA63D-183X	M.G.RESISTOR	18k	1/16W
R613	NRSA63D-274X	M.G.RESISTOR	270k	1/16W
R614	NRSA63D-363X	M.G.RESISTOR	36k	1/16W
R615	NRSA63D-102X	M.G.RESISTOR	1k	1/16W
R616	NRSA63D-104X	M.G.RESISTOR	100k	1/16W
R617	NRSA63D-104X	M.G.RESISTOR	100k	1/16W
R618	NRSA63D-821X	M.G.RESISTOR	820	1/16W
R619	NRSA63D-821X	M.G.RESISTOR	820	1/16W
R620	NRSA63D-822X	M.G.RESISTOR	8.2k	1/16W
R621	NRSA63D-183X	M.G.RESISTOR	18k	1/16W
R622	NRSA63D-102X	M.G.RESISTOR	1k	1/16W
R623	NRSA63D-183X	M.G.RESISTOR	18k	1/16W
R624	NRSA63D-752X	M.G.RESISTOR	7.5k	1/16W
R625	NRSA63D-103X	M.G.RESISTOR	10k	1/16W
R626	NRSA63J-105X	M.G.RESISTOR	1M	1/16W
R627	NRSA63D-102X	M.G.RESISTOR	1k	1/16W
R703	NRSA63D-104X	M.G.RESISTOR	100k	1/16W
R704	NRSA63D-104X	M.G.RESISTOR	100k	1/16W
R705	NRSA63J-105X	M.G.RESISTOR	1M	1/16W
R706	NRSA63D-103X	M.G.RESISTOR	10k	1/16W
R707	NRSA63J-100X	M.G.RESISTOR	10	1/16W
R708	NRSA63J-100X	M.G.RESISTOR	10	1/16W
R709	NRSA63D-104X	M.G.RESISTOR	100k	1/16W
R710	NRSA63D-560X	M.G.RESISTOR	56	1/16W
R711	NRSA63D-560X	M.G.RESISTOR	56	1/16W
R779	NRSA63D-103X	M.G.RESISTOR	10k	1/16W
R803	NRSA63D-104X	M.G.RESISTOR	100k	1/16W
R804	NRSA63D-104X	M.G.RESISTOR	100k	1/16W
R805	NRSA63J-105X	M.G.RESISTOR	1M	1/16W
R806	NRSA63D-103X	M.G.RESISTOR	10k	1/16W
R807	NRSA63J-100X	M.G.RESISTOR	10	1/16W
R808	NRSA63J-100X	M.G.RESISTOR	10	1/16W
R809	NRSA63D-104X	M.G.RESISTOR	100k	1/16W
R810	NRSA63D-560X	M.G.RESISTOR	56	1/16W
R811	NRSA63D-560X	M.G.RESISTOR	56	1/16W
R903	NRSA63D-104X	M.G.RESISTOR	100k	1/16W
R904	NRSA63D-104X	M.G.RESISTOR	100k	1/16W
R905	NRSA63J-105X	M.G.RESISTOR	1M	1/16W
R906	NRSA63D-103X	M.G.RESISTOR	10k	1/16W
R907	NRSA63J-100X	M.G.RESISTOR	10	1/16W
R908	NRSA63J-100X	M.G.RESISTOR	10	1/16W
R910	NRSA63D-560X	M.G.RESISTOR	56	1/16W
R911	NRSA63D-560X	M.G.RESISTOR	56	1/16W
VR201	NVP1416-502X	TRIM.RESISTOR	5k	
VR301	NVP1416-502X	TRIM.RESISTOR	5k	
C1	NCB31CK-473X	CER.CAPACITOR	0.047	16V
C2	NBE21AM-106X	TAN.CAPACITOR	10	10V
C3	NDC31HJ-270X	CER.CAPACITOR	27p	50V
C4	NDC31HJ-270X	CER.CAPACITOR	27p	50V
C5	NDC31HJ-270X	CER.CAPACITOR	27p	50V
C6	NDC31HJ-270X	CER.CAPACITOR	27p	50V
C7	NDC31HJ-270X	CER.CAPACITOR	27p	50V
C8	NCB31CK-473X	CER.CAPACITOR	0.047	16V
C9	NBE71CM-476X	TAN.CAPACITOR	47	16V
C10	NBE71CM-476X	TAN.CAPACITOR	47	16V
C11	NCB31CK-473X	CER.CAPACITOR	0.047	16V
C12	NBE21VM-104X	TAN.CAPACITOR	0.1	35V
C13	NCB31CK-473X	CER.CAPACITOR	0.047	16V
C14	NCB31CK-473X	CER.CAPACITOR	0.047	16V
C15	NCB31CK-473X	CER.CAPACITOR	0.047	16V
C16	NCB31CK-473X	CER.CAPACITOR	0.047	16V
C17	NCB31CK-473X	CER.CAPACITOR	0.047	16V
C18	NCB11CK-105X	CER.CAPACITOR	1	16V
C19	NCB31CK-473X	CER.CAPACITOR	0.047	16V
C20	NCB31CK-473X	CER.CAPACITOR	0.047	16V
C21	NCB10JM-335X	CER.CAPACITOR	3.3	6.3V
C22	NCB31CK-473X	CER.CAPACITOR	0.047	16V
C23	NCB31CK-473X	CER.CAPACITOR	0.047	16V

Symbol No.	Part No.	Part Name	Description	
C24	NCB31CK-473X	CER.CAPACITOR	0.047	16V
C25	NEH91CM-106X	E.CAPACITOR	10	16V
C26	NBE21EM-105X	TAN.CAPACITOR	1	25V
C27	NEH91CM-476X	E.CAPACITOR	47	16V
C28	NEH71AM-227X	E.CAPACITOR	220	10V
C29	NCB31CK-473X	CER.CAPACITOR	0.047	16V
C30	NBE71CM-476X	TAN.CAPACITOR	47	16V
C31	NCB31CK-473X	CER.CAPACITOR	0.047	16V
C32	NCB31CK-473X	CER.CAPACITOR	0.047	16V
C33	NCB31CK-473X	CER.CAPACITOR	0.047	16V
C34	NCB31CK-473X	CER.CAPACITOR	0.047	16V
C35	NCB31CK-473X	CER.CAPACITOR	0.047	16V
C36	NBE71VM-106X	TAN.CAPACITOR	10	35V
C37	NBE71CM-476X	TAN.CAPACITOR	47	16V
C38	NBE41CM-106X	TAN.CAPACITOR	10	16V
C39	NEH71CM-337X	E.CAPACITOR	330	16V
C40	NEH71CM-337X	E.CAPACITOR	330	16V
C41	NBE71CM-476X	TAN.CAPACITOR	47	16V
C42	NBE21CM-225X	TAN.CAPACITOR	2.2	16V
C43	NEH90JM-107X	E.CAPACITOR	100	6.3V
C44	NBE20JM-106X	TAN.CAPACITOR	10	6.3V
C45	NEH91CM-106X	E.CAPACITOR	10	16V
C46	NCB31CK-473X	CER.CAPACITOR	0.047	16V
C47	NEH91CM-106X	E.CAPACITOR	10	16V
C48	NCB31CK-473X	CER.CAPACITOR	0.047	16V
C49	NBE21CM-225X	TAN.CAPACITOR	2.2	16V
C50	NBE40GM-476X	TAN.CAPACITOR	47	
C51	NBE21CM-225X	TAN.CAPACITOR	2.2	16V
C52	NBE41CM-156X	TAN.CAPACITOR	15	16V
C53	NCB31CK-473X	CER.CAPACITOR	0.047	16V
C54	NCB31CK-473X	CER.CAPACITOR	0.047	16V
C55	NBE21EM-105X	TAN.CAPACITOR	1	25V
C56	NDC31HJ-270X	CER.CAPACITOR	27p	50V
C57	NDC31HJ-680X	CER.CAPACITOR	68p	50V
C58	NEH61EM-106X	E.CAPACITOR	10	25V
C84	NBE21EM-105X	TAN.CAPACITOR	1	25V
C98	NBE41AM-226X	TAN.CAPACITOR	22	10V
C102	NCB31CK-473X	CER.CAPACITOR	0.047	16V
C103	NCB31CK-473X	CER.CAPACITOR	0.047	16V
C104	NDC31HJ-680X	CER.CAPACITOR	68p	50V
C105	NCB31CK-473X	CER.CAPACITOR	0.047	16V
C106	NCB31CK-473X	CER.CAPACITOR	0.047	16V
C107	NCB21EK-104X	CER.CAPACITOR	0.1	25V
C108	NCB31CK-473X	CER.CAPACITOR	0.047	16V
C109	NCB31CK-104X	CER.CAPACITOR	0.1	16V
C113	NCB31CK-473X	CER.CAPACITOR	0.047	16V
C114	NCB31CK-473X	CER.CAPACITOR	0.047	16V
C120	NDC31HJ-560X	CER.CAPACITOR	56p	50V
C124	NCB31CK-473X	CER.CAPACITOR	0.047	16V
C202	NCB31CK-473X	CER.CAPACITOR	0.047	16V
C203	NCB31CK-473X	CER.CAPACITOR	0.047	16V
C204	NDC31HJ-680X	CER.CAPACITOR	68p	50V
C205	NCB31CK-473X	CER.CAPACITOR	0.047	16V
C206	NCB31CK-473X	CER.CAPACITOR	0.047	16V
C207	NCB21EK-104X	CER.CAPACITOR	0.1	25V
C208	NCB31CK-473X	CER.CAPACITOR	0.047	16V
C209	NCB31CK-104X	CER.CAPACITOR	0.1	16V
C213	NCB31CK-473X	CER.CAPACITOR	0.047	16V
C214	NCB31CK-473X	CER.CAPACITOR	0.047	16V
C220	NDC31HJ-560X	CER.CAPACITOR	56p	50V
C302	NCB31CK-473X	CER.CAPACITOR	0.047	16V
C303	NCB31CK-473X	CER.CAPACITOR	0.047	16V
C304	NDC31HJ-680X	CER.CAPACITOR	68p	50V
C305	NCB31CK-473X	CER.CAPACITOR	0.047	16V
C306	NCB31CK-473X	CER.CAPACITOR	0.047	16V
C307	NCB21EK-104X	CER.CAPACITOR	0.1	25V
C308	NCB31CK-473X	CER.CAPACITOR	0.047	16V
C309	NCB31CK-104X	CER.CAPACITOR	0.1	16V
C320	NDC31HJ-560X	CER.CAPACITOR	56p	50V
C401	NCB31EK-103X	CER.CAPACITOR	0.01	25V
C403	NCB31CK-473X	CER.CAPACITOR	0.047	16V
C404	NFV41CJ-104X	FILM CAPACITOR	0.1	16V
C501	NCB31EK-103X	CER.CAPACITOR	0.01	25V

6.2 ISB BOARD ASSEMBLY PARTS LIST [0][2]

SCK2523-01-00A [0][2]□□□□□□

Symbol No.	Part No.	Part Name	Description	
C503	NCB31CK-473X	CER.CAPACITOR	0.047	16V
C504	NFV41CJ-104X	FILM CAPACITOR	0.1	16V
C601	NCB31EK-103X	CER.CAPACITOR	0.01	25V
C603	NCB31CK-473X	CER.CAPACITOR	0.047	16V
C604	NFV41CJ-104X	FILM CAPACITOR	0.1	16V
C701	NCB31CK-473X	CER.CAPACITOR	0.047	16V
C702	NDC31HJ-270X	CER.CAPACITOR	27p	50V
C703	NDC31HJ-270X	CER.CAPACITOR	27p	50V
C704	NCB31HK-103X	CER.CAPACITOR	0.01	50V
C706	NEH91HM-105X	E.CAPACITOR	1	50V
C707	NCB31CK-473X	CER.CAPACITOR	0.047	16V
C801	NCB31CK-473X	CER.CAPACITOR	0.047	16V
C802	NDC31HJ-270X	CER.CAPACITOR	27p	50V
C803	NDC31HJ-270X	CER.CAPACITOR	27p	50V
C804	NCB31HK-103X	CER.CAPACITOR	0.01	50V
C806	NEH91HM-105X	E.CAPACITOR	1	50V
C807	NCB31CK-473X	CER.CAPACITOR	0.047	16V
C808	NCB31CK-473X	CER.CAPACITOR	0.047	16V
C901	NCB31CK-473X	CER.CAPACITOR	0.047	16V
C902	NDC31HJ-270X	CER.CAPACITOR	27p	50V
C903	NDC31HJ-270X	CER.CAPACITOR	27p	50V
C904	NCB31HK-103X	CER.CAPACITOR	0.01	50V
C905	NCB31EK-223X	CER.CAPACITOR	0.022	25V
C906	NEH91HM-105X	E.CAPACITOR	1	50V
LC1	EXC-CET471U	LC FILTER	LC1-3	
LC7	SCV1804-222Z	LC FILTER	LC7-11	
LC101	NQR0122-001X	LC FILTER	LC101-301	
CN1	QGA1201C2-06X	CONNECTOR	6PIN	
CN2	QGA1201C2-09X	CONNECTOR	9PIN	
CN3	QGF0508F1-30X	CONNECTOR	30PIN	
CN4	QGF0508F1-30X	CONNECTOR	30PIN	
CN5	QGF0508F1-30X	CONNECTOR	30PIN	
CN6	QGA1201C2-11X	CONNECTOR	11PIN	
TP101	NNZ0022-001X	TEST POINT	TP101-303	
K13	SCV2662-027	FERRITE BEADS	K13-16	
K17	NQR0292-001X	FERAITE BEAD	K17,18,50,101	
K19	NQR0265-001X	FERAITE BEAD	K19,49,51	
K102	SCV2662-027	FERRITE BEADS	K102,103	(U)
K104	NQR0292-001X	FERAITE BEAD	K104,201	
K105	SCV2662-027	FERRITE BEADS	K105,106	
K107	NRSA63J-0R0X	M.G.RESISTOR	0	1/16W
K108	NQR0265-001X	FERAITE BEAD	K108-116	
K201	NQR0292-001X	FERAITE BEAD	K201,204	(E)
K202	SCV2662-027	FERRITE BEADS	K202,203	
K204	NQR0292-001X	FERAITE BEAD		(U)
K205	SCV2662-027	FERRITE BEADS	K205,206	
K207	NRSA63J-0R0X	M.G.RESISTOR	0	1/16W
K208	NQR0265-001X	FERAITE BEAD	K208-216	
K301	NQR0292-001X	FERAITE BEAD	K301,304	
K302	SCV2662-027	FERRITE BEADS	K302,303	
K305	SCV2662-027	FERRITE BEADS	K305,306	
K307	NRSA63J-0R0X	M.G.RESISTOR	0	1/16W
K308	NQR0265-001X	FERAITE BEAD	K308-316	
TB1	PGZ02228	EARTH LUG	TB1,2	

Symbol No.	Part No.	Part Name	Description	
IC2	TC74HC04AF-X	I.C.(M)	TOSHIBA	
IC3	AD8011AR-X	I.C.(M)	ANALOG DEVICES	
IC4	OPA655U-XE	I.C.(M)	BURR BROWN	
IC7	AD603AR-X	I.C.(M)	ANALOG DEVICES	
Q1	2SA1226T2B	TRANSISTOR	NEC	
Q2	3SK157/4-6/-W	FET	NEC	
Q3	3SK157/4-6/-W	FET	NEC	
Q4	3SK157/4-6/-W	FET	NEC	
Q6	3SK157/4-6/-W	FET	NEC	
D1	HSM198S-W	DIODE	HITACHI	
R1	NRSA63D-220X	M.G.RESISTOR	22	1/16W
R2	NRSA63D-332X	M.G.RESISTOR	3.3k	1/16W
R3	NRSA63J-105X	M.G.RESISTOR	1M	1/16W
R4	NRSA63D-332X	M.G.RESISTOR	3.3k	1/16W
R5	NRSA63J-100X	M.G.RESISTOR	10	1/16W
R6	NRSA63J-100X	M.G.RESISTOR	10	1/16W
R7	NRSA63J-100X	M.G.RESISTOR	10	1/16W
R8	NRSA63J-100X	M.G.RESISTOR	10	1/16W
R9	NRSA63J-100X	M.G.RESISTOR	10	1/16W
R13	NRSA63D-221X	M.G.RESISTOR	220	1/16W
R14	NRSA63D-224X	M.G.RESISTOR	220k	1/16W
R15	NRSA63D-152X	M.G.RESISTOR	1.5k	1/16W
R16	NRSA63D-391X	M.G.RESISTOR	390	1/16W
R18	NRSA63D-102X	M.G.RESISTOR	1k	1/16W
R19	NRSA63D-181X	M.G.RESISTOR	180	1/16W
R20	NRSA63D-181X	M.G.RESISTOR	180	1/16W
R21	NRSA63D-101X	M.G.RESISTOR	100	1/16W
R22	NRSA63D-101X	M.G.RESISTOR	100	1/16W
R24	NRSA63D-122X	M.G.RESISTOR	1.2k	1/16W
R25	NRSA63D-822X	M.G.RESISTOR	8.2k	1/16W
R26	NRSA63D-102X	M.G.RESISTOR	1k	1/16W
R27	NRSA63J-105X	M.G.RESISTOR	1M	1/16W
R30	NRSA63J-105X	M.G.RESISTOR	1M	1/16W
R33	NRSA63D-220X	M.G.RESISTOR	22	1/16W
R34	NRSA63D-102X	M.G.RESISTOR	1k	1/16W
R35	NRSA63D-101X	M.G.RESISTOR	100	1/16W
C1	NBE21AM-106X	TAN.CAPACITOR	10	10V
C2	NBE21AM-106X	TAN.CAPACITOR	10	10V
C3	NBE21EM-105X	TAN.CAPACITOR	1	25V
C6	NBE21CM-225X	TAN.CAPACITOR	2.2	16V
C7	NBE41VM-335X	TAN.CAPACITOR	3.3	35V
C8	NCB31EK-103X	CER.CAPACITOR	0.01	25V
C9	NCB31EK-103X	CER.CAPACITOR	0.01	25V
C10	NCB31CK-473X	CER.CAPACITOR	0.047	16V
C11	NDC31HJ-680X	CER.CAPACITOR	68p	50V
C12	NBE21CM-225X	TAN.CAPACITOR	2.2	16V
C13	NBE21CM-225X	TAN.CAPACITOR	2.2	16V
C14	NDC31HJ-150X	CER.CAPACITOR	15p	50V
C15	NDC31HJ-150X	CER.CAPACITOR	15p	50V
C16	NBE21CM-225X	TAN.CAPACITOR	2.2	16V
C17	NBE21CM-225X	TAN.CAPACITOR	2.2	16V
C19	NBE21CM-225X	TAN.CAPACITOR	2.2	16V
C20	NBE21CM-225X	TAN.CAPACITOR	2.2	16V
C22	NDC31HJ-820X	CER.CAPACITOR	82p	50V
C25	NDC31HJ-100X	CER.CAPACITOR	10p	50V
C26	NCB31CK-473X	CER.CAPACITOR	0.047	16V
C27	NCB31CK-473X	CER.CAPACITOR	0.047	16V
C28	NDC31HJ-101X	CER.CAPACITOR	100p	50V
LC1	EXC-CET471U	LC FILTER		
CN3	QGF0504C1-30X	CONNECTOR	30PIN	
K1	SCV2662-027	FERRITE BEADS	K1,3,4	
SK1	QNV0018-020	IC SOCKET	FOR IC1	

6.3 ISG BOARD ASSEMBLY PARTS LIST [0][3]

SCK2523-02-00A [0][3]□□□□□□

Symbol No.	Part No.	Part Name	Description	
IC2	TC74HC04AF-X	I.C.(M)	TOSHIBA	
IC3	AD8011AR-X	I.C.(M)	ANALOG DEVICES	
IC4	OPA655U-XE	I.C.(M)	BURR BROWN	
IC7	AD603AR-X	I.C.(M)	ANALOG DEVICES	
Q1	2SA1226T2B	TRANSISTOR	NEC	
Q2	3SK157/4-6/-W	FET	NEC	
Q3	3SK157/4-6/-W	FET	NEC	
Q4	3SK157/4-6/-W	FET	NEC	
Q6	3SK157/4-6/-W	FET	NEC	
D1	HSM198S-W	DIODE	HITACHI	
R1	NRSA63D-220X	M.G.RESISTOR	22	1/16W
R2	NRSA63D-332X	M.G.RESISTOR	3.3k	1/16W
R3	NRSA63J-105X	M.G.RESISTOR	1M	1/16W
R4	NRSA63D-332X	M.G.RESISTOR	3.3k	1/16W
R5	NRSA63J-100X	M.G.RESISTOR	10	1/16W
R6	NRSA63J-100X	M.G.RESISTOR	10	1/16W
R7	NRSA63J-100X	M.G.RESISTOR	10	1/16W
R8	NRSA63J-100X	M.G.RESISTOR	10	1/16W
R9	NRSA63J-100X	M.G.RESISTOR	10	1/16W
R13	NRSA63D-221X	M.G.RESISTOR	220	1/16W
R14	NRSA63D-224X	M.G.RESISTOR	220k	1/16W
R15	NRSA63D-152X	M.G.RESISTOR	1.5k	1/16W
R16	NRSA63D-471X	M.G.RESISTOR	470	1/16W
R18	NRSA63D-102X	M.G.RESISTOR	1k	1/16W
R19	NRSA63D-181X	M.G.RESISTOR	180	1/16W
R20	NRSA63D-181X	M.G.RESISTOR	180	1/16W
R21	NRSA63D-101X	M.G.RESISTOR	100	1/16W
R22	NRSA63D-121X	M.G.RESISTOR	120	1/16W
R24	NRSA63D-122X	M.G.RESISTOR	1.2k	1/16W
R25	NRSA63D-152X	M.G.RESISTOR	1.5k	1/16W
R26	NRSA63J-0R0X	M.G.RESISTOR	0	1/16W
R27	NRSA63J-105X	M.G.RESISTOR	1M	1/16W
R30	NRSA63J-105X	M.G.RESISTOR	1M	1/16W
R33	NRSA63D-220X	M.G.RESISTOR	22	1/16W
R34	NRSA63D-102X	M.G.RESISTOR	1k	1/16W
R35	NRSA63D-101X	M.G.RESISTOR	100	1/16W
C1	NBE21AM-106X	TAN.CAPACITOR	10	10V
C2	NBE21AM-106X	TAN.CAPACITOR	10	10V
C3	NBE21EM-105X	TAN.CAPACITOR	1	25V
C6	NBE21CM-225X	TAN.CAPACITOR	2.2	16V
C7	NBE41VM-335X	TAN.CAPACITOR	3.3	35V
C8	NCB31EK-103X	CER.CAPACITOR	0.01	25V
C9	NCB31EK-103X	CER.CAPACITOR	0.01	25V
C10	NCB31CK-473X	CER.CAPACITOR	0.047	16V
C11	NDC31HJ-680X	CER.CAPACITOR	68p	50V
C12	NBE21CM-225X	TAN.CAPACITOR	2.2	16V
C13	NBE21CM-225X	TAN.CAPACITOR	2.2	16V
C14	NDC31HJ-150X	CER.CAPACITOR	15p	50V
C15	NDC31HJ-150X	CER.CAPACITOR	15p	50V
C16	NBE21CM-225X	TAN.CAPACITOR	2.2	16V
C17	NBE21CM-225X	TAN.CAPACITOR	2.2	16V
C19	NBE21CM-225X	TAN.CAPACITOR	2.2	16V
C20	NBE21CM-225X	TAN.CAPACITOR	2.2	16V
C22	NDC31HJ-820X	CER.CAPACITOR	82p	50V
C26	NCB31CK-473X	CER.CAPACITOR	0.047	16V
C27	NCB31CK-473X	CER.CAPACITOR	0.047	16V
C28	NDC31HJ-101X	CER.CAPACITOR	100p	50V
LC1	EXC-CET471U	LC FILTER		
CN4	QGF0503F4-30X	CONNECTOR	30PIN	
K1	SCV2662-027	FERRITE BEADS	K1,3,4	
SK1	QNV0018-020	IC SOCKET	FOR IC1	

6.4 ISR BOARD ASSEMBLY PARTS LIST [0][4]

SCK2523-03-00A [0][4]□□□□□□□

Symbol No.	Part No.	Part Name	Description	
IC2	TC74HC04AF-X	I.C.(M)	TOSHIBA	
IC3	AD8011AR-X	I.C.(M)	ANALOG DEVICES	
IC4	OPA655U-XE	I.C.(M)	BURR BROWN	
IC7	AD603AR-X	I.C.(M)	ANALOG DEVICES	
Q1	2SA1226T2B	TRANSISTOR	NEC	
Q2	3SK157/4-6/-W	FET	NEC	
Q3	3SK157/4-6/-W	FET	NEC	
Q4	3SK157/4-6/-W	FET	NEC	
Q6	3SK157/4-6/-W	FET	NEC	
D1	HSM198S-W	DIODE	HITACHI	
R1	NRSA63D-220X	M.G.RESISTOR	22	1/16W
R2	NRSA63D-332X	M.G.RESISTOR	3.3k	1/16W
R3	NRSA63J-105X	M.G.RESISTOR	1M	1/16W
R4	NRSA63D-332X	M.G.RESISTOR	3.3k	1/16W
R5	NRSA63J-100X	M.G.RESISTOR	10	1/16W
R6	NRSA63J-100X	M.G.RESISTOR	10	1/16W
R7	NRSA63J-100X	M.G.RESISTOR	10	1/16W
R8	NRSA63J-100X	M.G.RESISTOR	10	1/16W
R9	NRSA63J-100X	M.G.RESISTOR	10	1/16W
R13	NRSA63D-221X	M.G.RESISTOR	220	1/16W
R14	NRSA63D-224X	M.G.RESISTOR	220k	1/16W
R15	NRSA63D-152X	M.G.RESISTOR	1.5k	1/16W
R16	NRSA63D-391X	M.G.RESISTOR	390	1/16W
R18	NRSA63D-102X	M.G.RESISTOR	1k	1/16W
R19	NRSA63D-181X	M.G.RESISTOR	180	1/16W
R20	NRSA63D-181X	M.G.RESISTOR	180	1/16W
R21	NRSA63D-101X	M.G.RESISTOR	100	1/16W
R22	NRSA63D-101X	M.G.RESISTOR	100	1/16W
R24	NRSA63D-122X	M.G.RESISTOR	1.2k	1/16W
R25	NRSA63D-222X	M.G.RESISTOR	2.2k	1/16W
R26	NRSA63D-151X	M.G.RESISTOR	150	1/16W
R27	NRSA63J-105X	M.G.RESISTOR	1M	1/16W
R30	NRSA63J-105X	M.G.RESISTOR	1M	1/16W
R33	NRSA63D-220X	M.G.RESISTOR	22	1/16W
R34	NRSA63D-102X	M.G.RESISTOR	1k	1/16W
R35	NRSA63D-101X	M.G.RESISTOR	100	1/16W
C1	NBE21AM-106X	TAN.CAPACITOR	10	10V
C2	NBE21AM-106X	TAN.CAPACITOR	10	10V
C3	NBE21EM-105X	TAN.CAPACITOR	1	25V
C6	NBE21CM-225X	TAN.CAPACITOR	2.2	16V
C7	NBE41VM-335X	TAN.CAPACITOR	3.3	35V
C8	NCB31EK-103X	CER.CAPACITOR	0.01	25V
C9	NCB31EK-103X	CER.CAPACITOR	0.01	25V
C10	NCB31CK-473X	CER.CAPACITOR	0.047	16V
C11	NDC31HJ-680X	CER.CAPACITOR	68p	50V
C12	NBE21CM-225X	TAN.CAPACITOR	2.2	16V
C13	NBE21CM-225X	TAN.CAPACITOR	2.2	16V
C14	NDC31HJ-150X	CER.CAPACITOR	15p	50V
C15	NDC31HJ-150X	CER.CAPACITOR	15p	50V
C16	NBE21CM-225X	TAN.CAPACITOR	2.2	16V
C17	NBE21CM-225X	TAN.CAPACITOR	2.2	16V
C19	NBE21CM-225X	TAN.CAPACITOR	2.2	16V
C20	NBE21CM-225X	TAN.CAPACITOR	2.2	16V
C22	NDC31HJ-820X	CER.CAPACITOR	82p	50V
C25	NDC31HJ-151X	CER.CAPACITOR	150p	50V
C26	NCB31CK-473X	CER.CAPACITOR	0.047	16V
C27	NCB31CK-473X	CER.CAPACITOR	0.047	16V
C28	NDC31HJ-101X	CER.CAPACITOR	100p	50V
LC1	EXC-CET471U	LC FILTER		
CN5	QGF0504C1-30X	CONNECTOR	30PIN	
K1	SCV2662-027	FERRITE BEADS	K1,3,4	
SK1	QNV0018-020	IC SOCKET	FOR IC1	

6.5 CP BOARD ASSEMBLY PARTS LIST [0][5]

SCK2585-01-N0A(U)

SCK2526-01-P1A(E) [0][5]□□□□□□□

Symbol No.	Part No.	Part Name	Description
IC1	MB90T678BPF	I.C.(M)	FUJITSU
IC2	TC74VHC373FT-X	I.C.(M)	TOSHIBA
SK3	SCV2768-001X	IC SOCKET	FOR IC3
IC3	PLSC1238	I.C.(M)	M28F512-12C1 (E)
	PLSC1256	I.C.(M)	M28F512-12C1 (U)
SK4	SCV2768-001X	IC SOCKET	FOR IC4
IC4	PLSC1234	I.C.(M)	MBM29F002T-70PD
IC5	P16V8Z-25-01	I.C.(M)	ADVANCED MICRO
IC6	CY62256LL70SN-X	I.C.(M)	CYPRESS
IC7	UPD71055GB-10	I.C.(M)	NEC
IC8	UPD6453GT-101	I.C.(M)	NEC
IC9	NM93C86AEM8-X	I.C.(M)	NATIONAL SEMICO
IC10	TA75S01F-X	I.C.(M)	TOSHIBA
IC11	M62353GP-X	I.C.(M)	MITSUBISHI
IC12	MN12821-QR-X	I.C.(M)	MATSUSHITA
IC13	MC74HC367F-X	I.C.(M)	MOTOROLA
IC14	TC7W00FU-X	I.C.(M)	TOSHIBA
IC15	TC4053BFT-X	I.C.(M)	TOSHIBA
IC16	NJM2068M-D-X	I.C.(M)	JRC
IC17	NJM2068M-D-X	I.C.(M)	JRC
IC18	TC4W53FU-X	I.C.(M)	TOSHIBA
IC19	TC4W53FU-X	I.C.(M)	TOSHIBA
IC20	TC7SH04FU-X	I.C.(M)	TOSHIBA
IC21	NJM4556AM-X	I.C.(M)	JRC
IC22	TC7W08FU-X	I.C.(M)	TOSHIBA
IC23	TC7W08FU-X	I.C.(M)	TOSHIBA
Q1	DTC124EUA-X	TRANSISTOR	ROHM
Q2	DTA124EUA-X	TRANSISTOR	ROHM
Q3	DTA124EUA-X	TRANSISTOR	ROHM
Q4	DTA124EUA-X	TRANSISTOR	ROHM
Q5	2SD2240/RST/-X	TRANSISTOR	MATSUSHITA
Q6	DTC124EUA-X	TRANSISTOR	ROHM
Q7	DTC124EUA-X	TRANSISTOR	ROHM (E)
Q8	DTC124EUA-X	TRANSISTOR	ROHM
Q9	DTC124EUA-X	TRANSISTOR	ROHM
Q10	2SK662/QR/-X	FET	MATSUSHITA
Q11	2SD601A/QRS/-X	TRANSISTOR	MATSUSHITA
Q12	2SD601A/QRS/-X	TRANSISTOR	MATSUSHITA
Q13	2SB1463/RST/-X	TRANSISTOR	MATSUSHITA (U)
Q14	2SD2240/RST/-X	TRANSISTOR	MATSUSHITA (U)
D2	MA143A-X	DIODE	MATSUSHITA
D3	MA143A-X	DIODE	MATSUSHITA
D4	MA142A-X	DIODE	MATSUSHITA
D5	MA142A-X	DIODE	MATSUSHITA
D6	MA143A-X	DIODE	MATSUSHITA
D7	MA143A-X	DIODE	MATSUSHITA
D8	MA143A-X	DIODE	MATSUSHITA
D9	MA143A-X	DIODE	MATSUSHITA
D11	MA143A-X	DIODE	MATSUSHITA
D12	MA143A-X	DIODE	MATSUSHITA
D13	MA142A-X	DIODE	MATSUSHITA
D200	MA142A-X	DIODE	MATSUSHITA
LD1	GL3HS44	L.E.D.	SHARP
R1	NRSA63D-105X	M.G.RESISTOR	1M 1/16W
R2	NRSA63D-102X	M.G.RESISTOR	1k 1/16W
R3	NRSA63D-105X	M.G.RESISTOR	1M 1/16W (U)
R4	NRSA63D-274X	M.G.RESISTOR	270k 1/16W (U)
R5	NRSA63D-223X	M.G.RESISTOR	22k 1/16W
R6	NRSA63D-223X	M.G.RESISTOR	22k 1/16W
R7	NRSA63D-223X	M.G.RESISTOR	22k 1/16W

Symbol No.	Part No.	Part Name	Description
R8	NRSA63D-104X	M.G.RESISTOR	100k 1/16W
R10	NRSA63D-223X	M.G.RESISTOR	22k 1/16W
R11	NRSA63D-274X	M.G.RESISTOR	270k 1/16W (U)
R12	NRSA63D-473X	M.G.RESISTOR	47k 1/16W (U)
R13	NRSA63D-223X	M.G.RESISTOR	22k 1/16W
R15	NRSA63D-622X	M.G.RESISTOR	6.2k 1/16W
R16	NRSA63D-622X	M.G.RESISTOR	6.2k 1/16W
R17	NRSA63D-223X	M.G.RESISTOR	22k 1/16W
R18	NRSA63D-332X	M.G.RESISTOR	3.3k 1/16W
R19	NRSA63J-0R0X	M.G.RESISTOR	0 1/16W
R20	NRSA63D-101X	M.G.RESISTOR	100 1/16W
R21	NRSA63D-101X	M.G.RESISTOR	100 1/16W
R22	NRSA63D-103X	M.G.RESISTOR	10k 1/16W
R23	NRSA63D-101X	M.G.RESISTOR	100 1/16W
R24	NRSA63D-101X	M.G.RESISTOR	100 1/16W
R25	NRSA63D-681X	M.G.RESISTOR	680 1/16W
R26	NRSA63D-101X	M.G.RESISTOR	100 1/16W
R27	NRSA63D-101X	M.G.RESISTOR	100 1/16W
R28	NRSA63D-101X	M.G.RESISTOR	100 1/16W
R29	NRSA63D-101X	M.G.RESISTOR	100 1/16W
R30	NRSA63D-101X	M.G.RESISTOR	100 1/16W
R31	NRSA63D-101X	M.G.RESISTOR	100 1/16W
R32	NRSA63D-101X	M.G.RESISTOR	100 1/16W
R33	NRSA63D-101X	M.G.RESISTOR	100 1/16W
R34	NRSA63D-473X	M.G.RESISTOR	47k 1/16W (U)
R35	NRSA63D-101X	M.G.RESISTOR	100 1/16W
R36	NRSA63D-101X	M.G.RESISTOR	100 1/16W
R37	NRSA63D-101X	M.G.RESISTOR	100 1/16W
R38	NRSA63D-101X	M.G.RESISTOR	100 1/16W
R39	NRSA63D-101X	M.G.RESISTOR	100 1/16W
R40	NRSA63D-101X	M.G.RESISTOR	100 1/16W
R41	NRSA63D-101X	M.G.RESISTOR	100 1/16W
R42	NRSA63D-101X	M.G.RESISTOR	100 1/16W
R43	NRSA63D-101X	M.G.RESISTOR	100 1/16W
R44	NRSA63D-101X	M.G.RESISTOR	100 1/16W
R45	NRSA63D-101X	M.G.RESISTOR	100 1/16W
R46	NRSA63D-101X	M.G.RESISTOR	100 1/16W
R47	NRSA63D-101X	M.G.RESISTOR	100 1/16W
R48	NRSA63D-392X	M.G.RESISTOR	3.9k 1/16W
R49	NRSA63D-101X	M.G.RESISTOR	100 1/16W
R50	NRSA63D-392X	M.G.RESISTOR	3.9k 1/16W
R51	NRSA63D-101X	M.G.RESISTOR	100 1/16W
R52	NRSA63D-101X	M.G.RESISTOR	100 1/16W
R53	NRSA63D-101X	M.G.RESISTOR	100 1/16W
R54	NRSA63D-101X	M.G.RESISTOR	100 1/16W
R55	NRSA63D-101X	M.G.RESISTOR	100 1/16W
R56	NRSA63D-101X	M.G.RESISTOR	100 1/16W
R57	NRSA63D-124X	M.G.RESISTOR	120k 1/16W
R58	NRSA63D-334X	M.G.RESISTOR	330k 1/16W
R59	NRSA63D-103X	M.G.RESISTOR	10k 1/16W
R60	NRSA63D-104X	M.G.RESISTOR	100k 1/16W
R61	NRSA63D-223X	M.G.RESISTOR	22k 1/16W
R62	NRSA63D-562X	M.G.RESISTOR	5.6k 1/16W
R63	NRSA63D-103X	M.G.RESISTOR	10k 1/16W
R64	NRSA63D-183X	M.G.RESISTOR	18k 1/16W
R65	NRSA63J-0R0X	M.G.RESISTOR	0 1/16W
R66	NRSA63J-0R0X	M.G.RESISTOR	0 1/16W
R67	NRSA63D-223X	M.G.RESISTOR	22k 1/16W
R68	NRSA63D-223X	M.G.RESISTOR	22k 1/16W
R69	NRSA63D-223X	M.G.RESISTOR	22k 1/16W
R70	NRSA63D-223X	M.G.RESISTOR	22k 1/16W
R71	NRSA63D-223X	M.G.RESISTOR	22k 1/16W
R72	NRSA63D-223X	M.G.RESISTOR	22k 1/16W
R73	NRSA63D-223X	M.G.RESISTOR	22k 1/16W
R74	NRSA63D-223X	M.G.RESISTOR	22k 1/16W
R75	NRSA63D-223X	M.G.RESISTOR	22k 1/16W
R76	NRSA63D-223X	M.G.RESISTOR	22k 1/16W
R77	NRSA63D-223X	M.G.RESISTOR	22k 1/16W
R78	NRSA63D-223X	M.G.RESISTOR	22k 1/16W
R79	NRSA63D-223X	M.G.RESISTOR	22k 1/16W
R80	NRSA63D-223X	M.G.RESISTOR	22k 1/16W
R81	NRSA63D-223X	M.G.RESISTOR	22k 1/16W
R82	NRSA63D-223X	M.G.RESISTOR	22k 1/16W

[CP]

Symbol No.	Part No.	Part Name	Description	
R83	NRSA63D-223X	M.G.RESISTOR	22k	1/16W
R84	NRSA63D-223X	M.G.RESISTOR	22k	1/16W
R85	NRSA63D-223X	M.G.RESISTOR	22k	1/16W
R86	NRSA63D-223X	M.G.RESISTOR	22k	1/16W
R87	NRSA63D-223X	M.G.RESISTOR	22k	1/16W
R88	NRSA63D-223X	M.G.RESISTOR	22k	1/16W
R89	NRSA63D-223X	M.G.RESISTOR	22k	1/16W
R90	NRSA63D-223X	M.G.RESISTOR	22k	1/16W
R91	NRSA63D-223X	M.G.RESISTOR	22k	1/16W
R92	NRSA63D-473X	M.G.RESISTOR	47k	1/16W
R93	NRSA63D-473X	M.G.RESISTOR	47k	1/16W
R94	NRSA63D-471X	M.G.RESISTOR	470	1/16W
R95	NRSA63D-473X	M.G.RESISTOR	47k	1/16W
R96	NRSA63D-473X	M.G.RESISTOR	47k	1/16W
R97	NRSA63D-473X	M.G.RESISTOR	47k	1/16W
R98	NRSA63D-473X	M.G.RESISTOR	47k	1/16W
R99	NRSA63D-473X	M.G.RESISTOR	47k	1/16W
R100	NRSA63D-103X	M.G.RESISTOR	10k	1/16W
R101	NRSA63D-103X	M.G.RESISTOR	10k	1/16W
R102	NRSA63D-103X	M.G.RESISTOR	10k	1/16W
R103	NRSA63D-101X	M.G.RESISTOR	100	1/16W
R104	NRSA63D-101X	M.G.RESISTOR	100	1/16W
R105	NRSA63D-101X	M.G.RESISTOR	100	1/16W
R106	NRSA63D-101X	M.G.RESISTOR	100	1/16W
R107	NRSA63D-101X	M.G.RESISTOR	100	1/16W
R108	NRSA02J-682X	M.G.RESISTOR	6.8k	1/10W
R109	NRSA02J-682X	M.G.RESISTOR	6.8k	1/10W
R110	NRSA02J-682X	M.G.RESISTOR	6.8k	1/10W
R111	NRSA02J-682X	M.G.RESISTOR	6.8k	1/10W
R112	NRSA02J-682X	M.G.RESISTOR	6.8k	1/10W
R113	NRSA02J-682X	M.G.RESISTOR	6.8k	1/10W
R114	NRSA02J-682X	M.G.RESISTOR	6.8k	1/10W
R115	NRSA02J-682X	M.G.RESISTOR	6.8k	1/10W
R116	NRSA63D-273X	M.G.RESISTOR	27k	1/16W
R117	NRSA63D-104X	M.G.RESISTOR	100k	1/16W
R118	NRSA63D-202X	M.G.RESISTOR	2k	1/16W
R119	NRSA63D-473X	M.G.RESISTOR	47k	1/16W
R120	NRSA63D-153X	M.G.RESISTOR	15k	1/16W
R121	NRSA63J-0R0X	M.G.RESISTOR	0	1/16W (E)
R122	NRSA63D-104X	M.G.RESISTOR	100k	1/16W
R123	NRSA63D-473X	M.G.RESISTOR	47k	1/16W
R124	NRSA63D-473X	M.G.RESISTOR	47k	1/16W (E)
R125	NRSA63D-223X	M.G.RESISTOR	22k	1/16W
R126	NRSA63D-103X	M.G.RESISTOR	10k	1/16W
R127	NRSA63D-103X	M.G.RESISTOR	10k	1/16W
R128	NRSA63D-222X	M.G.RESISTOR	2.2k	1/16W
R129	NRSA63D-104X	M.G.RESISTOR	100k	1/16W
R130	NRSA63D-104X	M.G.RESISTOR	100k	1/16W
R131	NRSA63D-103X	M.G.RESISTOR	10k	1/16W
R132	NRSA63D-392X	M.G.RESISTOR	3.9k	1/16W
R133	NRSA63D-105X	M.G.RESISTOR	1M	1/16W
R134	NRSA63D-104X	M.G.RESISTOR	100k	1/16W
R135	NRSA63D-222X	M.G.RESISTOR	2.2k	1/16W
R136	NRSA63D-333X	M.G.RESISTOR	33k	1/16W
R137	NRSA63D-124X	M.G.RESISTOR	120k	1/16W
R138	NRSA63D-124X	M.G.RESISTOR	120k	1/16W
R139	NRSA63D-270X	M.G.RESISTOR	27	1/16W
R140	NRSA63D-270X	M.G.RESISTOR	27	1/16W
R141	NRSA63D-122X	M.G.RESISTOR	1.2k	1/16W
R142	NRSA63D-122X	M.G.RESISTOR	1.2k	1/16W
R143	NRSA63D-270X	M.G.RESISTOR	27	1/16W
R144	NRSA63D-270X	M.G.RESISTOR	27	1/16W
R145	NRSA63D-103X	M.G.RESISTOR	10k	1/16W
R146	NRSA63D-103X	M.G.RESISTOR	10k	1/16W
R147	NRSA63D-220X	M.G.RESISTOR	22	1/16W
R148	NRSA63D-220X	M.G.RESISTOR	22	1/16W
R149	NRSA63D-220X	M.G.RESISTOR	22	1/16W
R150	NRSA63D-220X	M.G.RESISTOR	22	1/16W
R151	NRSA63D-220X	M.G.RESISTOR	22	1/16W
R152	NRSA63D-220X	M.G.RESISTOR	22	1/16W
R153	NRSA63D-153X	M.G.RESISTOR	15k	1/16W
R154	NRSA63D-472X	M.G.RESISTOR	4.7k	1/16W
R155	NRSA63D-750X	M.G.RESISTOR	75	1/16W

Symbol No.	Part No.	Part Name	Description	
R156	NRSA63D-680X	M.G.RESISTOR	68	1/16W
R157	NRSA63D-202X	M.G.RESISTOR	2k	1/16W
R158	NRSA63D-472X	M.G.RESISTOR	4.7k	1/16W
R159	NRSA63D-153X	M.G.RESISTOR	15k	1/16W
R160	NRSA63D-153X	M.G.RESISTOR	15k	1/16W
R161	NRSA63D-104X	M.G.RESISTOR	100k	1/16W
R162	NRSA63D-101X	M.G.RESISTOR	100	1/16W
R163	NRSA63D-104X	M.G.RESISTOR	100k	1/16W
R164	NRSA63D-104X	M.G.RESISTOR	100k	1/16W
R165	NRSA63D-473X	M.G.RESISTOR	47k	1/16W
R166	NRSA63D-473X	M.G.RESISTOR	47k	1/16W (E)
R167	NRSA63D-473X	M.G.RESISTOR	47k	1/16W
R170	NRSA63D-560X	M.G.RESISTOR	56	1/16W
R171	NRSA63D-560X	M.G.RESISTOR	56	1/16W
VR1	QVPB609-203Z	TRIM.RESISTOR	20k	H PHASE
VR2	QVPB609-203Z	TRIM.RESISTOR	20k	SC FINE
VR3	QVQ0162-A14	VAL.RESISTOR	10k	MIC R LEV.L
VR4	QVQ0162-A14	VAL.RESISTOR	10k	MIC R LEV.R
VR5	QVQ0162-A14	VAL.RESISTOR	10k	MONITOR
VR6	QVQ0162-A14	VAL.RESISTOR	10k	ALARM
C1	NCB10JM-335X	CER.CAPACITOR	3.3	6.3V
C2	NEH90JM-107X	E.CAPACITOR	100	6.3V
C3	NCB10JM-335X	CER.CAPACITOR	3.3	6.3V
C4	NEH91CM-476X	E.CAPACITOR	47	16V
C6	NEH90JM-107X	E.CAPACITOR	100	6.3V
C7	NEH91CM-476X	E.CAPACITOR	47	16V
C8	NCB10JM-335X	CER.CAPACITOR	3.3	6.3V
C9	NCB10JM-335X	CER.CAPACITOR	3.3	6.3V
C10	NCB31CK-473X	CER.CAPACITOR	0.047	16V
C11	NCB10JM-335X	CER.CAPACITOR	3.3	6.3V
C12	NCB31CK-473X	CER.CAPACITOR	0.047	16V
C13	NCB10JM-335X	CER.CAPACITOR	3.3	6.3V
C14	NCB31CK-473X	CER.CAPACITOR	0.047	16V
C15	NCB10JM-335X	CER.CAPACITOR	3.3	6.3V
C16	NCB31CK-473X	CER.CAPACITOR	0.047	16V
C17	NCB10JM-335X	CER.CAPACITOR	3.3	6.3V
C18	NCB31CK-473X	CER.CAPACITOR	0.047	16V
C19	NCB10JM-335X	CER.CAPACITOR	3.3	6.3V
C20	NCB31CK-473X	CER.CAPACITOR	0.047	16V
C21	NCB10JM-335X	CER.CAPACITOR	3.3	6.3V
C22	NDC31HJ-331X	CER.CAPACITOR	330p	50V
C23	NCB10JM-335X	CER.CAPACITOR	3.3	6.3V
C24	NDC31HJ-101X	CER.CAPACITOR	100p	50V
C25	NCB31CK-473X	CER.CAPACITOR	0.047	16V
C26	NCB31CK-473X	CER.CAPACITOR	0.047	16V
C27	NEH91HM-335X	E.CAPACITOR	3.3	50V
C28	NEH91HM-335X	E.CAPACITOR	3.3	50V
C29	NEH91HM-335X	E.CAPACITOR	3.3	50V
C30	NCB31CK-333X	CER.CAPACITOR	0.033	16V
C31	NCB31CK-333X	CER.CAPACITOR	0.033	16V
C32	NCB10JM-335X	CER.CAPACITOR	3.3	6.3V
C33	NCB10JM-335X	CER.CAPACITOR	3.3	6.3V
C34	NDC21HJ-152X	CER.CAPACITOR	1500p	50V
C35	NEH91AM-336X	E.CAPACITOR	33	10V
C36	NBE21CM-105X	TAN.CAPACITOR	1	16V
C37	NDC31HJ-101X	CER.CAPACITOR	100p	50V
C38	NCB11CK-105X	CER.CAPACITOR	1	16V
C39	NEH91AM-336X	E.CAPACITOR	33	10V
C40	NCB10JM-335X	CER.CAPACITOR	3.3	6.3V
C41	NDC31HJ-331X	CER.CAPACITOR	330p	50V
C42	NDC31HJ-101X	CER.CAPACITOR	100p	50V
C43	NDC31HJ-101X	CER.CAPACITOR	100p	50V
C44	NCB31CK-473X	CER.CAPACITOR	0.047	16V
C45	NCB31CK-473X	CER.CAPACITOR	0.047	16V
C46	NCB31CK-473X	CER.CAPACITOR	0.047	16V
C47	NEH90JM-107X	E.CAPACITOR	100	6.3V
C48	NBE21AM-106X	TAN.CAPACITOR	10	10V
C49	NCB10JM-335X	CER.CAPACITOR	3.3	6.3V
C50	NDC31HJ-221X	CER.CAPACITOR	220p	50V
C51	NCB31CK-473X	CER.CAPACITOR	0.047	16V

6.6 MAIN BOARD ASSEMBLY PARTS LIST [0][6]

SCK2534-U0A(U)

SCK2534-E1A(E) [0][6]□□□□□□

Symbol No.	Part No.	Part Name	Description	
C55	NDC21HJ-152X	CER.CAPACITOR	1500p	50V
C60	NCB31CK-473X	CER.CAPACITOR	0.047	16V
L1	NQL054K-101X	COIL	100uH	
L2	NQL054K-101X	COIL	100uH	
L3	NQL114K-100X	COIL	10uH	
L4	NQL114K-100X	COIL	10uH	
X1	NAX0061-001X	CRYSTAL	4MHz	
S1	SCV2595-008W	DIP SWITCH		
S2	QSW0233-001	ROTARY SWICH	SC COARSE	
S3	NSW0070-002X	SLIDE SWITCH	SHUTTER	
S4	NSW0070-002X	SLIDE SWITCH	IRIS	
S5	NSW0070-002X	SLIDE SWITCH	BLACK	
S6	NSW0070-002X	SLIDE SWITCH	FILE	
S7	NSW0010-001X	SWITCH	FULL AUTO	
S8	NSW0010-001X	SWITCH	LOLUX	
S9	NSW0010-001X	SWITCH	DOWN	
S10	NSW0010-001X	SWITCH	UP	
S11	NSW0010-001X	SWITCH	ITEM	
S12	NSW0010-001X	SWITCH	SET	
S13	NSW0010-001X	SWITCH	MENU	
S14	NSW0018-001X	SLIDE SWITCH	RS-232C/VTR	
CN1	QGA1201F2-04X	CONNECTOR	4PIN	
CN6	QGA1201F2-11X	CONNECTOR	11PIN	
CN8	QGA1201F2-12X	CONNECTOR	12PIN	
CN16	QGA1201F2-15X	CONNECTOR	15PIN	
CN21	QGA1201F2-10X	CONNECTOR	10PIN	
CN26	QGA1201F2-07X	CONNECTOR	7PIN	
CN27	QGA1201F2-04X	CONNECTOR	4PIN	
CN28	QGA1201F2-03X	CONNECTOR	3PIN	
CN29	QGA1201F2-02X	CONNECTOR	2PIN	
CN30	QGF1012F1-10X	CONNECTOR	10PIN	
CN31	QGA1201F2-09X	CONNECTOR	9PIN	
CN32	QGF1012F1-24X	CONNECTOR	24PIN	
CN50	QGA1201F2-06X	CONNECTOR	6PIN	(U)
TP1	NNZ0009-001X	TEST POINT	TP1-24	
K1	SCV2662-027	FERRITE BEADS	K1-7	
K8	NQR0265-001X	FERAITE BEAD	K8-11,19-24	
K12	NRSA63D-392X	M.G.RESISTOR	R200	(U)
K13	NQR0292-001X	FERAITE BEAD	K13-18	
TB1	PGZ02228	EARTH LUG	TB1-3	
SP1	SC43656-015	LED SPACER	FOR LD1	
PW1	SCK2571-01-N2A	AUDIO-SUB BOARD ASSEMBLY		(U)
CN101	QGA1201F2-06X	CONNECTOR	6PIN	(U)

Note: The CP board assembly SCK2585-01-N0A will be changed to include the circuit of AUDIO-SUB board assembly in the future production as below.
DY-90U: XXXXXX53 and after

Symbol No.	Part No.	Part Name	Description	
IC1	NJM2903V-X	I.C.(M)	JRC	
IC101	PLSC1236	I.C.(M)	UPD78P58YGC-3B9	
IC102	SN74LV244APW-X	I.C.(M)	TEXAS	
IC103	SN74CBT3253PW-X	I.C.(M)	TEXAS	
IC104	SN74CBT3345PW-X	I.C.(M)	TEXAS	
IC105	SN74CBT3345PW-X	I.C.(M)	TEXAS	
IC106	TC74VHC174FT-X	I.C.(M)	TOSHIBA	
IC107	TC74VHCT541AFTX	I.C.(M)	TOSHIBA	
IC108	TC7W126FU-X	I.C.(M)	TOSHIBA	
IC109	DS26C32ATM-X	I.C.(M)	NATIONAL SEMICO	
IC110	BU4094BCFV-X	I.C.(M)	ROHM	
IC111	UPC4082G2-X	I.C.(M)	NEC	
IC112	S-81240SGUP-X	I.C.(M)	SEIKO	
IC201	JCL0029	I.C.(M)	JVC	
IC202	DS90LV031TM-X	I.C.(M)	NATIONAL SEMICO	
IC203	TC74VHCT541AFTX	I.C.(M)	TOSHIBA	
IC204	TC7S66FU-X	I.C.(M)	TOSHIBA	
IC205	S-81240SGUP-X	I.C.(M)	SEIKO	
IC206	JCL0030	I.C.(M)	JVC	
IC207	HM538254BTT-7	I.C.(M)	HITACHI	
IC208	SN74CBT3345PW-X	I.C.(M)	TEXAS	
IC209	SN74CBT3345PW-X	I.C.(M)	TEXAS	
IC210	TC74VHCT541AFTX	I.C.(M)	TOSHIBA	
IC211	TC74VHCT541AFTX	I.C.(M)	TOSHIBA	
IC212	SN74CBT3345PW-X	I.C.(M)	TEXAS	
IC213	SN74CBT3345PW-X	I.C.(M)	TEXAS	
IC214	HM538254BTT-7	I.C.(M)	HITACHI	
IC215	DS90LV032TM-X	I.C.(M)	NATIONAL SEMICO	
IC216	L7A1433	I.C.(M)	LSI LOGIC	
IC217	L7A1433	I.C.(M)	LSI LOGIC	
IC218	MN673711	I.C.(M)	MATSUSHITA	
IC219	MN673711	I.C.(M)	MATSUSHITA	
IC220	UPD42S4260ALG5	I.C.(M)	NEC	
IC221	UPD42S4260ALG5	I.C.(M)	NEC	
IC222	S-81224SGUP-X	I.C.(M)	SEIKO	
IC223	S-81224SGUP-X	I.C.(M)	SEIKO	
IC224	JCL0028	I.C.(M)	JVC	
IC225	UPD489001	I.C.(M)	NEC	
IC226	UPD489001	I.C.(M)	NEC	
IC227	UPD489001	I.C.(M)	NEC	
IC228	UPD489001	I.C.(M)	NEC	
IC229	SN74LV125APW-X	I.C.(M)	TEXAS	
IC230	TC74VHC541FT-X	I.C.(M)	TOSHIBA	
IC231	EPM032VT-15-002	I.C.(M)	ALTER	
IC300	AD8011AR-X	I.C.(M)	ANALOG DEVICES	
IC301	LMC6082IM-X	I.C.(M)	NATIONAL SEMICO	
IC302	TDA8766G/C1	I.C.(M)	PHILIPS	
IC303	AD8011AR-X	I.C.(M)	ANALOG DEVICES	
IC304	TDA8766G/C1	I.C.(M)	PHILIPS	
IC305	AD8011AR-X	I.C.(M)	ANALOG DEVICES	
IC306	LMC6082IM-X	I.C.(M)	NATIONAL SEMICO	
IC307	TDA8766G/C1	I.C.(M)	PHILIPS	
IC308	TC74VHC541FT-X	I.C.(M)	TOSHIBA	
IC309	EPF10K20TC144-3	I.C.(M)	ALTER	
IC310	EPF10K10TC144-4	I.C.(M)	ALTER	
IC311	JCS0048	I.C.(M)	JVC	
IC312	MN657021F	I.C.(M)	MATSUSHITA	
IC313	TC4W53FU-X	I.C.(M)	TOSHIBA	
IC314	TC4W53FU-X	I.C.(M)	TOSHIBA	
IC315	S-81233SGUP-X	I.C.(M)	SEIKO	
IC316	S-81233SGUP-X	I.C.(M)	SEIKO	
IC400	OPA658U-XE	I.C.(M)	BURR BROWN	
IC401	AD817AR-X	I.C.(M)	ANALOG DEVICES	
IC402	AD817AR-X	I.C.(M)	ANALOG DEVICES	
IC403	OPA658U-XE	I.C.(M)	BURR BROWN	
IC404	TC7S08FU-X	I.C.(M)	TOSHIBA	
IC405	NJM1496V-X	I.C.(M)	JRC	
IC406	OPA658U-XE	I.C.(M)	BURR BROWN	
IC407	TC7SU04FU-X	I.C.(M)	TOSHIBA	(E)
IC408	NJM1496V-X	I.C.(M)	JRC	
IC409	AD8011AR-X	I.C.(M)	ANALOG DEVICES	
IC410	AD8011AR-X	I.C.(M)	ANALOG DEVICES	
IC411	AD8011AR-X	I.C.(M)	ANALOG DEVICES	

[MAIN]

Symbol No.	Part No.	Part Name	Description
IC412	SN74LV08APW-X	I.C.(M)	TEXAS
IC413	TC4W53FU-X	I.C.(M)	TOSHIBA
IC414	AD817AR-X	I.C.(M)	ANALOG DEVICES
IC415	TC7SU04FU-X	I.C.(M)	TOSHIBA (E)
IC416	TC7SU04FU-X	I.C.(M)	TOSHIBA
IC417	TC4W53FU-X	I.C.(M)	TOSHIBA
IC418	LM1881M-X	I.C.(M)	NATIONAL SEMICO
IC419	AD8011AR-X	I.C.(M)	ANALOG DEVICES
IC420	TC4W53FU-X	I.C.(M)	TOSHIBA
IC421	TC7S14FU-X	I.C.(M)	TOSHIBA
IC422	UPC812G2-X	I.C.(M)	NEC
IC423	TC74HC4538AFS-X	I.C.(M)	TOSHIBA
IC424	AD817AR-X	I.C.(M)	ANALOG DEVICES
IC425	TC74VHC541FT-X	I.C.(M)	TOSHIBA
IC426	JCS0027	I.C.(M)	JVC
IC427	MB88341PFV-X	I.C.(M)	FUJITSU
IC428	TC74VHC157FT-X	I.C.(M)	TOSHIBA
IC429	UPC2384GA	I.C.(M)	NEC
IC430	TC74VHC541FT-X	I.C.(M)	TOSHIBA
IC431	TC4053BFT-X	I.C.(M)	TOSHIBA
IC432	TC7SH86FU-X	I.C.(M)	TOSHIBA
IC433	TC7SU04FU-X	I.C.(M)	TOSHIBA
IC434	TC7W04FU-X	I.C.(M)	TOSHIBA
IC435	MC74HC4046AF-X	I.C.(M)	MOTOROLA
IC436	LMC6082IM-X	I.C.(M)	NATIONAL SEMICO
IC438	S-81250SGUP-X	I.C.(M)	SEIKO
IC440	TC7S08FU-X	I.C.(M)	TOSHIBA
IC700	M65401FP	I.C.(M)	MITSUBISHI
IC701	M52660FP	I.C.(M)	MITSUBISHI
IC702	M65401FP	I.C.(M)	MITSUBISHI
IC703	AK4323VF-X	I.C.(M)	ASAHI KASEI
IC704	SN74LV125APW-X	I.C.(M)	TEXAS
IC705	SN74LV125APW-X	I.C.(M)	TEXAS
IC706	AK5340-VS	I.C.(M)	ASAHI KASEI
IC707	TC74VHCT541AFTX	I.C.(M)	TOSHIBA
IC708	M5278D05	I.C.(M)	MITSUBISHI
IC709	TC4S30F-W	I.C.(M)	TOSHIBA
IC710	S-81224SGUP-X	I.C.(M)	SEIKO
IC711	AK5340-VS	I.C.(M)	ASAHI KASEI
IC712	PCM1710U/G/-XE	I.C.(M)	BURR BROWN
Q1	2SB1219/QR/-X	TRANSISTOR	MATSUSHITA
Q2	DTC144WUA-X	TRANSISTOR	ROHM
Q3	2SD1820/QR/-X	TRANSISTOR	MATSUSHITA
Q4	DTA124EUA-X	TRANSISTOR	ROHM
Q5	2SB1219/QR/-X	TRANSISTOR	MATSUSHITA
Q6	DTC124EUA-X	TRANSISTOR	ROHM
Q101	XN4509-W	TRANSISTOR	MATSUSHITA
Q102	XN6435-X	TRANSISTOR	MATSUSHITA
Q300	MSC3930/B/-X	TRANSISTOR	MOTOROLA
Q301	MSC3930/B/-X	TRANSISTOR	MOTOROLA
Q302	MSC3930/B/-X	TRANSISTOR	MOTOROLA
Q303	2SA1532/BC/-X	TRANSISTOR	MATSUSHITA
Q304	2SA1532/BC/-X	TRANSISTOR	MATSUSHITA
Q305	2SA1532/BC/-X	TRANSISTOR	MATSUSHITA
Q401	2SK663/QR/-X	FET	MATSUSHITA
Q402	2SA1532/BC/-X	TRANSISTOR	MATSUSHITA
Q403	MSC3930/B/-X	TRANSISTOR	MOTOROLA
Q404	MSC3930/B/-X	TRANSISTOR	MOTOROLA
Q405	DTC124EUA-X	TRANSISTOR	ROHM
Q406	DTC124EUA-X	TRANSISTOR	ROHM
Q408	3SK157/4-6/-W	FET	NEC
Q409	2SK663/QR/-X	FET	MATSUSHITA
Q410	MSC3930/B/-X	TRANSISTOR	MOTOROLA
Q411	2SA1532/BC/-X	TRANSISTOR	MATSUSHITA
Q412	MSC3930/B/-X	TRANSISTOR	MOTOROLA
Q413	2SJ364/QR/-X	FET	MATSUSHITA
Q414	DTA124EUA-X	TRANSISTOR	ROHM (U)
Q415	2SA1532/BC/-X	TRANSISTOR	MATSUSHITA
Q416	MSC3930/B/-X	TRANSISTOR	MOTOROLA
Q417	2SA1532/BC/-X	TRANSISTOR	MATSUSHITA
Q418	2SK663/QR/-X	FET	MATSUSHITA

Symbol No.	Part No.	Part Name	Description
Q419	MSC3930/B/-X	TRANSISTOR	MOTOROLA
Q420	2SA1532/BC/-X	TRANSISTOR	MATSUSHITA
Q421	MSC3930/B/-X	TRANSISTOR	MOTOROLA
Q422	2SJ364/QR/-X	FET	MATSUSHITA
Q423	2SA1532/BC/-X	TRANSISTOR	MATSUSHITA
Q424	3SK157/4-6/-W	FET	NEC
Q425	2SA1532/BC/-X	TRANSISTOR	MATSUSHITA
Q426	MSC3930/B/-X	TRANSISTOR	MOTOROLA
Q427	2SA1532/BC/-X	TRANSISTOR	MATSUSHITA
Q428	DTC124EUA-X	TRANSISTOR	ROHM
D1	MA143A-X	DIODE	MATSUSHITA
D2	MA111-X	DIODE	MATSUSHITA
D3	MA142WK-X	DIODE	MATSUSHITA
D4	MA142WA-X	DIODE	MATSUSHITA
D5	MA143A-X	DIODE	MATSUSHITA
D101	DAN202U-X	DIODE	ROHM
D401	SVC341/L/-X	VARI CAP DIODE	SANYO
D402	MA143A-X	DIODE	MATSUSHITA
D403	MA143A-X	DIODE	MATSUSHITA
D405	MA335-X	DIODE	MATSUSHITA
D406	MA335-X	DIODE	MATSUSHITA
D407	MA742-X	DIODE	MATSUSHITA
R1	NRSA63D-103X	M.G.RESISTOR	10k 1/16W
R2	NRSA63D-473X	M.G.RESISTOR	47k 1/16W
R3	NRSA63D-332X	M.G.RESISTOR	3.3k 1/16W
R4	NRSA63D-823X	M.G.RESISTOR	82k 1/16W
R5	NRSA63D-823X	M.G.RESISTOR	82k 1/16W
R6	NRSA63D-103X	M.G.RESISTOR	10k 1/16W
R7	NRSA63D-563X	M.G.RESISTOR	56k 1/16W
R8	NRSA63D-272X	M.G.RESISTOR	2.7k 1/16W
R9	NRSA63D-392X	M.G.RESISTOR	3.9k 1/16W
R10	NRSA63D-392X	M.G.RESISTOR	3.9k 1/16W
R11	NRSA63D-392X	M.G.RESISTOR	3.9k 1/16W
R12	NRSA63D-392X	M.G.RESISTOR	3.9k 1/16W
R13	NRSA63D-333X	M.G.RESISTOR	33k 1/16W
R14	NRSA63D-333X	M.G.RESISTOR	33k 1/16W
R15	NRSA63D-103X	M.G.RESISTOR	10k 1/16W
R16	NRSA63D-101X	M.G.RESISTOR	100 1/16W
R17	NRSA63D-101X	M.G.RESISTOR	100 1/16W
R18	NRSA63D-101X	M.G.RESISTOR	100 1/16W
R19	NRSA63D-101X	M.G.RESISTOR	100 1/16W
R20	NRSA63D-101X	M.G.RESISTOR	100 1/16W
R21	NRSA63D-101X	M.G.RESISTOR	100 1/16W
R22	NRSA63D-101X	M.G.RESISTOR	100 1/16W
R23	NRSA63D-101X	M.G.RESISTOR	100 1/16W
R24	NRSA63D-101X	M.G.RESISTOR	100 1/16W
R25	NRSA63D-101X	M.G.RESISTOR	100 1/16W
R26	NRSA63D-101X	M.G.RESISTOR	100 1/16W
R27	NRSA63D-101X	M.G.RESISTOR	100 1/16W
R28	NRSA63D-101X	M.G.RESISTOR	100 1/16W
R29	NRSA63D-101X	M.G.RESISTOR	100 1/16W
R30	NRSA63D-101X	M.G.RESISTOR	100 1/16W
R31	NRSA63D-101X	M.G.RESISTOR	100 1/16W
R32	NRSA63J-0R0X	M.G.RESISTOR	0 1/16W
R33	NRSA63J-100X	M.G.RESISTOR	10 1/16W
R34	NRSA63D-561X	M.G.RESISTOR	560 1/16W
R35	NRSA63D-222X	M.G.RESISTOR	2.2k 1/16W
R36	NRSA63D-221X	M.G.RESISTOR	220 1/16W
R37	NRSA63D-222X	M.G.RESISTOR	2.2k 1/16W
R38	NRSA63D-221X	M.G.RESISTOR	220 1/16W
R39	NRSA63D-222X	M.G.RESISTOR	2.2k 1/16W
R40	NRSA63D-221X	M.G.RESISTOR	220 1/16W
R41	NRSA63J-0R0X	M.G.RESISTOR	0 1/16W
R43	NRSA63J-105X	M.G.RESISTOR	1M 1/16W
R101	NRSA63D-102X	M.G.RESISTOR	1k 1/16W
R102	NRSA63D-222X	M.G.RESISTOR	2.2k 1/16W
R103	NRSA63D-471X	M.G.RESISTOR	470 1/16W
R104	NRSA63D-222X	M.G.RESISTOR	2.2k 1/16W
R105	NRSA63D-822X	M.G.RESISTOR	8.2k 1/16W
R109	NRSA63D-102X	M.G.RESISTOR	1k 1/16W

Symbol No.	Part No.	Part Name	Description	
R110	NRSA63D-102X	M.G.RESISTOR	1k	1/16W
R111	NRSA63D-472X	M.G.RESISTOR	4.7k	1/16W
R113	NRSA63D-121X	M.G.RESISTOR	120	1/16W
R114	NRSA63D-333X	M.G.RESISTOR	33k	1/16W
R124	NRSA63D-102X	M.G.RESISTOR	1k	1/16W
R125	NRSA63D-101X	M.G.RESISTOR	100	1/16W
R128	NRSA63D-101X	M.G.RESISTOR	100	1/16W
R132	NRSA63D-333X	M.G.RESISTOR	33k	1/16W
R133	NRSA63D-333X	M.G.RESISTOR	33k	1/16W
R134	NRSA63D-333X	M.G.RESISTOR	33k	1/16W
R135	NRSA63D-333X	M.G.RESISTOR	33k	1/16W
R136	NRSA63D-333X	M.G.RESISTOR	33k	1/16W
R138	NRSA63D-562X	M.G.RESISTOR	5.6k	1/16W
R139	NRSA63D-562X	M.G.RESISTOR	5.6k	1/16W
R140	NRSA63D-562X	M.G.RESISTOR	5.6k	1/16W
R141	NRSA63D-562X	M.G.RESISTOR	5.6k	1/16W
R142	NRSA63D-562X	M.G.RESISTOR	5.6k	1/16W
R143	NRSA63D-562X	M.G.RESISTOR	5.6k	1/16W
R144	NRSA63D-103X	M.G.RESISTOR	10k	1/16W
R201	NRSA63J-105X	M.G.RESISTOR	1M	1/16W
R202	NRSA63D-103X	M.G.RESISTOR	10k	1/16W
R206	NRSA63D-222X	M.G.RESISTOR	2.2k	1/16W
R207	NRSA63D-101X	M.G.RESISTOR	100	1/16W
R208	NRSA63D-101X	M.G.RESISTOR	100	1/16W
R209	NRSA63D-101X	M.G.RESISTOR	100	1/16W
R210	NRSA63D-101X	M.G.RESISTOR	100	1/16W
R211	NRSA63D-101X	M.G.RESISTOR	100	1/16W
R212	NRSA63D-101X	M.G.RESISTOR	100	1/16W
R213	NRSA63D-101X	M.G.RESISTOR	100	1/16W
R214	NRSA63D-101X	M.G.RESISTOR	100	1/16W
R215	NRSA63D-101X	M.G.RESISTOR	100	1/16W
R216	NRSA63D-101X	M.G.RESISTOR	100	1/16W
R217	NRSA63D-101X	M.G.RESISTOR	100	1/16W
R218	NRSA63D-101X	M.G.RESISTOR	100	1/16W
R219	NRSA63D-101X	M.G.RESISTOR	100	1/16W
R224	NRSA63D-101X	M.G.RESISTOR	100	1/16W
R225	NRSA63D-101X	M.G.RESISTOR	100	1/16W
R226	NRSA63D-101X	M.G.RESISTOR	100	1/16W
R227	NRSA63D-101X	M.G.RESISTOR	100	1/16W
R228	NRSA63D-101X	M.G.RESISTOR	100	1/16W
R229	NRSA63D-101X	M.G.RESISTOR	100	1/16W
R230	NRSA63D-101X	M.G.RESISTOR	100	1/16W
R231	NRSA63D-101X	M.G.RESISTOR	100	1/16W
R232	NRSA63D-101X	M.G.RESISTOR	100	1/16W
R233	NRSA63D-101X	M.G.RESISTOR	100	1/16W
R234	NRSA63D-101X	M.G.RESISTOR	100	1/16W
R235	NRSA63D-101X	M.G.RESISTOR	100	1/16W
R236	NRSA63D-101X	M.G.RESISTOR	100	1/16W
R237	NRSA63D-101X	M.G.RESISTOR	100	1/16W
R239	NRSA63D-101X	M.G.RESISTOR	100	1/16W
R241	NRSA63D-102X	M.G.RESISTOR	1k	1/16W
R242	NRSA63D-104X	M.G.RESISTOR	100k	1/16W
R243	NRSA63D-101X	M.G.RESISTOR	100	1/16W
R244	NRSA63D-101X	M.G.RESISTOR	100	1/16W
R245	NRSA63D-101X	M.G.RESISTOR	100	1/16W
R246	NRSA63D-101X	M.G.RESISTOR	100	1/16W
R247	NRSA63D-101X	M.G.RESISTOR	100	1/16W
R248	NRSA63D-101X	M.G.RESISTOR	100	1/16W
R249	NRSA63D-101X	M.G.RESISTOR	100	1/16W
R250	NRSA63D-101X	M.G.RESISTOR	100	1/16W
R251	NRSA63D-101X	M.G.RESISTOR	100	1/16W
R252	NRSA63D-101X	M.G.RESISTOR	100	1/16W
R253	NRSA63D-101X	M.G.RESISTOR	100	1/16W
R254	NRSA63D-222X	M.G.RESISTOR	2.2k	1/16W
R255	NRSA63D-332X	M.G.RESISTOR	3.3k	1/16W
R256	NRSA63D-101X	M.G.RESISTOR	100	1/16W
R257	NRSA63D-101X	M.G.RESISTOR	100	1/16W
R258	NRSA63D-101X	M.G.RESISTOR	100	1/16W
R259	NRSA63D-101X	M.G.RESISTOR	100	1/16W
R260	NRSA63D-101X	M.G.RESISTOR	100	1/16W
R261	NRSA63D-101X	M.G.RESISTOR	100	1/16W
R262	NRSA63D-101X	M.G.RESISTOR	100	1/16W

Symbol No.	Part No.	Part Name	Description	
R263	NRSA63D-101X	M.G.RESISTOR	100	1/16W
R266	NRSA63D-101X	M.G.RESISTOR	100	1/16W
R267	NRSA63D-101X	M.G.RESISTOR	100	1/16W
R270	NRSA63D-101X	M.G.RESISTOR	100	1/16W
R271	NRSA63D-101X	M.G.RESISTOR	100	1/16W
R272	NRSA63D-101X	M.G.RESISTOR	100	1/16W
R273	NRSA63J-0R0X	M.G.RESISTOR	0	1/16W (E)
R274	NRSA63D-101X	M.G.RESISTOR	100	1/16W
R275	NRSA63D-101X	M.G.RESISTOR	100	1/16W
R276	NRSA63D-101X	M.G.RESISTOR	100	1/16W
R277	NRSA63D-101X	M.G.RESISTOR	100	1/16W
R278	NRSA63D-101X	M.G.RESISTOR	100	1/16W
R279	NRSA63D-101X	M.G.RESISTOR	100	1/16W
R280	NRSA63D-101X	M.G.RESISTOR	100	1/16W
R281	NRSA63D-101X	M.G.RESISTOR	100	1/16W
R282	NRSA63D-101X	M.G.RESISTOR	100	1/16W
R288	NRSA63D-103X	M.G.RESISTOR	10k	1/16W
R289	NRSA63D-103X	M.G.RESISTOR	10k	1/16W
R290	NRSA63D-103X	M.G.RESISTOR	10k	1/16W
R291	NRSA63D-103X	M.G.RESISTOR	10k	1/16W
R300	NRSA63D-151X	M.G.RESISTOR	150	1/16W
R301	NRSA63D-111X	M.G.RESISTOR	110	1/16W
R302	NRSA63D-221X	M.G.RESISTOR	220	1/16W
R303	NRSA63D-221X	M.G.RESISTOR	220	1/16W
R304	NRSA63D-103X	M.G.RESISTOR	10k	1/16W
R305	NRSA63D-162X	M.G.RESISTOR	1.6k	1/16W
R306	NRSA63D-433X	M.G.RESISTOR	43k	1/16W
R307	NRSA63D-392X	M.G.RESISTOR	3.9k	1/16W
R308	NRSA63D-102X	M.G.RESISTOR	1k	1/16W
R309	NRSA63D-102X	M.G.RESISTOR	1k	1/16W
R310	NRSA63D-101X	M.G.RESISTOR	100	1/16W
R311	NRSA63D-102X	M.G.RESISTOR	1k	1/16W
R312	NRSA63D-103X	M.G.RESISTOR	10k	1/16W
R313	NRSA63D-103X	M.G.RESISTOR	10k	1/16W
R314	NRSA63D-201X	M.G.RESISTOR	200	1/16W
R315	NRSA63D-473X	M.G.RESISTOR	47k	1/16W
R320	NRSA63D-151X	M.G.RESISTOR	150	1/16W
R321	NRSA63D-111X	M.G.RESISTOR	110	1/16W
R322	NRSA63D-221X	M.G.RESISTOR	220	1/16W
R323	NRSA63D-221X	M.G.RESISTOR	220	1/16W
R324	NRSA63D-103X	M.G.RESISTOR	10k	1/16W
R325	NRSA63D-162X	M.G.RESISTOR	1.6k	1/16W
R326	NRSA63D-433X	M.G.RESISTOR	43k	1/16W
R327	NRSA63D-392X	M.G.RESISTOR	3.9k	1/16W
R328	NRSA63D-102X	M.G.RESISTOR	1k	1/16W
R329	NRSA63D-102X	M.G.RESISTOR	1k	1/16W
R330	NRSA63D-101X	M.G.RESISTOR	100	1/16W
R331	NRSA63D-102X	M.G.RESISTOR	1k	1/16W
R332	NRSA63D-103X	M.G.RESISTOR	10k	1/16W
R333	NRSA63D-103X	M.G.RESISTOR	10k	1/16W
R334	NRSA63D-201X	M.G.RESISTOR	200	1/16W
R335	NRSA63D-473X	M.G.RESISTOR	47k	1/16W
R340	NRSA63D-151X	M.G.RESISTOR	150	1/16W
R341	NRSA63D-111X	M.G.RESISTOR	110	1/16W
R342	NRSA63D-221X	M.G.RESISTOR	220	1/16W
R343	NRSA63D-221X	M.G.RESISTOR	220	1/16W
R344	NRSA63D-103X	M.G.RESISTOR	10k	1/16W
R345	NRSA63D-162X	M.G.RESISTOR	1.6k	1/16W
R346	NRSA63D-433X	M.G.RESISTOR	43k	1/16W
R347	NRSA63D-392X	M.G.RESISTOR	3.9k	1/16W
R348	NRSA63D-102X	M.G.RESISTOR	1k	1/16W
R349	NRSA63D-102X	M.G.RESISTOR	1k	1/16W
R350	NRSA63D-101X	M.G.RESISTOR	100	1/16W
R351	NRSA63D-102X	M.G.RESISTOR	1k	1/16W
R352	NRSA63D-103X	M.G.RESISTOR	10k	1/16W
R353	NRSA63D-103X	M.G.RESISTOR	10k	1/16W
R354	NRSA63D-201X	M.G.RESISTOR	200	1/16W
R355	NRSA63J-0R0X	M.G.RESISTOR	0	1/16W
R356	NRSA63J-0R0X	M.G.RESISTOR	0	1/16W
R357	NRSA63J-0R0X	M.G.RESISTOR	0	1/16W
R358	NRSA63J-0R0X	M.G.RESISTOR	0	1/16W
R359	NRSA63D-101X	M.G.RESISTOR	100	1/16W
R363	NRSA63D-103X	M.G.RESISTOR	10k	1/16W

[MAIN]

Symbol No.	Part No.	Part Name	Description	
R365	NRSA63D-102X	M.G.RESISTOR	1k	1/16W
R366	NRSA63D-473X	M.G.RESISTOR	47k	1/16W
R367	NRSA63D-223X	M.G.RESISTOR	22k	1/16W
R368	NRSA63D-223X	M.G.RESISTOR	22k	1/16W
R369	NRSA63D-223X	M.G.RESISTOR	22k	1/16W
R370	NRSA63D-272X	M.G.RESISTOR	2.7k	1/16W
R371	NRSA63D-471X	M.G.RESISTOR	470	1/16W
R372	NRSA63D-471X	M.G.RESISTOR	470	1/16W
R373	NRSA63D-272X	M.G.RESISTOR	2.7k	1/16W
R374	NRSA63D-471X	M.G.RESISTOR	470	1/16W
R375	NRSA63D-471X	M.G.RESISTOR	470	1/16W
R376	NRSA63D-391X	M.G.RESISTOR	390	1/16W
R377	NRSA63D-561X	M.G.RESISTOR	560	1/16W
R378	NRSA63D-472X	M.G.RESISTOR	4.7k	1/16W
R379	NRSA63D-512X	M.G.RESISTOR	5.1k	1/16W
R380	NRSA63D-101X	M.G.RESISTOR	100	1/16W
R381	NRSA63D-391X	M.G.RESISTOR	390	1/16W
R382	NRSA63D-221X	M.G.RESISTOR	220	1/16W
R383	NRSA63D-392X	M.G.RESISTOR	3.9k	1/16W
R384	NRSA63D-391X	M.G.RESISTOR	390	1/16W
R385	NRSA63D-221X	M.G.RESISTOR	220	1/16W
R386	NRSA63D-392X	M.G.RESISTOR	3.9k	1/16W
R387	NRSA63D-391X	M.G.RESISTOR	390	1/16W
R388	NRSA63D-221X	M.G.RESISTOR	220	1/16W
R389	NRSA63D-392X	M.G.RESISTOR	3.9k	1/16W
R390	NRSA63D-103X	M.G.RESISTOR	10k	1/16W
R391	NRSA63D-102X	M.G.RESISTOR	1k	1/16W
R392	NRSA63D-102X	M.G.RESISTOR	1k	1/16W
R393	NRSA63D-102X	M.G.RESISTOR	1k	1/16W
R394	NRSA63D-102X	M.G.RESISTOR	1k	1/16W
R395	NRSA63D-102X	M.G.RESISTOR	1k	1/16W
R396	NRSA63D-103X	M.G.RESISTOR	10k	1/16W
R397	NRSA63D-103X	M.G.RESISTOR	10k	1/16W
R398	NRSA63D-103X	M.G.RESISTOR	10k	1/16W
R399	NRSA63D-103X	M.G.RESISTOR	10k	1/16W
R400	NRSA63D-431X	M.G.RESISTOR	430	1/16W
R401	NRSA63D-681X	M.G.RESISTOR	680	1/16W
R402	NRSA63D-562X	M.G.RESISTOR	5.6k	1/16W
R403	NRSA63D-561X	M.G.RESISTOR	560	1/16W
R404	NRSA63D-271X	M.G.RESISTOR	270	1/16W
R405	NRSA63D-102X	M.G.RESISTOR	1k	1/16W
R406	NRSA63D-331X	M.G.RESISTOR	330	1/16W
R407	NRSA63D-152X	M.G.RESISTOR	1.5k	1/16W
R408	NRSA63D-104X	M.G.RESISTOR	100k	1/16W
R409	NRSA63D-183X	M.G.RESISTOR	18k	1/16W
R410	NRSA63D-472X	M.G.RESISTOR	4.7k	1/16W
R411	NRSA63D-392X	M.G.RESISTOR	3.9k	1/16W
R412	NRSA63D-681X	M.G.RESISTOR	680	1/16W
R413	NRSA63D-123X	M.G.RESISTOR	12k	1/16W (U)
	NRSA63D-113X	M.G.RESISTOR	11k	1/16W (E)
R414	NRSA63D-103X	M.G.RESISTOR	10k	1/16W (U)
	NRSA63D-912X	M.G.RESISTOR	9.1k	1/16W (E)
R415	NRSA63D-392X	M.G.RESISTOR	3.9k	1/16W
R416	NRSA63D-102X	M.G.RESISTOR	1k	1/16W
R417	NRSA63D-471X	M.G.RESISTOR	470	1/16W
R418	NRSA63D-472X	M.G.RESISTOR	4.7k	1/16W
R419	NRSA63D-563X	M.G.RESISTOR	56k	1/16W (U)
	NRSA63D-683X	M.G.RESISTOR	68k	1/16W (E)
R420	NRSA63D-102X	M.G.RESISTOR	1k	1/16W
R421	NRSA63D-331X	M.G.RESISTOR	330	1/16W
R422	NRSA63D-303X	M.G.RESISTOR	30k	1/16W
R423	NRSA63D-564X	M.G.RESISTOR	560k	1/16W (U)
R424	NRSA63D-683X	M.G.RESISTOR	68k	1/16W
R429	NRSA63D-102X	M.G.RESISTOR	1k	1/16W
R430	NRSA63D-102X	M.G.RESISTOR	1k	1/16W
R431	NRSA63D-331X	M.G.RESISTOR	330	1/16W
R432	NRSA63D-332X	M.G.RESISTOR	3.3k	1/16W
R433	NRSA63D-102X	M.G.RESISTOR	1k	1/16W
R434	NRSA02J-750X	M.G.RESISTOR	75	1/10W
R435	NRSA63D-472X	M.G.RESISTOR	4.7k	1/16W
R436	NRSA63D-102X	M.G.RESISTOR	1k	1/16W
R437	NRSA63D-272X	M.G.RESISTOR	2.7k	1/16W
R440	NRSA63D-102X	M.G.RESISTOR	1k	1/16W

Symbol No.	Part No.	Part Name	Description	
R441	NRSA63D-123X	M.G.RESISTOR	12k	1/16W
R442	NRSA63D-152X	M.G.RESISTOR	1.5k	1/16W
R443	NRSA63D-392X	M.G.RESISTOR	3.9k	1/16W
R444	NRSA63D-183X	M.G.RESISTOR	18k	1/16W
R445	NRSA63D-473X	M.G.RESISTOR	47k	1/16W
R446	NRSA63D-102X	M.G.RESISTOR	1k	1/16W
R447	NRSA63D-472X	M.G.RESISTOR	4.7k	1/16W
R448	NRSA63D-271X	M.G.RESISTOR	270	1/16W
R449	NRSA63D-332X	M.G.RESISTOR	3.3k	1/16W
R450	NRSA63D-104X	M.G.RESISTOR	100k	1/16W
R451	NRSA63D-222X	M.G.RESISTOR	2.2k	1/16W
R452	NRSA63D-222X	M.G.RESISTOR	2.2k	1/16W
R453	NRSA63D-472X	M.G.RESISTOR	4.7k	1/16W
R454	NRSA63D-331X	M.G.RESISTOR	330	1/16W
R455	NRSA63D-562X	M.G.RESISTOR	5.6k	1/16W
R456	NRSA63D-222X	M.G.RESISTOR	2.2k	1/16W
R457	NRSA63D-103X	M.G.RESISTOR	10k	1/16W
R458	NRSA63D-752X	M.G.RESISTOR	7.5k	1/16W (U)
	NRSA63D-432X	M.G.RESISTOR	4.3k	1/16W (E)
R459	NRSA63D-822X	M.G.RESISTOR	8.2k	1/16W
R460	NRSA63D-222X	M.G.RESISTOR	2.2k	1/16W
R461	NRSA63D-333X	M.G.RESISTOR	33k	1/16W
R462	NRSA63D-684X	M.G.RESISTOR	680k	1/16W
R464	NRSA63D-152X	M.G.RESISTOR	1.5k	1/16W
R465	NRSA63D-561X	M.G.RESISTOR	560	1/16W
R466	NRSA63D-272X	M.G.RESISTOR	2.7k	1/16W
R467	NRSA63D-681X	M.G.RESISTOR	680	1/16W
R470	NRSA63D-221X	M.G.RESISTOR	220	1/16W
R471	NRSA63J-0R0X	M.G.RESISTOR	0	1/16W
R472	NRSA63D-182X	M.G.RESISTOR	1.8k	1/16W
R480	NRSA63D-102X	M.G.RESISTOR	1k	1/16W
R481	NRSA63D-123X	M.G.RESISTOR	12k	1/16W
R482	NRSA63D-152X	M.G.RESISTOR	1.5k	1/16W
R483	NRSA63D-392X	M.G.RESISTOR	3.9k	1/16W
R484	NRSA63D-183X	M.G.RESISTOR	18k	1/16W
R485	NRSA63D-473X	M.G.RESISTOR	47k	1/16W
R486	NRSA63D-102X	M.G.RESISTOR	1k	1/16W
R487	NRSA63D-472X	M.G.RESISTOR	4.7k	1/16W
R488	NRSA63D-223X	M.G.RESISTOR	22k	1/16W
R489	NRSA63D-102X	M.G.RESISTOR	1k	1/16W
R490	NRSA63D-102X	M.G.RESISTOR	1k	1/16W
R491	NRSA63D-122X	M.G.RESISTOR	1.2k	1/16W
R492	NRSA63D-472X	M.G.RESISTOR	4.7k	1/16W
R493	NRSA63D-181X	M.G.RESISTOR	180	1/16W
R494	NRSA63D-272X	M.G.RESISTOR	2.7k	1/16W
R495	NRSA63D-222X	M.G.RESISTOR	2.2k	1/16W
R496	NRSA63D-271X	M.G.RESISTOR	270	1/16W
R497	NRSA63D-332X	M.G.RESISTOR	3.3k	1/16W
R498	NRSA63D-104X	M.G.RESISTOR	100k	1/16W
R499	NRSA63D-222X	M.G.RESISTOR	2.2k	1/16W
R500	NRSA63D-222X	M.G.RESISTOR	2.2k	1/16W
R501	NRSA63D-472X	M.G.RESISTOR	4.7k	1/16W
R502	NRSA63D-331X	M.G.RESISTOR	330	1/16W
R503	NRSA63D-562X	M.G.RESISTOR	5.6k	1/16W
R504	NRSA63D-222X	M.G.RESISTOR	2.2k	1/16W
R505	NRSA63D-103X	M.G.RESISTOR	10k	1/16W
R506	NRSA63D-562X	M.G.RESISTOR	5.6k	1/16W
R507	NRSA63D-223X	M.G.RESISTOR	22k	1/16W (E)
R508	NRSA63D-472X	M.G.RESISTOR	4.7k	1/16W
R509	NRSA63D-222X	M.G.RESISTOR	2.2k	1/16W
R510	NRSA63D-333X	M.G.RESISTOR	33k	1/16W
R511	NRSA63D-393X	M.G.RESISTOR	39k	1/16W
R512	NRSA63D-393X	M.G.RESISTOR	39k	1/16W
R513	NRSA63D-684X	M.G.RESISTOR	680k	1/16W
R514	NRSA63D-752X	M.G.RESISTOR	7.5k	1/16W
R515	NRSA63D-122X	M.G.RESISTOR	1.2k	1/16W
R516	NRSA63D-561X	M.G.RESISTOR	560	1/16W
R517	NRSA63D-272X	M.G.RESISTOR	2.7k	1/16W
R520	NRSA63D-221X	M.G.RESISTOR	220	1/16W
R521	NRSA63J-0R0X	M.G.RESISTOR	0	1/16W
R522	NRSA63D-182X	M.G.RESISTOR	1.8k	1/16W
R526	NRSA63D-333X	M.G.RESISTOR	33k	1/16W (E)
R529	NRSA63D-223X	M.G.RESISTOR	22k	1/16W

Symbol No.	Part No.	Part Name	Description	
R530	NRSA63D-223X	M.G.RESISTOR	22k	1/16W
R533	NRSA63D-101X	M.G.RESISTOR	100	1/16W
R540	NRSA63D-821X	M.G.RESISTOR	820	1/16W
R541	NRSA63D-122X	M.G.RESISTOR	1.2k	1/16W
R542	NRSA63D-221X	M.G.RESISTOR	220	1/16W
R543	NRSA63D-122X	M.G.RESISTOR	1.2k	1/16W
R544	NRSA63D-102X	M.G.RESISTOR	1k	1/16W
R545	NRSA63D-102X	M.G.RESISTOR	1k	1/16W
R546	NRSA63D-104X	M.G.RESISTOR	100k	1/16W
R547	NRSA63D-153X	M.G.RESISTOR	15k	1/16W
R548	NRSA63D-183X	M.G.RESISTOR	18k	1/16W
R549	NRSA63D-104X	M.G.RESISTOR	100k	1/16W
R550	NRSA63D-152X	M.G.RESISTOR	1.5k	1/16W
R551	NRSA63D-122X	M.G.RESISTOR	1.2k	1/16W (U)
	NRSA63D-681X	M.G.RESISTOR	680	1/16W (E)
R552	NRSA63D-223X	M.G.RESISTOR	22k	1/16W
R553	NRSA63D-223X	M.G.RESISTOR	22k	1/16W
R554	NRSA63D-472X	M.G.RESISTOR	4.7k	1/16W
R555	NRSA63D-102X	M.G.RESISTOR	1k	1/16W
R557	NRSA63D-472X	M.G.RESISTOR	4.7k	1/16W
R558	NRSA63D-102X	M.G.RESISTOR	1k	1/16W
R559	NRSA63D-560X	M.G.RESISTOR	56	1/16W
R560	NRSA63D-101X	M.G.RESISTOR	100	1/16W
R561	NRSA63D-273X	M.G.RESISTOR	27k	1/16W
R562	NRSA63D-332X	M.G.RESISTOR	3.3k	1/16W
R563	NRSA63D-101X	M.G.RESISTOR	100	1/16W
R564	NRSA63D-822X	M.G.RESISTOR	8.2k	1/16W
R565	NRSA63D-103X	M.G.RESISTOR	10k	1/16W
R566	NRSA63D-223X	M.G.RESISTOR	22k	1/16W
R567	NRSA63D-562X	M.G.RESISTOR	5.6k	1/16W
R568	NRSA63D-153X	M.G.RESISTOR	15k	1/16W
R569	NRSA63D-333X	M.G.RESISTOR	33k	1/16W
R570	NRSA63D-223X	M.G.RESISTOR	22k	1/16W
R571	NRSA63D-223X	M.G.RESISTOR	22k	1/16W
R572	NRSA63D-394X	M.G.RESISTOR	390k	1/16W
R573	NRSA63D-564X	M.G.RESISTOR	560k	1/16W
R574	NRSA63D-333X	M.G.RESISTOR	33k	1/16W
R575	NRSA63D-104X	M.G.RESISTOR	100k	1/16W
R576	NRSA63D-104X	M.G.RESISTOR	100k	1/16W
R578	NRSA63D-221X	M.G.RESISTOR	220	1/16W
R579	NRSA63J-105X	M.G.RESISTOR	1M	1/16W
R581	NRSA63D-222X	M.G.RESISTOR	2.2k	1/16W
R582	NRSA63D-122X	M.G.RESISTOR	1.2k	1/16W
R583	NRSA63D-101X	M.G.RESISTOR	100	1/16W
R584	NRSA63D-222X	M.G.RESISTOR	2.2k	1/16W
R585	NRSA63D-331X	M.G.RESISTOR	330	1/16W
R586	NRSA63D-682X	M.G.RESISTOR	6.8k	1/16W
R587	NRSA63D-684X	M.G.RESISTOR	680k	1/16W
R588	NRSA63D-272X	M.G.RESISTOR	2.7k	1/16W
R589	NRSA63D-223X	M.G.RESISTOR	22k	1/16W
R590	NRSA63D-223X	M.G.RESISTOR	22k	1/16W
R591	NRSA63D-472X	M.G.RESISTOR	4.7k	1/16W
R592	NRSA63D-103X	M.G.RESISTOR	10k	1/16W
R593	NRSA63D-102X	M.G.RESISTOR	1k	1/16W
R594	NRSA63D-472X	M.G.RESISTOR	4.7k	1/16W
R595	NRSA63D-273X	M.G.RESISTOR	27k	1/16W
R596	NRSA63D-563X	M.G.RESISTOR	56k	1/16W
R597	NRSA63D-222X	M.G.RESISTOR	2.2k	1/16W
R598	NRSA63D-333X	M.G.RESISTOR	33k	1/16W
R599	NRSA63D-273X	M.G.RESISTOR	27k	1/16W
R600	NRSA63D-104X	M.G.RESISTOR	100k	1/16W
R601	NRSA63D-273X	M.G.RESISTOR	27k	1/16W
R602	NRSA63D-103X	M.G.RESISTOR	10k	1/16W
R603	NRSA63D-153X	M.G.RESISTOR	15k	1/16W
R604	NRSA63D-104X	M.G.RESISTOR	100k	1/16W
R605	NRSA63D-153X	M.G.RESISTOR	15k	1/16W
R606	NRSA63D-104X	M.G.RESISTOR	100k	1/16W
R610	NRSA63D-103X	M.G.RESISTOR	10k	1/16W
R611	NRSA63D-103X	M.G.RESISTOR	10k	1/16W
R612	NRSA63D-103X	M.G.RESISTOR	10k	1/16W
R624	NRSA63D-101X	M.G.RESISTOR	100	1/16W
R625	NRSA63D-101X	M.G.RESISTOR	100	1/16W
R626	NRSA63D-102X	M.G.RESISTOR	1k	1/16W

Symbol No.	Part No.	Part Name	Description	
R629	NRSA63J-0R0X	M.G.RESISTOR	0	1/16W (U)
R630	NRSA63J-0R0X	M.G.RESISTOR	0	1/16W (E)
R631	NRSA63D-472X	M.G.RESISTOR	4.7k	1/16W
R632	NRSA63D-472X	M.G.RESISTOR	4.7k	1/16W
R633	NRSA63D-101X	M.G.RESISTOR	100	1/16W
R634	NRSA63D-101X	M.G.RESISTOR	100	1/16W
R635	NRSA63D-223X	M.G.RESISTOR	22k	1/16W
R636	NRSA63D-472X	M.G.RESISTOR	4.7k	1/16W
R638	NRSA63D-103X	M.G.RESISTOR	10k	1/16W
R639	NRSA63D-101X	M.G.RESISTOR	100	1/16W
R640	NRSA63J-0R0X	M.G.RESISTOR	0	1/16W
R641	NRSA63D-563X	M.G.RESISTOR	56k	1/16W
R642	NRSA63D-103X	M.G.RESISTOR	10k	1/16W
R643	NRSA63D-103X	M.G.RESISTOR	10k	1/16W
R644	NRSA63D-472X	M.G.RESISTOR	4.7k	1/16W
R645	NRSA63D-472X	M.G.RESISTOR	4.7k	1/16W
R646	NRSA63D-101X	M.G.RESISTOR	100	1/16W
R647	NRSA63J-0R0X	M.G.RESISTOR	0	1/16W
R648	NRSA63D-101X	M.G.RESISTOR	100	1/16W
R649	NRSA63D-101X	M.G.RESISTOR	100	1/16W
R650	NRSA63D-101X	M.G.RESISTOR	100	1/16W
R651	NRSA63J-0R0X	M.G.RESISTOR	0	1/16W
R654	NRSA63J-0R0X	M.G.RESISTOR	0	1/16W
R655	NRSA63J-100X	M.G.RESISTOR	10	1/16W
R656	NRSA63D-101X	M.G.RESISTOR	100	1/16W
R700	NRSA63D-103X	M.G.RESISTOR	10k	1/16W
R701	NRSA63D-103X	M.G.RESISTOR	10k	1/16W
R702	NRSA63D-103X	M.G.RESISTOR	10k	1/16W
R703	NRSA63D-103X	M.G.RESISTOR	10k	1/16W
R704	NRSA63D-222X	M.G.RESISTOR	2.2k	1/16W
R705	NRSA63D-681X	M.G.RESISTOR	680	1/16W
R706	NRSA63D-272X	M.G.RESISTOR	2.7k	1/16W
R707	NRSA63D-561X	M.G.RESISTOR	560	1/16W
R708	NRSA63D-391X	M.G.RESISTOR	390	1/16W
R709	NRSA63D-823X	M.G.RESISTOR	82k	1/16W
R710	NRSA63D-333X	M.G.RESISTOR	33k	1/16W
R711	NRSA63D-154X	M.G.RESISTOR	150k	1/16W
R712	NRSA63D-154X	M.G.RESISTOR	150k	1/16W
R713	NRSA63D-392X	M.G.RESISTOR	3.9k	1/16W
R714	NRSA63D-473X	M.G.RESISTOR	47k	1/16W
R715	NRSA63D-101X	M.G.RESISTOR	100	1/16W
R716	NRSA63D-101X	M.G.RESISTOR	100	1/16W
R717	NRSA63D-101X	M.G.RESISTOR	100	1/16W
R720	NRSA63D-471X	M.G.RESISTOR	470	1/16W
R723	NRSA63D-331X	M.G.RESISTOR	330	1/16W
R724	NRSA63D-331X	M.G.RESISTOR	330	1/16W
R725	NRSA63D-331X	M.G.RESISTOR	330	1/16W
R726	NRSA63D-331X	M.G.RESISTOR	330	1/16W
R727	NRSA63J-0R0X	M.G.RESISTOR	0	1/16W
R728	NRSA63D-223X	M.G.RESISTOR	22k	1/16W
R731	NRSA63J-0R0X	M.G.RESISTOR	0	1/16W
R732	NRSA63D-471X	M.G.RESISTOR	470	1/16W
R733	NRSA63D-331X	M.G.RESISTOR	330	1/16W
R734	NRSA63D-331X	M.G.RESISTOR	330	1/16W
R735	NRSA63D-331X	M.G.RESISTOR	330	1/16W
R736	NRSA63D-331X	M.G.RESISTOR	330	1/16W
R737	NRSA63D-101X	M.G.RESISTOR	100	1/16W
R738	NRSA63D-101X	M.G.RESISTOR	100	1/16W
R739	NRSA63D-101X	M.G.RESISTOR	100	1/16W
R740	NRSA63D-101X	M.G.RESISTOR	100	1/16W
R741	NRSA63D-101X	M.G.RESISTOR	100	1/16W
R742	NRSA63D-101X	M.G.RESISTOR	100	1/16W
R745	NRSA63D-101X	M.G.RESISTOR	100	1/16W
R746	NRSA63D-101X	M.G.RESISTOR	100	1/16W
R747	NRSA63D-101X	M.G.RESISTOR	100	1/16W
R748	NRSA63D-101X	M.G.RESISTOR	100	1/16W
R749	NRSA63D-101X	M.G.RESISTOR	100	1/16W
R750	NRSA63D-101X	M.G.RESISTOR	100	1/16W
R751	NRSA63D-103X	M.G.RESISTOR	10k	1/16W
R753	NRSA63D-103X	M.G.RESISTOR	10k	1/16W
R754	NRSA63D-103X	M.G.RESISTOR	10k	1/16W
R755	NRSA63D-103X	M.G.RESISTOR	10k	1/16W
R756	NRSA63D-103X	M.G.RESISTOR	10k	1/16W

[MAIN]

Symbol No.	Part No.	Part Name	Description		
R758	NRSA63D-101X	M.G.RESISTOR	100	1/16W	
R759	NRSA63D-101X	M.G.RESISTOR	100	1/16W	
R760	NRSA63D-101X	M.G.RESISTOR	100	1/16W	
R761	NRSA63D-103X	M.G.RESISTOR	10k	1/16W	
R772	NRSA63D-473X	M.G.RESISTOR	47k	1/16W	
R774	NRSA63J-0R0X	M.G.RESISTOR	0	1/16W	
R775	NRSA63D-470X	M.G.RESISTOR	47	1/16W	
R776	NRSA63D-101X	M.G.RESISTOR	100	1/16W	
R777	NRSA63D-101X	M.G.RESISTOR	100	1/16W	
R778	NRSA63D-101X	M.G.RESISTOR	100	1/16W	
R779	NRSA63D-101X	M.G.RESISTOR	100	1/16W	
R780	NRSA63D-101X	M.G.RESISTOR	100	1/16W	
R781	NRSA63D-101X	M.G.RESISTOR	100	1/16W	
R782	NRSA63D-470X	M.G.RESISTOR	47	1/16W	
R784	NRSA63D-223X	M.G.RESISTOR	22k	1/16W	
R786	NRSA63J-0R0X	M.G.RESISTOR	0	1/16W	
R787	NRSA63J-0R0X	M.G.RESISTOR	0	1/16W	
VR400	NVP1415-102X	TRIM.RESISTOR	1k	Y	
VR401	NVP1415-502X	TRIM.RESISTOR	5k	CHROMA	
C1	NEX21AM-106X	E.CAPACITOR	10	10V	
C2	NEX21AM-106X	E.CAPACITOR	10	10V	
C3	NEX21AM-106X	E.CAPACITOR	10	10V	
C4	NCB11EK-104X	CER.CAPACITOR	0.1	25V	
C5	NEX21AM-106X	E.CAPACITOR	10	10V	
C6	NCB11CK-105X	CER.CAPACITOR	1	16V	
C7	NCB11CK-105X	CER.CAPACITOR	1	16V	
C8	NCB11AK-225X	CER.CAPACITOR	2.2	10V	
C9	NCB10JM-335X	CER.CAPACITOR	3.3	6.3V	
C10	NCB10JM-335X	CER.CAPACITOR	3.3	6.3V	
C11	NBE71VM-106X	TAN.CAPACITOR	10	35V	
C12	NCB31HK-103X	CER.CAPACITOR	0.01	50V	
C13	NCB31HK-103X	CER.CAPACITOR	0.01	50V	
C14	NCB31HK-103X	CER.CAPACITOR	0.01	50V	
C15	NCB31HK-103X	CER.CAPACITOR	0.01	50V	
C16	NDC31HJ-1R0X	CER.CAPACITOR	1p	50V	(E)
C17	NDC31HJ-1R0X	CER.CAPACITOR	1p	50V	(E)
C101	NCB31CK-473X	CER.CAPACITOR	0.047	16V	
C102	NDC31HJ-120X	CER.CAPACITOR	12p	50V	
C103	NCB31HK-103X	CER.CAPACITOR	0.01	50V	
C104	NCB31CK-473X	CER.CAPACITOR	0.047	16V	
C105	NCB31CK-473X	CER.CAPACITOR	0.047	16V	
C106	NDC31HJ-220X	CER.CAPACITOR	22p	50V	
C107	NDC31HJ-220X	CER.CAPACITOR	22p	50V	
C108	NCB31CK-473X	CER.CAPACITOR	0.047	16V	
C109	NCB31CK-473X	CER.CAPACITOR	0.047	16V	
C110	NCB31CK-473X	CER.CAPACITOR	0.047	16V	
C111	NCB31CK-473X	CER.CAPACITOR	0.047	16V	
C112	NCB31CK-473X	CER.CAPACITOR	0.047	16V	
C113	NCB31CK-473X	CER.CAPACITOR	0.047	16V	
C114	NCB31CK-473X	CER.CAPACITOR	0.047	16V	
C115	NCB31CK-473X	CER.CAPACITOR	0.047	16V	
C116	NCB31CK-473X	CER.CAPACITOR	0.047	16V	
C117	NDC31HJ-471X	CER.CAPACITOR	470p	50V	
C118	NCB11CK-105X	CER.CAPACITOR	1	16V	
C120	NCB10JM-335X	CER.CAPACITOR	3.3	6.3V	
C122	NCB31CK-473X	CER.CAPACITOR	0.047	16V	
C123	NCB31CK-473X	CER.CAPACITOR	0.047	16V	
C201	NDC31HJ-180X	CER.CAPACITOR	18p	50V	
C202	NDC31HJ-7R0X	CER.CAPACITOR	7p	50V	
C203	NCB31HK-103X	CER.CAPACITOR	0.01	50V	
C204	NCB10JM-335X	CER.CAPACITOR	3.3	6.3V	
C205	NCB10JM-335X	CER.CAPACITOR	3.3	6.3V	
C207	NCB31CK-473X	CER.CAPACITOR	0.047	16V	
C208	NCB31CK-473X	CER.CAPACITOR	0.047	16V	
C209	NCB31CK-473X	CER.CAPACITOR	0.047	16V	
C210	NCB11CK-105X	CER.CAPACITOR	1	16V	
C211	NCB10JM-335X	CER.CAPACITOR	3.3	6.3V	
C214	NCB10JM-335X	CER.CAPACITOR	3.3	6.3V	
C218	NCB31CK-473X	CER.CAPACITOR	0.047	16V	
C219	NCB31CK-473X	CER.CAPACITOR	0.047	16V	

Symbol No.	Part No.	Part Name	Description	
C220	NCB31CK-473X	CER.CAPACITOR	0.047	16V
C221	NCB31CK-473X	CER.CAPACITOR	0.047	16V
C222	NCB31CK-473X	CER.CAPACITOR	0.047	16V
C223	NCB31CK-473X	CER.CAPACITOR	0.047	16V
C224	NCB31CK-473X	CER.CAPACITOR	0.047	16V
C225	NCB31CK-473X	CER.CAPACITOR	0.047	16V
C226	NCB31CK-473X	CER.CAPACITOR	0.047	16V
C227	NCB31CK-473X	CER.CAPACITOR	0.047	16V
C228	NCB31CK-473X	CER.CAPACITOR	0.047	16V
C229	NCB10JM-335X	CER.CAPACITOR	3.3	6.3V
C232	NCB10JM-335X	CER.CAPACITOR	3.3	6.3V
C235	NCB10JM-335X	CER.CAPACITOR	3.3	6.3V
C238	NCB11CK-105X	CER.CAPACITOR	1	16V
C240	NCB10JM-335X	CER.CAPACITOR	3.3	6.3V
C241	NCB10JM-335X	CER.CAPACITOR	3.3	6.3V
C244	NCB11CK-105X	CER.CAPACITOR	1	16V
C246	NCB10JM-335X	CER.CAPACITOR	3.3	6.3V
C247	NCB10JM-335X	CER.CAPACITOR	3.3	6.3V
C250	NDC31HJ-680X	CER.CAPACITOR	68p	50V
C251	NCB31CK-473X	CER.CAPACITOR	0.047	16V
C252	NCB31CK-473X	CER.CAPACITOR	0.047	16V
C253	NCB31CK-473X	CER.CAPACITOR	0.047	16V
C254	NCB31CK-473X	CER.CAPACITOR	0.047	16V
C255	NCB31CK-473X	CER.CAPACITOR	0.047	16V
C256	NCB10JM-335X	CER.CAPACITOR	3.3	6.3V
C259	NCB31CK-473X	CER.CAPACITOR	0.047	16V
C300	NCB11CK-105X	CER.CAPACITOR	1	16V
C301	NCB11CK-105X	CER.CAPACITOR	1	16V
C302	NCB11CK-105X	CER.CAPACITOR	1	16V
C303	NCB11CK-105X	CER.CAPACITOR	1	16V
C304	NCB31CK-473X	CER.CAPACITOR	0.047	16V
C305	NCB31CK-473X	CER.CAPACITOR	0.047	16V
C306	NCB31CK-473X	CER.CAPACITOR	0.047	16V
C307	NCB31CK-473X	CER.CAPACITOR	0.047	16V
C308	NCB11CK-105X	CER.CAPACITOR	1	16V
C309	NCB11CK-105X	CER.CAPACITOR	1	16V
C310	NCB11CK-105X	CER.CAPACITOR	1	16V
C311	NCB11CK-105X	CER.CAPACITOR	1	16V
C312	NCB11CK-105X	CER.CAPACITOR	1	16V
C313	NCB11CK-105X	CER.CAPACITOR	1	16V
C314	NCB31CK-473X	CER.CAPACITOR	0.047	16V
C315	NCB31CK-473X	CER.CAPACITOR	0.047	16V
C316	NCB31CK-473X	CER.CAPACITOR	0.047	16V
C317	NCB31CK-473X	CER.CAPACITOR	0.047	16V
C318	NCB31CK-473X	CER.CAPACITOR	0.047	16V
C319	NCB31CK-473X	CER.CAPACITOR	0.047	16V
C320	NCB11CK-105X	CER.CAPACITOR	1	16V
C321	NCB11CK-105X	CER.CAPACITOR	1	16V
C322	NCB11CK-105X	CER.CAPACITOR	1	16V
C323	NCB11CK-105X	CER.CAPACITOR	1	16V
C324	NCB11CK-105X	CER.CAPACITOR	1	16V
C325	NCB11CK-105X	CER.CAPACITOR	1	16V
C326	NCB31CK-473X	CER.CAPACITOR	0.047	16V
C327	NCB31CK-473X	CER.CAPACITOR	0.047	16V
C328	NCB31CK-473X	CER.CAPACITOR	0.047	16V
C329	NCB31CK-473X	CER.CAPACITOR	0.047	16V
C330	NCB31CK-473X	CER.CAPACITOR	0.047	16V
C331	NCB31CK-473X	CER.CAPACITOR	0.047	16V
C332	NCB11CK-105X	CER.CAPACITOR	1	16V
C333	NCB11CK-105X	CER.CAPACITOR	1	16V
C334	NCB31CK-473X	CER.CAPACITOR	0.047	16V
C335	NCB10JM-335X	CER.CAPACITOR	3.3	6.3V
C336	NCB10JM-335X	CER.CAPACITOR	3.3	6.3V
C339	NCB10JM-335X	CER.CAPACITOR	3.3	6.3V
C340	NCB10JM-335X	CER.CAPACITOR	3.3	6.3V
C344	NCB10JM-335X	CER.CAPACITOR	3.3	6.3V
C345	NCB10JM-335X	CER.CAPACITOR	3.3	6.3V
C348	NCB31CK-473X	CER.CAPACITOR	0.047	16V
C349	NCB31CK-473X	CER.CAPACITOR	0.047	16V
C350	NCB11CK-105X	CER.CAPACITOR	1	16V
C351	NCB10JM-335X	CER.CAPACITOR	3.3	6.3V
C352	NCB31CK-473X	CER.CAPACITOR	0.047	16V
C353	NCB31CK-473X	CER.CAPACITOR	0.047	16V

Symbol No.	Part No.	Part Name	Description
C354	NCB31CK-473X	CER.CAPACITOR	0.047 16V
C355	NCB11CK-105X	CER.CAPACITOR	1 16V
C356	NCB31CK-473X	CER.CAPACITOR	0.047 16V
C357	NCB11CK-105X	CER.CAPACITOR	1 16V
C358	NCB10JM-335X	CER.CAPACITOR	3.3 6.3V
C359	NDC31HJ-220X	CER.CAPACITOR	22p 50V
C360	NDC31HJ-220X	CER.CAPACITOR	22p 50V
C361	NDC31HJ-220X	CER.CAPACITOR	22p 50V
C362	NCB31CK-473X	CER.CAPACITOR	0.047 16V
C363	NBE51AM-476X	TAN.CAPACITOR	47 10V
C365	NEH90GM-227X	E.CAPACITOR	220
C366	NEH90GM-227X	E.CAPACITOR	220
C367	NCB31CK-473X	CER.CAPACITOR	0.047 16V
C368	NDC31HJ-101X	CER.CAPACITOR	100p 50V
C400	NCB31CK-473X	CER.CAPACITOR	0.047 16V
C401	NCB31CK-473X	CER.CAPACITOR	0.047 16V
C402	NDC31HJ-680X	CER.CAPACITOR	68p 50V
C403	NDC31HJ-180X	CER.CAPACITOR	18p 50V
C405	NCB31CK-473X	CER.CAPACITOR	0.047 16V
C406	NCB31CK-473X	CER.CAPACITOR	0.047 16V
C408	NBE41CM-106X	TAN.CAPACITOR	10 16V
C409	NBE41CM-106X	TAN.CAPACITOR	10 16V
C410	NCB31CK-473X	CER.CAPACITOR	0.047 16V
C411	NCB31CK-473X	CER.CAPACITOR	0.047 16V
C412	NDC31HJ-220X	CER.CAPACITOR	22p 50V
C413	NDC31HJ-470X	CER.CAPACITOR	47p 50V
C414	NDC31HJ-470X	CER.CAPACITOR	47p 50V
C415	NBE21VM-224X	TAN.CAPACITOR	0.22 35V
C416	NCB31CK-473X	CER.CAPACITOR	0.047 16V
C417	NCB31HK-103X	CER.CAPACITOR	0.01 50V
C418	NCB31CK-473X	CER.CAPACITOR	0.047 16V
C419	NCB31CK-473X	CER.CAPACITOR	0.047 16V
C420	NCB31HK-103X	CER.CAPACITOR	0.01 50V
C421	NCB31CK-473X	CER.CAPACITOR	0.047 16V
C422	NCB31CK-473X	CER.CAPACITOR	0.047 16V
C423	NDC31HJ-220X	CER.CAPACITOR	22p 50V (U)
	NDC31HJ-270X	CER.CAPACITOR	27p 50V (E)
C424	NDC31HJ-180X	CER.CAPACITOR	18p 50V (U)
	NDC31HJ-270X	CER.CAPACITOR	27p 50V (E)
C425	NDC31HJ-220X	CER.CAPACITOR	22p 50V
C426	NDC31HJ-470X	CER.CAPACITOR	47p 50V
C427	NDC31HJ-470X	CER.CAPACITOR	47p 50V (E)
C428	NBE21VM-224X	TAN.CAPACITOR	0.22 35V
C429	NCB31CK-473X	CER.CAPACITOR	0.047 16V
C430	NCB31CK-473X	CER.CAPACITOR	0.047 16V
C431	NDC31HJ-6R0X	CER.CAPACITOR	6p 50V (U)
C432	NCB31HK-103X	CER.CAPACITOR	0.01 50V
C433	NCB31CK-473X	CER.CAPACITOR	0.047 16V
C434	NCB31HK-103X	CER.CAPACITOR	0.01 50V
C435	NCB31HK-103X	CER.CAPACITOR	0.01 50V
C436	NCB31CK-473X	CER.CAPACITOR	0.047 16V
C437	NCB31CK-473X	CER.CAPACITOR	0.047 16V
C438	NCB31CK-473X	CER.CAPACITOR	0.047 16V
C439	NDC31HJ-220X	CER.CAPACITOR	22p 50V (U)
	NDC31HJ-150X	CER.CAPACITOR	15p 50V (E)
C440	NCB31CK-473X	CER.CAPACITOR	0.047 16V
C441	NCB31CK-473X	CER.CAPACITOR	0.047 16V
C442	NCB31CK-473X	CER.CAPACITOR	0.047 16V
C443	NCB31CK-473X	CER.CAPACITOR	0.047 16V
C444	NCB31CK-473X	CER.CAPACITOR	0.047 16V
C445	NCB31CK-473X	CER.CAPACITOR	0.047 16V
C446	NCB31CK-473X	CER.CAPACITOR	0.047 16V
C447	NDC31HJ-100X	CER.CAPACITOR	10p 50V
C448	NCB31CK-473X	CER.CAPACITOR	0.047 16V
C449	NCB31CK-473X	CER.CAPACITOR	0.047 16V
C450	NCB31CK-473X	CER.CAPACITOR	0.047 16V
C451	NCB31HK-222X	CER.CAPACITOR	2200p 50V
C452	NCB31HK-222X	CER.CAPACITOR	2200p 50V
C453	NCB11CK-105X	CER.CAPACITOR	1 16V
C454	NCB31HK-103X	CER.CAPACITOR	0.01 50V
C455	NCB31HK-103X	CER.CAPACITOR	0.01 50V
C460	NDC31HJ-270X	CER.CAPACITOR	27p 50V (U)
	NDC31HJ-180X	CER.CAPACITOR	18p 50V (E)

Symbol No.	Part No.	Part Name	Description
C461	NCB31EK-473X	CER.CAPACITOR	0.047 25V
C462	NCB31EK-473X	CER.CAPACITOR	0.047 25V
C463	NDC31HJ-560X	CER.CAPACITOR	56p 50V
C464	NCB31CK-473X	CER.CAPACITOR	0.047 16V
C465	NCB31CK-473X	CER.CAPACITOR	0.047 16V
C466	NCB10JM-335X	CER.CAPACITOR	3.3 6.3V
C467	NDC31HJ-151X	CER.CAPACITOR	150p 50V (U
	NDC31HJ-121X	CER.CAPACITOR	120p 50V (E
C468	NCB31CK-473X	CER.CAPACITOR	0.047 16V
C469	NCB31CK-473X	CER.CAPACITOR	0.047 16V
C470	NCB31CK-473X	CER.CAPACITOR	0.047 16V
C471	NCB31CK-473X	CER.CAPACITOR	0.047 16V
C472	NCB31CK-473X	CER.CAPACITOR	0.047 16V
C473	NDC31HJ-101X	CER.CAPACITOR	100p 50V (E
C474	NCB31CK-473X	CER.CAPACITOR	0.047 16V
C475	NCB10JM-335X	CER.CAPACITOR	3.3 6.3V
C476	NCB11CK-105X	CER.CAPACITOR	1 16V
C477	NCB31CK-473X	CER.CAPACITOR	0.047 16V
C480	NCB10JM-335X	CER.CAPACITOR	3.3 6.3V
C481	NCB31CK-473X	CER.CAPACITOR	0.047 16V
C482	NCB31CK-473X	CER.CAPACITOR	0.047 16V
C483	NCB31CK-473X	CER.CAPACITOR	0.047 16V
C491	NBE21EM-474X	TAN.CAPACITOR	0.47 25V
C492	NCB31CK-473X	CER.CAPACITOR	0.047 16V
C493	NCB31CK-473X	CER.CAPACITOR	0.047 16V
C494	NCB31CK-473X	CER.CAPACITOR	0.047 16V
C495	NCB10JM-335X	CER.CAPACITOR	3.3 6.3V
C496	NCB31CK-473X	CER.CAPACITOR	0.047 16V
C498	NCB31CK-104X	CER.CAPACITOR	0.1 16V
C499	NCB31CK-473X	CER.CAPACITOR	0.047 16V
C501	NCB31CK-473X	CER.CAPACITOR	0.047 16V
C502	NDC31HJ-330X	CER.CAPACITOR	33p 50V
C503	NCB31CK-473X	CER.CAPACITOR	0.047 16V
C504	NCB10JM-335X	CER.CAPACITOR	3.3 6.3V
C505	NCB10JM-335X	CER.CAPACITOR	3.3 6.3V
C700	NCB31CK-473X	CER.CAPACITOR	0.047 16V
C701	NCB31CK-473X	CER.CAPACITOR	0.047 16V
C702	NCB31CK-473X	CER.CAPACITOR	0.047 16V
C703	NCB31CK-473X	CER.CAPACITOR	0.047 16V
C704	NCB31CK-473X	CER.CAPACITOR	0.047 16V
C705	NCB31CK-473X	CER.CAPACITOR	0.047 16V
C706	NCB31CK-473X	CER.CAPACITOR	0.047 16V
C707	NCB10JM-335X	CER.CAPACITOR	3.3 6.3V
C709	NEX21AM-106X	E.CAPACITOR	10 10V
C710	NEX21AM-106X	E.CAPACITOR	10 10V
C711	NEX21CM-225X	E.CAPACITOR	2.2 16V
C712	NEX21CM-225X	E.CAPACITOR	2.2 16V
C713	NCB31CK-104X	CER.CAPACITOR	0.1 16V
C714	NCB31HK-682X	CER.CAPACITOR	6800p 50V
C715	NDC31HJ-180X	CER.CAPACITOR	18p 50V
C716	NCB31CK-104X	CER.CAPACITOR	0.1 16V
C717	NCB10JM-335X	CER.CAPACITOR	3.3 6.3V
C718	NCB31HK-103X	CER.CAPACITOR	0.01 50V
C719	NCB31HK-103X	CER.CAPACITOR	0.01 50V
C720	NCB31HK-103X	CER.CAPACITOR	0.01 50V
C721	NCB11CK-105X	CER.CAPACITOR	1 16V
C722	NDC31HJ-180X	CER.CAPACITOR	18p 50V
C723	NDC31HJ-180X	CER.CAPACITOR	18p 50V
C724	NCB31CK-473X	CER.CAPACITOR	0.047 16V
C725	NCB31CK-473X	CER.CAPACITOR	0.047 16V
C726	NCB31CK-473X	CER.CAPACITOR	0.047 16V
C727	NCB31CK-473X	CER.CAPACITOR	0.047 16V
C728	NCB31CK-473X	CER.CAPACITOR	0.047 16V
C729	NCB31CK-473X	CER.CAPACITOR	0.047 16V
C730	NCB31CK-473X	CER.CAPACITOR	0.047 16V
C731	NCB31CK-473X	CER.CAPACITOR	0.047 16V
C732	NCB31CK-473X	CER.CAPACITOR	0.047 16V
C733	NCB10JM-335X	CER.CAPACITOR	3.3 6.3V
C734	NCB31CK-104X	CER.CAPACITOR	0.1 16V
C735	NCB10JM-335X	CER.CAPACITOR	3.3 6.3V
C736	NCB31CK-104X	CER.CAPACITOR	0.1 16V
C737	NCB31CK-104X	CER.CAPACITOR	0.1 16V
C738	NCB10JM-335X	CER.CAPACITOR	3.3 6.3V

[MAIN]

Symbol No.	Part No.	Part Name	Description
C739	NCB31CK-104X	CER.CAPACITOR	0.1 16V
C740	NCB10JM-335X	CER.CAPACITOR	3.3 6.3V
C741	NFV41HJ-152X	FILM CAPACITOR	1500p 50V
C742	NCB31CK-473X	CER.CAPACITOR	0.047 16V
C743	NCB31CK-473X	CER.CAPACITOR	0.047 16V
C744	NCB10JM-335X	CER.CAPACITOR	3.3 6.3V
C745	NCB31CK-104X	CER.CAPACITOR	0.1 16V
C746	NCB10JM-335X	CER.CAPACITOR	3.3 6.3V
C747	NCB31CK-104X	CER.CAPACITOR	0.1 16V
C748	NCB10JM-335X	CER.CAPACITOR	3.3 6.3V
C749	NCB10JM-335X	CER.CAPACITOR	3.3 6.3V
C750	NCB31CK-104X	CER.CAPACITOR	0.1 16V
C751	NFV41HJ-152X	FILM CAPACITOR	1500p 50V
C752	NFV41HJ-152X	FILM CAPACITOR	1500p 50V
C753	NBE41CM-106X	TAN.CAPACITOR	10 16V
C754	NBE41CM-106X	TAN.CAPACITOR	10 16V
C755	NBE41CM-106X	TAN.CAPACITOR	10 16V
C756	NBE41CM-106X	TAN.CAPACITOR	10 16V
C757	NCB11CK-105X	CER.CAPACITOR	1 16V
C758	NCB11CK-105X	CER.CAPACITOR	1 16V
C759	NCB10JM-335X	CER.CAPACITOR	3.3 6.3V
C760	NCB11CK-105X	CER.CAPACITOR	1 16V
C762	NCB11CK-105X	CER.CAPACITOR	1 16V
C764	NCB11CK-105X	CER.CAPACITOR	1 16V
C765	NCB11CK-105X	CER.CAPACITOR	1 16V
C767	NCB11CK-105X	CER.CAPACITOR	1 16V
C769	NCB10JM-335X	CER.CAPACITOR	3.3 6.3V
C771	NCB31CK-473X	CER.CAPACITOR	0.047 16V
C772	NFV41HJ-152X	FILM CAPACITOR	1500p 50V
C773	NCB31CK-104X	CER.CAPACITOR	0.1 16V
C774	NCB10JM-335X	CER.CAPACITOR	3.3 6.3V
C775	NCB10JM-335X	CER.CAPACITOR	3.3 6.3V
C776	NCB31CK-104X	CER.CAPACITOR	0.1 16V
C777	NCB31CK-104X	CER.CAPACITOR	0.1 16V
C778	NCB10JM-335X	CER.CAPACITOR	3.3 6.3V
C779	NCB31CK-104X	CER.CAPACITOR	0.1 16V
C780	NCB10JM-335X	CER.CAPACITOR	3.3 6.3V
C781	NCB31CK-104X	CER.CAPACITOR	0.1 16V
L101	NQL054K-470X	COIL	47uH
L201	NQL054K-1R2X	COIL	1.2uH
L202	NQL054K-1R2X	COIL	1.2uH
L400	NQL054K-120X	COIL	12uH
L700	NQL054K-3R3X	COIL	3.3uH
L701	NQL054K-101X	COIL	100uH
L702	NQL054K-101X	COIL	100uH
LC1	PGZ01972Z	LC FILTER	LC1-202,301
LC300	SCV2906-001X	LC FILTER	
LC400	NQR0234-001X	LC FILTER	LC400,401
LC402	SCV2030-001W	LC FILTER	
LC403	SCV2031-001V	LC FILTER	
LC404	NQR0089-001X	LC FILTER	(U)
	NQR0090-001X	LC FILTER	(E)
LC405	NQR0122-001X	LC FILTER	
LC406	PGZ01972Z	LC FILTER	LC406-410
LC700	SSV3036-12R3Y	LC FILTER	
LC701	PGZ01972Z	LC FILTER	
X101	QAX0328-001X	CRYSTAL	4.9MHz
X201	QAX0031-001	CRYSTAL	49.5MHz
X401	NAX0022-001X	CRYSTAL	14.31818MHz (U)
	NAX0021-001X	CRYSTAL	17.73447MHz (E)
X402	QAX0496-001	CRYSTAL	54MHz
TH700	NAD0001-103X	THERMISTOR	10k
S201	NSW0022-002X	DIP SW	
CN1	QGA1201F2-06X	CONNECTOR	6PIN

Symbol No.	Part No.	Part Name	Description
CN14	QGA1201F2-14X	CONNECTOR	14PIN
CN32	QGF1012F1-24X	CONNECTOR	24PIN
CN43	QGF1012F1-18X	CONNECTOR	18PIN
CN44	QGF1012F1-14X	CONNECTOR	14PIN
CN45	QGA1201F2-04X	CONNECTOR	4PIN
CN46	SCV2850-040X	CONNECTOR	40PIN
CN56	SSV2615-28	CONNECTOR	28PIN
CN58	QGA1201F2-03X	CONNECTOR	3PIN
CN59	QGA1201F2-03X	CONNECTOR	3PIN
CN60	QGA1201F2-02X	CONNECTOR	2PIN
TP1	NNZ0009-001X	TEST POINT	TP1-403
FL300	NQR0206-001	FL FILTER	
FL301	NQR0206-001	FL FILTER	
FL302	NQR0206-001	FL FILTER	
FL400	NQR0207-001	FL FILTER	
FL401	NQR0208-001	FL FILTER	
K1	SCV2662-027	FERRITE BEADS	K1-3,7,8
K4	NRSA02J-0R0X	M.G.RESISTOR	0 1/10W
K7	SCV2662-027	FERRITE BEADS	K7,8,200-701 (E)
K9	PGZ00354	FERRATE BEADS	K9,11
K200	SCV2662-027	FERRITE BEADS	K200-701 (U)
TB1	NNZ0006-001X	EARTH TERMINAL	TB1,2
SL1	SC32250-001	SHIELD PLATE	
SP1	SSV1568-105	FELT SPACER	FOR X402

6.7 SS/RFP BOARD ASSEMBLY PARTS LIST [0][7]

SCK2538-00A [0][7]□□□□□□□

Symbol No.	Part No.	Part Name	Description
IC101	CLC452AJM5-X	I.C.(M)	NATIONAL SEMICO
IC102	CLC452AJM5-X	I.C.(M)	NATIONAL SEMICO
IC151	UPC29M05T-X	I.C.(M)	NEC
IC152	MC33269DR2-3.3	I.C.(M)	MOTOROLA
IC201	CLC452AJM5-X	I.C.(M)	NATIONAL SEMICO
IC202	CLC452AJM5-X	I.C.(M)	NATIONAL SEMICO
IC301	AN3740FAP	I.C.(M)	MATSUSHITA
IC302	NJM2902M-X	I.C.(M)	JRC
IC303	CLC450AJM5-X	I.C.(M)	NATIONAL SEMICO
IC304	CLC450AJM5-X	I.C.(M)	NATIONAL SEMICO
IC401	AN3740FAP	I.C.(M)	MATSUSHITA
IC402	NJM2902M-X	I.C.(M)	JRC
IC403	CLC450AJM5-X	I.C.(M)	NATIONAL SEMICO
IC404	CLC450AJM5-X	I.C.(M)	NATIONAL SEMICO
IC501	DS90LV032TM-X	I.C.(M)	NATIONAL SEMICO
IC502	DS90LV031TM-X	I.C.(M)	NATIONAL SEMICO
IC601	SC78148GF-026	I.C.(M)	NEC
IC602	UPD71055GB-10	I.C.(M)	NEC
IC603	PLSC1235	I.C.(M)	MBM29F002T-70PD
SK603	SCV2768-001X	IC SOCKET	FOR IC603
IC604	TC74VHC573FT-X	I.C.(M)	TOSHIBA
IC605	SN74LV138APW-X	I.C.(M)	TEXAS
IC606	NM24C02EM8-X	I.C.(M)	NATIONAL SEMICO
IC607	TC7W126FU-X	I.C.(M)	TOSHIBA
IC608	TC7W74FU-X	I.C.(M)	TOSHIBA
IC609	TC7W74FU-X	I.C.(M)	TOSHIBA
IC610	TC7SH04FU-X	I.C.(M)	TOSHIBA
IC611	TA75W01FU-X	I.C.(M)	TOSHIBA
IC612	TC4W53FU-X	I.C.(M)	TOSHIBA
IC613	TC7SH86FU-X	I.C.(M)	TOSHIBA
IC614	TA75S01F-X	I.C.(M)	TOSHIBA
IC615	BA7043FS-X	I.C.(M)	ROHM
IC616	TC4W53FU-X	I.C.(M)	TOSHIBA
IC617	TC7S14FU-X	I.C.(M)	TOSHIBA
IC618	M66312FP-W	I.C.(M)	MITSUBISHI
IC619	TC7S14FU-X	I.C.(M)	TOSHIBA
IC620	MN12821-QR-X	I.C.(M)	MATSUSHITA
IC621	TC7S14FU-X	I.C.(M)	TOSHIBA
IC622	TC7S14FU-X	I.C.(M)	TOSHIBA
IC623	BA6285FP-X	I.C.(M)	ROHM
IC624	TA75S01F-X	I.C.(M)	TOSHIBA
IC625	TC7SH04FU-X	I.C.(M)	TOSHIBA
IC801	TC4W66FU-X	I.C.(M)	TOSHIBA
IC802	NJM2068V-X	I.C.(M)	JRC
IC803	TA75S393F-W	I.C.(M)	TOSHIBA
IC804	NJM2068V-X	I.C.(M)	JRC
IC805	TA75W393FU-X	I.C.(M)	TOSHIBA
IC806	TC7SH86FU-X	I.C.(M)	TOSHIBA
IC807	TC7SH86FU-X	I.C.(M)	TOSHIBA
IC808	TC7W74FU-X	I.C.(M)	TOSHIBA
IC809	BA6862FS-X	I.C.(M)	ROHM
IC810	TC4W66FU-X	I.C.(M)	TOSHIBA
IC901	MB3782PF-X	I.C.(M)	FUJITSU
IC902	TA75W01FU-X	I.C.(M)	TOSHIBA
Q101	2SC3735/4-5/-X	TRANSISTOR	NEC
Q151	2SA1577/QR/-X	TRANSISTOR	ROHM
Q152	DTC124EUA-X	TRANSISTOR	ROHM
Q153	2SA1577/QR/-X	TRANSISTOR	ROHM
Q154	DTC124EUA-X	TRANSISTOR	ROHM
Q201	2SC3735/4-5/-X	TRANSISTOR	NEC
Q301	2SA1577/QR/-X	TRANSISTOR	ROHM
Q302	2SC3735/4-5/-X	TRANSISTOR	NEC
Q303	DTC124EUA-X	TRANSISTOR	ROHM
Q401	2SA1577/QR/-X	TRANSISTOR	ROHM
Q402	2SC3735/4-5/-X	TRANSISTOR	NEC
Q403	DTC124EUA-X	TRANSISTOR	ROHM
Q601	2SB1073/PQ/-X	TRANSISTOR	MATSUSHITA
Q602	2SB1073/PQ/-X	TRANSISTOR	MATSUSHITA
Q603	DTC124EUA-X	TRANSISTOR	ROHM

Symbol No.	Part No.	Part Name	Description	
Q604	DTC124EUA-X	TRANSISTOR	ROHM	
Q605	2SC4081/QRS/-X	TRANSISTOR	ROHM	
Q606	DTA114EUA-X	TRANSISTOR	ROHM	
Q607	DTC124EUA-X	TRANSISTOR	ROHM	
Q608	2SC2873/Y/-X	TRANSISTOR	TOSHIBA	
Q609	DTC124EUA-X	TRANSISTOR	ROHM	
Q611	DTC124EUA-X	TRANSISTOR	ROHM	
Q612	2SC4097/QR/-X	TRANSISTOR	ROHM	
Q801	DTA114EUA-X	TRANSISTOR	ROHM	
Q802	2SC4081/QRS/-X	TRANSISTOR	ROHM	
Q803	2SC4081/QRS/-X	TRANSISTOR	ROHM	
Q804	DTC124EUA-X	TRANSISTOR	ROHM	
Q805	2SC4081/QRS/-X	TRANSISTOR	ROHM	
Q806	DTA114EUA-X	TRANSISTOR	ROHM	
Q807	2SC4081/QRS/-X	TRANSISTOR	ROHM	
Q808	2SC4081/QRS/-X	TRANSISTOR	ROHM	
Q809	2SB1073/PQ/-X	TRANSISTOR	MATSUSHITA	
Q810	2SB1073/PQ/-X	TRANSISTOR	MATSUSHITA	
Q811	2SB1073/PQ/-X	TRANSISTOR	MATSUSHITA	
Q901	2SJ279S-X	FET	HITACHI	
Q902	2SC4097/QR/-X	TRANSISTOR	ROHM	
Q903	2SA1577/QR/-X	TRANSISTOR	ROHM	
Q904	2SJ279S-X	FET	HITACHI	
Q905	2SC4097/QR/-X	TRANSISTOR	ROHM	
Q906	2SA1577/QR/-X	TRANSISTOR	ROHM	
Q907	2SJ279S-X	FET	HITACHI	
Q908	2SC4097/QR/-X	TRANSISTOR	ROHM	
Q909	2SA1577/QR/-X	TRANSISTOR	ROHM	
D301	DAN202U-X	DIODE	ROHM	
D401	DAN202U-X	DIODE	ROHM	
D601	DAN202U-X	DIODE	ROHM	
D602	MA738-X	DIODE	MATSUSHITA	
D603	DAN202U-X	DIODE	ROHM	
D604	DAN202U-X	DIODE	ROHM	
D605	DAN202U-X	DIODE	ROHM	
D606	MA3120/M/-X	ZENER DIODE	MATSUSHITA	
D607	MA3075/M/-X	ZENER DIODE	MATSUSHITA	
D608	DAN202U-X	DIODE	ROHM	
D609	DAN202U-X	DIODE	ROHM	
D801	DAP202U-X	DIODE	ROHM	
D802	MA3130/M/-X	ZENER DIODE	MATSUSHITA	
D803	DAN202U-X	DIODE	ROHM	
D804	MA3091/M/-X	ZENER DIODE	MATSUSHITA	
D805	MA3020-X	ZENER DIODE	MATSUSHITA	
D901	MA736-X	DIODE	MATSUSHITA	
D902	MA736-X	DIODE	MATSUSHITA	
D903	MA3056/M/-X	DIODE	MATSUSHITA	
D904	MA736-X	DIODE	MATSUSHITA	
R101	NRSA63D-121X	M.G.RESISTOR	120	1/16W
R102	NRSA63D-221X	M.G.RESISTOR	220	1/16W
R103	NRSA63D-222X	M.G.RESISTOR	2.2k	1/16W
R104	NRSA63D-103X	M.G.RESISTOR	10k	1/16W
R105	NRSA63D-103X	M.G.RESISTOR	10k	1/16W
R106	NRSA63D-681X	M.G.RESISTOR	680	1/16W
R107	NRSA63D-562X	M.G.RESISTOR	5.6k	1/16W
R108	NRSA63D-102X	M.G.RESISTOR	1k	1/16W
R109	NRSA63D-471X	M.G.RESISTOR	470	1/16W
R110	NRSA63D-153X	M.G.RESISTOR	15k	1/16W
R111	NRSA63D-682X	M.G.RESISTOR	6.8k	1/16W
R112	NRSA63D-101X	M.G.RESISTOR	100	1/16W
R113	NRSA63D-152X	M.G.RESISTOR	1.5k	1/16W
R114	NRSA63D-220X	M.G.RESISTOR	22	1/16W
R115	NRSA63D-820X	M.G.RESISTOR	82	1/16W
R116	NRSA63D-121X	M.G.RESISTOR	120	1/16W
R117	NRSA63D-221X	M.G.RESISTOR	220	1/16W
R118	NRSA63D-222X	M.G.RESISTOR	2.2k	1/16W
R119	NRSA63D-103X	M.G.RESISTOR	10k	1/16W
R120	NRSA63D-103X	M.G.RESISTOR	10k	1/16W
R121	NRSA63D-101X	M.G.RESISTOR	100	1/16W
R122	NRSA63D-101X	M.G.RESISTOR	100	1/16W

[SS/RFP]

Symbol No.	Part No.	Part Name	Description	
R123	NRSA63D-102X	M.G.RESISTOR	1k	1/16W
R124	NRSA63D-750X	M.G.RESISTOR	75	1/16W
R125	NRSA63D-220X	M.G.RESISTOR	22	1/16W
R151	NRSA63D-152X	M.G.RESISTOR	1.5k	1/16W
R159	NRSA63D-562X	M.G.RESISTOR	5.6k	1/16W
R163	NRSA63D-392X	M.G.RESISTOR	3.9k	1/16W
R165	NRSA63D-222X	M.G.RESISTOR	2.2k	1/16W
R201	NRSA63D-121X	M.G.RESISTOR	120	1/16W
R202	NRSA63D-221X	M.G.RESISTOR	220	1/16W
R203	NRSA63D-222X	M.G.RESISTOR	2.2k	1/16W
R204	NRSA63D-103X	M.G.RESISTOR	10k	1/16W
R205	NRSA63D-103X	M.G.RESISTOR	10k	1/16W
R206	NRSA63D-681X	M.G.RESISTOR	680	1/16W
R207	NRSA63D-562X	M.G.RESISTOR	5.6k	1/16W
R208	NRSA63D-102X	M.G.RESISTOR	1k	1/16W
R209	NRSA63D-471X	M.G.RESISTOR	470	1/16W
R210	NRSA63D-153X	M.G.RESISTOR	15k	1/16W
R211	NRSA63D-682X	M.G.RESISTOR	6.8k	1/16W
R212	NRSA63D-101X	M.G.RESISTOR	100	1/16W
R213	NRSA63D-152X	M.G.RESISTOR	1.5k	1/16W
R214	NRSA63D-220X	M.G.RESISTOR	22	1/16W
R215	NRSA63D-820X	M.G.RESISTOR	82	1/16W
R216	NRSA63D-121X	M.G.RESISTOR	120	1/16W
R217	NRSA63D-221X	M.G.RESISTOR	220	1/16W
R218	NRSA63D-222X	M.G.RESISTOR	2.2k	1/16W
R219	NRSA63D-103X	M.G.RESISTOR	10k	1/16W
R220	NRSA63D-103X	M.G.RESISTOR	10k	1/16W
R221	NRSA63D-101X	M.G.RESISTOR	100	1/16W
R222	NRSA63D-101X	M.G.RESISTOR	100	1/16W
R223	NRSA63D-102X	M.G.RESISTOR	1k	1/16W
R224	NRSA63D-750X	M.G.RESISTOR	75	1/16W
R225	NRSA63D-220X	M.G.RESISTOR	22	1/16W
R303	NRSA63J-100X	M.G.RESISTOR	10	1/16W
R304	NRSA63D-471X	M.G.RESISTOR	470	1/16W
R305	NRSA63D-471X	M.G.RESISTOR	470	1/16W
R306	NRSA63D-332X	M.G.RESISTOR	3.3k	1/16W
R307	NRSA63D-223X	M.G.RESISTOR	22k	1/16W
R308	NRSA63D-153X	M.G.RESISTOR	15k	1/16W
R309	NRSA63D-103X	M.G.RESISTOR	10k	1/16W
R314	NRSA63D-221X	M.G.RESISTOR	220	1/16W
R315	NRSA63D-101X	M.G.RESISTOR	100	1/16W
R316	NRSA63D-680X	M.G.RESISTOR	68	1/16W
R318	NRSA63D-820X	M.G.RESISTOR	82	1/16W
R319	NRSA63D-820X	M.G.RESISTOR	82	1/16W
R320	NRSA63D-103X	M.G.RESISTOR	10k	1/16W
R322	NRSA63D-153X	M.G.RESISTOR	15k	1/16W
R323	NRSA63D-152X	M.G.RESISTOR	1.5k	1/16W
R324	NRSA63D-121X	M.G.RESISTOR	120	1/16W
R325	NRSA63D-680X	M.G.RESISTOR	68	1/16W
R328	NRSA63J-0R0X	M.G.RESISTOR	0	1/16W
R331	NRSA63D-272X	M.G.RESISTOR	2.7k	1/16W
R332	NRSA63D-332X	M.G.RESISTOR	3.3k	1/16W
R333	NRSA63D-822X	M.G.RESISTOR	8.2k	1/16W
R334	NRSA63D-332X	M.G.RESISTOR	3.3k	1/16W
R335	NRSA63D-102X	M.G.RESISTOR	1k	1/16W
R336	NRSA63D-151X	M.G.RESISTOR	150	1/16W
R337	NRSA63D-223X	M.G.RESISTOR	22k	1/16W
R338	NRSA63D-103X	M.G.RESISTOR	10k	1/16W
R339	NRSA63D-103X	M.G.RESISTOR	10k	1/16W
R340	NRSA63D-223X	M.G.RESISTOR	22k	1/16W
R341	NRSA63D-102X	M.G.RESISTOR	1k	1/16W
R342	NRSA63D-103X	M.G.RESISTOR	10k	1/16W
R343	NRSA63D-103X	M.G.RESISTOR	10k	1/16W
R344	NRSA63D-222X	M.G.RESISTOR	2.2k	1/16W
R345	NRSA63D-103X	M.G.RESISTOR	10k	1/16W
R352	NRSA63D-103X	M.G.RESISTOR	10k	1/16W
R353	NRSA63D-222X	M.G.RESISTOR	2.2k	1/16W
R355	NRSA63D-181X	M.G.RESISTOR	180	1/16W
R356	NRSA63D-122X	M.G.RESISTOR	1.2k	1/16W
R357	NRSA63D-181X	M.G.RESISTOR	180	1/16W
R358	NRSA63D-151X	M.G.RESISTOR	150	1/16W
R359	NRSA63D-151X	M.G.RESISTOR	150	1/16W
R360	NRSA63D-562X	M.G.RESISTOR	5.6k	1/16W

Symbol No.	Part No.	Part Name	Description	
R361	NRSA63D-222X	M.G.RESISTOR	2.2k	1/16W
R362	NRSA63D-102X	M.G.RESISTOR	1k	1/16W
R363	NRSA63D-103X	M.G.RESISTOR	10k	1/16W
R364	NRSA63D-103X	M.G.RESISTOR	10k	1/16W
R365	NRSA63D-391X	M.G.RESISTOR	390	1/16W
R370	NRSA63D-562X	M.G.RESISTOR	5.6k	1/16W
R371	NRSA63D-223X	M.G.RESISTOR	22k	1/16W
R403	NRSA63J-100X	M.G.RESISTOR	10	1/16W
R404	NRSA63D-471X	M.G.RESISTOR	470	1/16W
R405	NRSA63D-471X	M.G.RESISTOR	470	1/16W
R406	NRSA63D-332X	M.G.RESISTOR	3.3k	1/16W
R407	NRSA63D-223X	M.G.RESISTOR	22k	1/16W
R408	NRSA63D-153X	M.G.RESISTOR	15k	1/16W
R409	NRSA63D-103X	M.G.RESISTOR	10k	1/16W
R414	NRSA63D-221X	M.G.RESISTOR	220	1/16W
R415	NRSA63D-101X	M.G.RESISTOR	100	1/16W
R416	NRSA63D-680X	M.G.RESISTOR	68	1/16W
R418	NRSA63D-820X	M.G.RESISTOR	82	1/16W
R419	NRSA63D-820X	M.G.RESISTOR	82	1/16W
R420	NRSA63D-103X	M.G.RESISTOR	10k	1/16W
R422	NRSA63D-153X	M.G.RESISTOR	15k	1/16W
R423	NRSA63D-152X	M.G.RESISTOR	1.5k	1/16W
R424	NRSA63D-121X	M.G.RESISTOR	120	1/16W
R425	NRSA63D-680X	M.G.RESISTOR	68	1/16W
R428	NRSA63J-0R0X	M.G.RESISTOR	0	1/16W
R431	NRSA63D-272X	M.G.RESISTOR	2.7k	1/16W
R432	NRSA63D-332X	M.G.RESISTOR	3.3k	1/16W
R433	NRSA63D-822X	M.G.RESISTOR	8.2k	1/16W
R434	NRSA63D-332X	M.G.RESISTOR	3.3k	1/16W
R435	NRSA63D-102X	M.G.RESISTOR	1k	1/16W
R436	NRSA63D-151X	M.G.RESISTOR	150	1/16W
R437	NRSA63D-223X	M.G.RESISTOR	22k	1/16W
R438	NRSA63D-103X	M.G.RESISTOR	10k	1/16W
R439	NRSA63D-103X	M.G.RESISTOR	10k	1/16W
R440	NRSA63D-223X	M.G.RESISTOR	22k	1/16W
R441	NRSA63D-102X	M.G.RESISTOR	1k	1/16W
R442	NRSA63D-103X	M.G.RESISTOR	10k	1/16W
R443	NRSA63D-103X	M.G.RESISTOR	10k	1/16W
R444	NRSA63D-222X	M.G.RESISTOR	2.2k	1/16W
R445	NRSA63D-103X	M.G.RESISTOR	10k	1/16W
R452	NRSA63D-103X	M.G.RESISTOR	10k	1/16W
R453	NRSA63D-222X	M.G.RESISTOR	2.2k	1/16W
R455	NRSA63D-181X	M.G.RESISTOR	180	1/16W
R456	NRSA63D-122X	M.G.RESISTOR	1.2k	1/16W
R457	NRSA63D-181X	M.G.RESISTOR	180	1/16W
R458	NRSA63D-151X	M.G.RESISTOR	150	1/16W
R459	NRSA63D-151X	M.G.RESISTOR	150	1/16W
R460	NRSA63D-562X	M.G.RESISTOR	5.6k	1/16W
R461	NRSA63D-222X	M.G.RESISTOR	2.2k	1/16W
R462	NRSA63D-102X	M.G.RESISTOR	1k	1/16W
R463	NRSA63D-103X	M.G.RESISTOR	10k	1/16W
R464	NRSA63D-103X	M.G.RESISTOR	10k	1/16W
R465	NRSA63D-391X	M.G.RESISTOR	390	1/16W
R470	NRSA63D-562X	M.G.RESISTOR	5.6k	1/16W
R471	NRSA63D-223X	M.G.RESISTOR	22k	1/16W
R501	NRSA63D-101X	M.G.RESISTOR	100	1/16W
R502	NRSA63D-820X	M.G.RESISTOR	82	1/16W
R503	NRSA63J-0R0X	M.G.RESISTOR	0	1/16W
R507	NRSA63D-103X	M.G.RESISTOR	10k	1/16W
R508	NRSA63D-123X	M.G.RESISTOR	12k	1/16W
R515	NRSA63D-562X	M.G.RESISTOR	5.6k	1/16W
R517	NRSA63D-103X	M.G.RESISTOR	10k	1/16W
R519	NRSA63D-820X	M.G.RESISTOR	82	1/16W
R520	NRSA63D-820X	M.G.RESISTOR	82	1/16W
R521	NRSA63D-820X	M.G.RESISTOR	82	1/16W
R522	NRSA63D-820X	M.G.RESISTOR	82	1/16W
R523	NRSA63D-101X	M.G.RESISTOR	100	1/16W
R525	NRSA63D-820X	M.G.RESISTOR	82	1/16W
R528	NRSA63D-820X	M.G.RESISTOR	82	1/16W
R529	NRSA63D-820X	M.G.RESISTOR	82	1/16W
R601	NRSA63D-102X	M.G.RESISTOR	1k	1/16W
R602	NRSA63D-101X	M.G.RESISTOR	100	1/16W
R603	NRSA63D-101X	M.G.RESISTOR	100	1/16W

Symbol No.	Part No.	Part Name	Description	
R604	NRSA63D-101X	M.G.RESISTOR	100	1/16W
R605	NRSA63D-101X	M.G.RESISTOR	100	1/16W
R606	NRSA63J-100X	M.G.RESISTOR	10	1/16W
R607	NRSA63D-473X	M.G.RESISTOR	47k	1/16W
R608	NRSA63D-473X	M.G.RESISTOR	47k	1/16W
R609	NRSA63D-153X	M.G.RESISTOR	15k	1/16W
R610	NRSA63D-393X	M.G.RESISTOR	39k	1/16W
R612	NRS12BJ-101X	M.G.RESISTOR	100	1/2W
R613	NRSA63D-471X	M.G.RESISTOR	470	1/16W
R614	NRSA63D-473X	M.G.RESISTOR	47k	1/16W
R615	NRSA63D-473X	M.G.RESISTOR	47k	1/16W
R616	NRSA63D-473X	M.G.RESISTOR	47k	1/16W
R617	NRSA63D-473X	M.G.RESISTOR	47k	1/16W
R618	NRSA63D-101X	M.G.RESISTOR	100	1/16W
R619	NRSA63D-101X	M.G.RESISTOR	100	1/16W
R620	NRSA63D-101X	M.G.RESISTOR	100	1/16W
R621	NRSA63D-334X	M.G.RESISTOR	330k	1/16W
R622	NRSA63D-334X	M.G.RESISTOR	330k	1/16W
R623	NRSA63D-472X	M.G.RESISTOR	4.7k	1/16W
R624	NRSA63D-102X	M.G.RESISTOR	1k	1/16W
R625	NRSA63D-681X	M.G.RESISTOR	680	1/16W
R626	NRSA63D-821X	M.G.RESISTOR	820	1/16W
R627	NRSA63D-102X	M.G.RESISTOR	1k	1/16W
R628	NRSA63D-561X	M.G.RESISTOR	560	1/16W
R629	NRSA63D-561X	M.G.RESISTOR	560	1/16W
R630	NRSA63D-561X	M.G.RESISTOR	560	1/16W
R631	NRSA63D-561X	M.G.RESISTOR	560	1/16W
R632	NRSA63D-561X	M.G.RESISTOR	560	1/16W
R633	NRSA63D-681X	M.G.RESISTOR	680	1/16W
R634	NRSA63D-334X	M.G.RESISTOR	330k	1/16W
R635	NRSA63D-334X	M.G.RESISTOR	330k	1/16W
R636	NRSA63D-334X	M.G.RESISTOR	330k	1/16W
R637	NRSA63D-821X	M.G.RESISTOR	820	1/16W
R638	NRSA63D-334X	M.G.RESISTOR	330k	1/16W
R639	NRSA63D-102X	M.G.RESISTOR	1k	1/16W
R640	NRSA63D-472X	M.G.RESISTOR	4.7k	1/16W
R641	NRSA63D-102X	M.G.RESISTOR	1k	1/16W
R642	NRSA63D-681X	M.G.RESISTOR	680	1/16W
R643	NRSA63D-473X	M.G.RESISTOR	47k	1/16W
R644	NRSA63D-103X	M.G.RESISTOR	10k	1/16W
R645	NRSA63D-271X	M.G.RESISTOR	270	1/16W
R646	NRSA63D-563X	M.G.RESISTOR	56k	1/16W
R647	NRSA63D-124X	M.G.RESISTOR	120k	1/16W
R648	NRSA63D-563X	M.G.RESISTOR	56k	1/16W
R649	NRSA63D-104X	M.G.RESISTOR	100k	1/16W
R650	NRSA63D-563X	M.G.RESISTOR	56k	1/16W
R652	NRSA63D-104X	M.G.RESISTOR	100k	1/16W
R653	NRSA63D-154X	M.G.RESISTOR	150k	1/16W
R654	NRSA63D-333X	M.G.RESISTOR	33k	1/16W
R655	NRSA63D-393X	M.G.RESISTOR	39k	1/16W
R656	NRSA63D-183X	M.G.RESISTOR	18k	1/16W
R657	NRSA63D-102X	M.G.RESISTOR	1k	1/16W
R658	NRSA63D-102X	M.G.RESISTOR	1k	1/16W
R659	NRSA63D-223X	M.G.RESISTOR	22k	1/16W
R660	NRSA63D-333X	M.G.RESISTOR	33k	1/16W
R661	NRSA63J-105X	M.G.RESISTOR	1M	1/16W
R662	NRSA63D-103X	M.G.RESISTOR	10k	1/16W
R663	NRSA63D-472X	M.G.RESISTOR	4.7k	1/16W
R664	NRSA63D-472X	M.G.RESISTOR	4.7k	1/16W
R665	NRSA63D-472X	M.G.RESISTOR	4.7k	1/16W
R666	NRSA63D-472X	M.G.RESISTOR	4.7k	1/16W
R667	NRSA63D-472X	M.G.RESISTOR	4.7k	1/16W
R668	NRSA63D-222X	M.G.RESISTOR	2.2k	1/16W
R669	NRSA63D-222X	M.G.RESISTOR	2.2k	1/16W
R670	NRSA63D-103X	M.G.RESISTOR	10k	1/16W
R671	NRSA63D-224X	M.G.RESISTOR	220k	1/16W
R672	NRSA63J-4R7X	M.G.RESISTOR	4.7	1/16W
R673	NRSA63D-123X	M.G.RESISTOR	12k	1/16W
R674	NRSA63D-102X	M.G.RESISTOR	1k	1/16W
R675	NRSA63D-104X	M.G.RESISTOR	100k	1/16W
R676	NRS12BJ-680X	M.G.RESISTOR	68	1/2W
R677	NRSA63D-472X	M.G.RESISTOR	4.7k	1/16W

Symbol No.	Part No.	Part Name	Description	
R678	NRSA63D-104X	M.G.RESISTOR	100k	1/16W
R679	NRSA63D-223X	M.G.RESISTOR	22k	1/16W
R680	NRSA63J-105X	M.G.RESISTOR	1M	1/16W
R681	NRSA63D-472X	M.G.RESISTOR	4.7k	1/16W
R682	NRSA63D-121X	M.G.RESISTOR	120	1/16W
R683	NRSA63D-103X	M.G.RESISTOR	10k	1/16W
R684	NRSA63D-104X	M.G.RESISTOR	100k	1/16W
R685	NRSA63D-102X	M.G.RESISTOR	1k	1/16W
R686	NRSA63D-103X	M.G.RESISTOR	10k	1/16W
R687	NRSA63D-223X	M.G.RESISTOR	22k	1/16W
R688	NRSA63D-223X	M.G.RESISTOR	22k	1/16W
R689	NRSA63D-104X	M.G.RESISTOR	100k	1/16W
R690	NRSA63D-332X	M.G.RESISTOR	3.3k	1/16W
R693	NRSA63D-101X	M.G.RESISTOR	100	1/16W
R694	NRSA63D-224X	M.G.RESISTOR	220k	1/16W
R695	NRSA63D-472X	M.G.RESISTOR	4.7k	1/16W
R696	NRSA63D-472X	M.G.RESISTOR	4.7k	1/16W
R697	NRSA63D-681X	M.G.RESISTOR	680	1/16W
R698	NRSA63D-104X	M.G.RESISTOR	100k	1/16W
R699	NRSA63D-333X	M.G.RESISTOR	33k	1/16W
R701	NRSA63D-823X	M.G.RESISTOR	82k	1/16W
R702	NRSA63D-223X	M.G.RESISTOR	22k	1/16W
R703	NRSA63D-273X	M.G.RESISTOR	27k	1/16W
R704	NRSA63D-473X	M.G.RESISTOR	47k	1/16W
R705	NRSA63D-102X	M.G.RESISTOR	1k	1/16W
R706	NRSA63D-224X	M.G.RESISTOR	220k	1/16W
R707	NRSA63D-102X	M.G.RESISTOR	1k	1/16W
R801	NRSA63D-681X	M.G.RESISTOR	680	1/16W
R802	NRSA63D-681X	M.G.RESISTOR	680	1/16W
R803	NRSA63D-561X	M.G.RESISTOR	560	1/16W
R804	NRSA63D-332X	M.G.RESISTOR	3.3k	1/16W
R805	NRSA63D-332X	M.G.RESISTOR	3.3k	1/16W
R806	NRSA63D-564X	M.G.RESISTOR	560k	1/16W
R807	NRSA63J-105X	M.G.RESISTOR	1M	1/16W
R808	NRSA63D-222X	M.G.RESISTOR	2.2k	1/16W
R809	NRSA63D-104X	M.G.RESISTOR	100k	1/16W
R810	NRSA63D-472X	M.G.RESISTOR	4.7k	1/16W
R811	NRSA63D-222X	M.G.RESISTOR	2.2k	1/16W
R812	NRSA63D-394X	M.G.RESISTOR	390k	1/16W
R813	NRSA63D-332X	M.G.RESISTOR	3.3k	1/16W
R814	NRSA63D-103X	M.G.RESISTOR	10k	1/16W
R815	NRSA63D-103X	M.G.RESISTOR	10k	1/16W
R816	NRSA63J-100X	M.G.RESISTOR	10	1/16W
R817	NRSA63D-103X	M.G.RESISTOR	10k	1/16W
R818	NRSA63D-103X	M.G.RESISTOR	10k	1/16W
R819	NRSA63D-103X	M.G.RESISTOR	10k	1/16W
R820	NRSA63D-222X	M.G.RESISTOR	2.2k	1/16W
R821	NRSA63D-102X	M.G.RESISTOR	1k	1/16W
R822	NRSA63D-223X	M.G.RESISTOR	22k	1/16W
R823	NRSA63D-223X	M.G.RESISTOR	22k	1/16W
R824	NRSA63D-222X	M.G.RESISTOR	2.2k	1/16W
R825	NRSA63D-222X	M.G.RESISTOR	2.2k	1/16W
R826	NRSA63D-562X	M.G.RESISTOR	5.6k	1/16W
R827	NRSA63D-274X	M.G.RESISTOR	270k	1/16W
R828	NRSA63D-223X	M.G.RESISTOR	22k	1/16W
R829	NRSA63D-223X	M.G.RESISTOR	22k	1/16W
R830	NRSA63J-105X	M.G.RESISTOR	1M	1/16W
R831	NRSA63D-103X	M.G.RESISTOR	10k	1/16W
R832	NRSA63D-223X	M.G.RESISTOR	22k	1/16W
R833	NRSA63D-223X	M.G.RESISTOR	22k	1/16W
R834	NRSA63D-222X	M.G.RESISTOR	2.2k	1/16W
R835	NRSA63D-222X	M.G.RESISTOR	2.2k	1/16W
R836	NRSA63D-562X	M.G.RESISTOR	5.6k	1/16W
R837	NRSA63D-274X	M.G.RESISTOR	270k	1/16W
R838	NRSA63D-223X	M.G.RESISTOR	22k	1/16W
R839	NRSA63D-223X	M.G.RESISTOR	22k	1/16W
R840	NRSA63J-105X	M.G.RESISTOR	1M	1/16W
R841	NRSA63D-103X	M.G.RESISTOR	10k	1/16W
R842	NRSA63D-823X	M.G.RESISTOR	82k	1/16W
R843	NRSA63D-103X	M.G.RESISTOR	10k	1/16W
R844	NRSA63D-222X	M.G.RESISTOR	2.2k	1/16W
R845	NRSA63D-332X	M.G.RESISTOR	3.3k	1/16W
R846	NRSA63D-103X	M.G.RESISTOR	10k	1/16W

[SS/RFP]

Symbol No.	Part No.	Part Name	Description	
R847	NRSA63D-184X	M.G.RESISTOR	180k	1/16W
R848	NRSA63D-473X	M.G.RESISTOR	47k	1/16W
R849	NRSA63D-103X	M.G.RESISTOR	10k	1/16W
R850	NRSA63D-103X	M.G.RESISTOR	10k	1/16W
R851	NRSA63D-103X	M.G.RESISTOR	10k	1/16W
R852	NRSA63D-474X	M.G.RESISTOR	470k	1/16W
R853	NRSA63D-124X	M.G.RESISTOR	120k	1/16W
R854	NRSA63D-104X	M.G.RESISTOR	100k	1/16W
R855	NRSA63D-153X	M.G.RESISTOR	15k	1/16W
R856	NRS144J-1R0X	M.G.RESISTOR	1	1/4W
R857	NRS144J-2R2X	M.G.RESISTOR	2.2	1/4W
R858	NRSA63D-103X	M.G.RESISTOR	10k	1/16W
R859	NRSA63D-121X	M.G.RESISTOR	120	1/16W
R860	NRSA63D-121X	M.G.RESISTOR	120	1/16W
R861	NRSA63D-103X	M.G.RESISTOR	10k	1/16W
R901	NRSA63D-682X	M.G.RESISTOR	6.8k	1/16W
R902	NRSA63D-103X	M.G.RESISTOR	10k	1/16W
R903	NRSA63D-103X	M.G.RESISTOR	10k	1/16W
R906	NRSA63D-103X	M.G.RESISTOR	10k	1/16W
R907	NRSA63D-103X	M.G.RESISTOR	10k	1/16W
R908	NRSA63D-222X	M.G.RESISTOR	2.2k	1/16W
R909	NRSA63D-103X	M.G.RESISTOR	10k	1/16W
R910	NRSA63D-103X	M.G.RESISTOR	10k	1/16W
R911	NRSA63D-103X	M.G.RESISTOR	10k	1/16W
R912	NRSA63D-222X	M.G.RESISTOR	2.2k	1/16W
R913	NRSA63D-103X	M.G.RESISTOR	10k	1/16W
R914	NRSA63D-103X	M.G.RESISTOR	10k	1/16W
R915	NRSA63D-103X	M.G.RESISTOR	10k	1/16W
R916	NRSA63D-222X	M.G.RESISTOR	2.2k	1/16W
R917	NRSA63D-103X	M.G.RESISTOR	10k	1/16W
R918	NRSA63D-103X	M.G.RESISTOR	10k	1/16W
R919	NRSA63J-0R0X	M.G.RESISTOR	0	1/16W
R920	NRSA63D-224X	M.G.RESISTOR	220k	1/16W
R921	NRSA63D-223X	M.G.RESISTOR	22k	1/16W
R923	NRSA63D-332X	M.G.RESISTOR	3.3k	1/16W
R924	NRSA63D-471X	M.G.RESISTOR	470	1/16W
R925	NRSA63J-100X	M.G.RESISTOR	10	1/16W
R926	NRSA63D-103X	M.G.RESISTOR	10k	1/16W
R927	NRSA63D-223X	M.G.RESISTOR	22k	1/16W
R928	NRSA63D-333X	M.G.RESISTOR	33k	1/16W
R929	NRSA63D-153X	M.G.RESISTOR	15k	1/16W
R930	NRSA63D-222X	M.G.RESISTOR	2.2k	1/16W
R931	NRSA63D-332X	M.G.RESISTOR	3.3k	1/16W
R932	NRSA63D-471X	M.G.RESISTOR	470	1/16W
R933	NRSA63J-100X	M.G.RESISTOR	10	1/16W
R934	NRSA63D-223X	M.G.RESISTOR	22k	1/16W
R936	NRSA63D-332X	M.G.RESISTOR	3.3k	1/16W
R937	NRSA63D-471X	M.G.RESISTOR	470	1/16W
R938	NRSA63J-100X	M.G.RESISTOR	10	1/16W
R939	NRSA63D-103X	M.G.RESISTOR	10k	1/16W
VR101	NVP1415-501X	TRIM.RESISTOR	500	RF LEVEL
VR102	NVP1415-501X	TRIM.RESISTOR	500	RF LEVEL
VR201	NVP1415-501X	TRIM.RESISTOR	500	RF LEVEL
VR202	NVP1415-501X	TRIM.RESISTOR	500	RF LEVEL
VR305	NVP1415-103X	TRIM.RESISTOR	10k	VCO FRQ.
VR306	NVP1415-103X	TRIM.RESISTOR	10k	LATCH TIMING
VR307	NVP1415-103X	TRIM.RESISTOR	10k	SLICE LEVEL
VR308	NVP1415-103X	TRIM.RESISTOR	10k	ERR TIMING
VR309	NVP1415-103X	TRIM.RESISTOR	10k	PR-EQ PH
VR310	NVP1415-103X	TRIM.RESISTOR	10k	PR-EQ AMP
VR311	NVP1415-202X	TRIM.RESISTOR	2k	LEVEL
VR312	NVP1415-201X	TRIM.RESISTOR	200	DIP
VR405	NVP1415-103X	TRIM.RESISTOR	10k	VCO FRQ.
VR406	NVP1415-103X	TRIM.RESISTOR	10k	LATCH TIMING
VR407	NVP1415-103X	TRIM.RESISTOR	10k	SLICE LEVEL
VR408	NVP1415-103X	TRIM.RESISTOR	10k	ERR TIMING
VR409	NVP1415-103X	TRIM.RESISTOR	10k	PR-EQ PH
VR410	NVP1415-103X	TRIM.RESISTOR	10k	PR-EQ AMP
VR411	NVP1415-202X	TRIM.RESISTOR	2k	LEVEL
VR412	NVP1415-201X	TRIM.RESISTOR	200	DIP

Symbol No.	Part No.	Part Name	Description	
C101	NCB31CK-473X	CER.CAPACITOR	0.047	16V
C102	NCB31HK-103X	CER.CAPACITOR	0.01	50V
C103	NDC31HJ-390X	CER.CAPACITOR	39p	50V
C104	NCB31CK-473X	CER.CAPACITOR	0.047	16V
C105	NCB31CK-104X	CER.CAPACITOR	0.1	16V
C106	NCB31CK-104X	CER.CAPACITOR	0.1	16V
C108	NDC31HJ-220X	CER.CAPACITOR	22p	50V
C109	NCB31HK-103X	CER.CAPACITOR	0.01	50V
C110	NCB31CK-104X	CER.CAPACITOR	0.1	16V
C111	NBE41CM-106X	TAN.CAPACITOR	10	16V
C112	NDC31HJ-3R0X	CER.CAPACITOR	3p	50V
C113	NCB31HK-103X	CER.CAPACITOR	0.01	50V
C114	NDC31HJ-220X	CER.CAPACITOR	22p	50V
C115	NCB31CK-104X	CER.CAPACITOR	0.1	16V
C116	NCB31CK-104X	CER.CAPACITOR	0.1	16V
C117	NCB31CK-104X	CER.CAPACITOR	0.1	16V
C118	NCB31CK-473X	CER.CAPACITOR	0.047	16V
C123	NCB31HK-103X	CER.CAPACITOR	0.01	50V
C151	NCB31HK-103X	CER.CAPACITOR	0.01	50V
C152	NEH91CM-476X	E.CAPACITOR	47	16V
C153	NBE51CM-226X	TAN.CAPACITOR	22	16V
C154	NCB31HK-103X	CER.CAPACITOR	0.01	50V
C155	NCB31HK-103X	CER.CAPACITOR	0.01	50V
C159	NEH91CM-476X	E.CAPACITOR	47	16V
C160	NEH90JM-226X	E.CAPACITOR	22	6.3V
C161	NCB31HK-103X	CER.CAPACITOR	0.01	50V
C162	NCB31HK-103X	CER.CAPACITOR	0.01	50V
C167	NEH91EM-336X	E.CAPACITOR	33	25V
C168	NCB31HK-103X	CER.CAPACITOR	0.01	50V
C169	NDC31HJ-101X	CER.CAPACITOR	100p	50V
C201	NCB31CK-473X	CER.CAPACITOR	0.047	16V
C202	NCB31HK-103X	CER.CAPACITOR	0.01	50V
C203	NDC31HJ-390X	CER.CAPACITOR	39p	50V
C204	NCB31CK-473X	CER.CAPACITOR	0.047	16V
C205	NCB31CK-104X	CER.CAPACITOR	0.1	16V
C206	NCB31CK-104X	CER.CAPACITOR	0.1	16V
C208	NDC31HJ-220X	CER.CAPACITOR	22p	50V
C209	NCB31HK-103X	CER.CAPACITOR	0.01	50V
C210	NCB31CK-104X	CER.CAPACITOR	0.1	16V
C211	NBE41CM-106X	TAN.CAPACITOR	10	16V
C212	NDC31HJ-3R0X	CER.CAPACITOR	3p	50V
C213	NCB31HK-103X	CER.CAPACITOR	0.01	50V
C214	NDC31HJ-220X	CER.CAPACITOR	22p	50V
C215	NCB31CK-104X	CER.CAPACITOR	0.1	16V
C216	NCB31CK-104X	CER.CAPACITOR	0.1	16V
C217	NCB31CK-104X	CER.CAPACITOR	0.1	16V
C218	NCB31CK-473X	CER.CAPACITOR	0.047	16V
C223	NCB31HK-103X	CER.CAPACITOR	0.01	50V
C301	NCB31HK-103X	CER.CAPACITOR	0.01	50V
C302	NCB31CK-104X	CER.CAPACITOR	0.1	16V
C303	NCB31CK-104X	CER.CAPACITOR	0.1	16V
C304	NCB31HK-103X	CER.CAPACITOR	0.01	50V
C305	NCB31HK-102X	CER.CAPACITOR	1000p	50V
C306	NCB31HK-102X	CER.CAPACITOR	1000p	50V
C307	NCB31CK-104X	CER.CAPACITOR	0.1	16V
C308	NCB31HK-102X	CER.CAPACITOR	1000p	50V
C309	NCB31HK-103X	CER.CAPACITOR	0.01	50V
C310	NCB31HK-103X	CER.CAPACITOR	0.01	50V
C311	NBE21AM-106X	TAN.CAPACITOR	10	10V
C312	NCB31HK-103X	CER.CAPACITOR	0.01	50V
C313	NCB31CK-104X	CER.CAPACITOR	0.1	16V
C314	NCB31HK-103X	CER.CAPACITOR	0.01	50V
C315	NDC31HJ-331X	CER.CAPACITOR	330p	50V
C316	NCB31CK-104X	CER.CAPACITOR	0.1	16V
C317	NCB31CK-104X	CER.CAPACITOR	0.1	16V
C318	NCB31HK-152X	CER.CAPACITOR	1500p	50V
C319	NCB31HK-103X	CER.CAPACITOR	0.01	50V
C320	NCB31HK-103X	CER.CAPACITOR	0.01	50V
C321	NBE21AM-106X	TAN.CAPACITOR	10	10V
C322	NCB31HK-103X	CER.CAPACITOR	0.01	50V
C323	NCB31CK-473X	CER.CAPACITOR	0.047	16V
C325	NCB31CK-473X	CER.CAPACITOR	0.047	16V
C326	NCB31CK-473X	CER.CAPACITOR	0.047	16V

Symbol No.	Part No.	Part Name	Description	
C327	NCB31HK-103X	CER.CAPACITOR	0.01	50V
C328	NDC31HJ-391X	CER.CAPACITOR	390p	50V
C329	NDC31HJ-471X	CER.CAPACITOR	470p	50V
C330	NCB31HK-103X	CER.CAPACITOR	0.01	50V
C331	NCB31CK-104X	CER.CAPACITOR	0.1	16V
C332	NCB31CK-104X	CER.CAPACITOR	0.1	16V
C333	NCB31CK-104X	CER.CAPACITOR	0.1	16V
C334	NCB31HK-103X	CER.CAPACITOR	0.01	50V
C335	NCB31HK-103X	CER.CAPACITOR	0.01	50V
C336	NCB31CK-104X	CER.CAPACITOR	0.1	16V
C337	NCB31CK-104X	CER.CAPACITOR	0.1	16V
C338	NCB31HK-103X	CER.CAPACITOR	0.01	50V
C340	NCB31CK-104X	CER.CAPACITOR	0.1	16V
C341	NCB31HK-103X	CER.CAPACITOR	0.01	50V
C342	NBE41CM-106X	TAN.CAPACITOR	10	16V
C343	NBE21AM-106X	TAN.CAPACITOR	10	10V
C344	NCB11AK-225X	CER.CAPACITOR	2.2	10V
C345	NCB31HK-103X	CER.CAPACITOR	0.01	50V
C347	NBE21AM-106X	TAN.CAPACITOR	10	10V
C348	NBE21AM-106X	TAN.CAPACITOR	10	10V
C349	NCB31CK-104X	CER.CAPACITOR	0.1	16V
C350	NBE21AM-106X	TAN.CAPACITOR	10	10V
C351	NBE41CM-106X	TAN.CAPACITOR	10	16V
C401	NCB31HK-103X	CER.CAPACITOR	0.01	50V
C402	NCB31CK-104X	CER.CAPACITOR	0.1	16V
C403	NCB31CK-104X	CER.CAPACITOR	0.1	16V
C404	NCB31HK-103X	CER.CAPACITOR	0.01	50V
C405	NCB31HK-102X	CER.CAPACITOR	1000p	50V
C406	NCB31HK-102X	CER.CAPACITOR	1000p	50V
C407	NCB31CK-104X	CER.CAPACITOR	0.1	16V
C408	NCB31HK-102X	CER.CAPACITOR	1000p	50V
C409	NCB31HK-103X	CER.CAPACITOR	0.01	50V
C410	NCB31HK-103X	CER.CAPACITOR	0.01	50V
C411	NBE21AM-106X	TAN.CAPACITOR	10	10V
C412	NCB31HK-103X	CER.CAPACITOR	0.01	50V
C413	NCB31CK-104X	CER.CAPACITOR	0.1	16V
C414	NCB31HK-103X	CER.CAPACITOR	0.01	50V
C415	NDC31HJ-331X	CER.CAPACITOR	330p	50V
C416	NCB31CK-104X	CER.CAPACITOR	0.1	16V
C417	NCB31CK-104X	CER.CAPACITOR	0.1	16V
C418	NCB31HK-152X	CER.CAPACITOR	1500p	50V
C419	NCB31HK-103X	CER.CAPACITOR	0.01	50V
C420	NCB31HK-103X	CER.CAPACITOR	0.01	50V
C421	NBE21AM-106X	TAN.CAPACITOR	10	10V
C422	NCB31HK-103X	CER.CAPACITOR	0.01	50V
C423	NCB31CK-473X	CER.CAPACITOR	0.047	16V
C425	NCB31CK-473X	CER.CAPACITOR	0.047	16V
C426	NCB31CK-473X	CER.CAPACITOR	0.047	16V
C427	NCB31HK-103X	CER.CAPACITOR	0.01	50V
C428	NDC31HJ-391X	CER.CAPACITOR	390p	50V
C429	NDC31HJ-471X	CER.CAPACITOR	470p	50V
C430	NCB31HK-103X	CER.CAPACITOR	0.01	50V
C431	NCB31CK-104X	CER.CAPACITOR	0.1	16V
C432	NCB31CK-104X	CER.CAPACITOR	0.1	16V
C433	NCB31CK-104X	CER.CAPACITOR	0.1	16V
C434	NCB31HK-103X	CER.CAPACITOR	0.01	50V
C435	NCB31HK-103X	CER.CAPACITOR	0.01	50V
C436	NCB31CK-104X	CER.CAPACITOR	0.1	16V
C437	NCB31CK-104X	CER.CAPACITOR	0.1	16V
C438	NCB31HK-103X	CER.CAPACITOR	0.01	50V
C440	NCB31CK-104X	CER.CAPACITOR	0.1	16V
C441	NCB31HK-103X	CER.CAPACITOR	0.01	50V
C442	NBE41CM-106X	TAN.CAPACITOR	10	16V
C443	NBE21AM-106X	TAN.CAPACITOR	10	10V
C444	NCB11AK-225X	CER.CAPACITOR	2.2	10V
C445	NCB31HK-103X	CER.CAPACITOR	0.01	50V
C447	NBE21AM-106X	TAN.CAPACITOR	10	10V
C448	NBE21AM-106X	TAN.CAPACITOR	10	10V
C449	NCB31CK-104X	CER.CAPACITOR	0.1	16V
C450	NBE21AM-106X	TAN.CAPACITOR	10	10V
C451	NBE41CM-106X	TAN.CAPACITOR	10	16V
C501	NCB31CK-104X	CER.CAPACITOR	0.1	16V
C505	NCB31HK-103X	CER.CAPACITOR	0.01	50V

Symbol No.	Part No.	Part Name	Description	
C506	NBE41CM-106X	TAN.CAPACITOR	10	16V
C509	NBE41CM-106X	TAN.CAPACITOR	10	16V
C510	NCB31HK-103X	CER.CAPACITOR	0.01	50V
C511	NCB31HK-103X	CER.CAPACITOR	0.01	50V
C512	NCB31HK-103X	CER.CAPACITOR	0.01	50V
C513	NCB31HK-103X	CER.CAPACITOR	0.01	50V
C516	NDC31HJ-3R0X	CER.CAPACITOR	3p	50V
C517	NDC31HJ-3R0X	CER.CAPACITOR	3p	50V
C518	NDC31HJ-3R0X	CER.CAPACITOR	3p	50V
C519	NDC31HJ-3R0X	CER.CAPACITOR	3p	50V
C601	NCB31CK-104X	CER.CAPACITOR	0.1	16V
C602	NCB31CK-104X	CER.CAPACITOR	0.1	16V
C603	NCB31CK-104X	CER.CAPACITOR	0.1	16V
C604	NCB31CK-104X	CER.CAPACITOR	0.1	16V
C605	NCB31CK-104X	CER.CAPACITOR	0.1	16V
C606	NCB31CK-104X	CER.CAPACITOR	0.1	16V
C607	NCB31HK-102X	CER.CAPACITOR	1000p	50V
C608	NCB31CK-104X	CER.CAPACITOR	0.1	16V
C609	NCB31HK-102X	CER.CAPACITOR	1000p	50V
C610	NDC31HJ-8R0X	CER.CAPACITOR	8p	50V
C611	NCB31HK-103X	CER.CAPACITOR	0.01	50V
C612	NCB31HK-103X	CER.CAPACITOR	0.01	50V
C613	NCB31CK-104X	CER.CAPACITOR	0.1	16V
C614	NCB31CK-104X	CER.CAPACITOR	0.1	16V
C615	NCB31CK-104X	CER.CAPACITOR	0.1	16V
C616	NCB31CK-104X	CER.CAPACITOR	0.1	16V
C617	NCB31HK-472X	CER.CAPACITOR	4700p	50V
C618	NCB31CK-104X	CER.CAPACITOR	0.1	16V
C619	NCB31CK-104X	CER.CAPACITOR	0.1	16V
C620	NCB31HK-472X	CER.CAPACITOR	4700p	50V
C621	NCB31CK-104X	CER.CAPACITOR	0.1	16V
C622	NEH91CM-476X	E.CAPACITOR	47	16V
C623	NCB31CK-104X	CER.CAPACITOR	0.1	16V
C624	NCB31CK-104X	CER.CAPACITOR	0.1	16V
C625	NEH91EM-475X	E.CAPACITOR	4.7	25V
C626	NCB31CK-104X	CER.CAPACITOR	0.1	16V
C627	NCB31CK-104X	CER.CAPACITOR	0.1	16V
C629	NCB31CK-104X	CER.CAPACITOR	0.1	16V
C654	NCB31CK-104X	CER.CAPACITOR	0.1	16V
C655	NFV41HJ-563X	FILM CAPACITOR	0.056	50V
C656	NDC31HJ-561X	CER.CAPACITOR	560p	50V
C657	NFV41HJ-823X	FILM CAPACITOR	0.082	50V
C658	NCB31HK-392X	CER.CAPACITOR	3900p	50V
C659	NEH91CM-106X	E.CAPACITOR	10	16V
C660	NCB31HK-103X	CER.CAPACITOR	0.01	50V
C661	NCB31CK-104X	CER.CAPACITOR	0.1	16V
C662	NCB31CK-104X	CER.CAPACITOR	0.1	16V
C663	NCB31CK-473X	CER.CAPACITOR	0.047	16V
C664	NCB31HK-102X	CER.CAPACITOR	1000p	50V
C665	NCB31CK-104X	CER.CAPACITOR	0.1	16V
C666	NCB31CK-104X	CER.CAPACITOR	0.1	16V
C667	NCB31CK-104X	CER.CAPACITOR	0.1	16V
C668	NCB31CK-823X	CER.CAPACITOR	0.082	16V
C669	NCB11CK-105X	CER.CAPACITOR	1	16V
C670	NCB31CK-104X	CER.CAPACITOR	0.1	16V
C671	NDC31HJ-470X	CER.CAPACITOR	47p	50V
C672	NDC31HJ-270X	CER.CAPACITOR	27p	50V
C673	NCB31CK-473X	CER.CAPACITOR	0.047	16V
C674	NCB31CK-473X	CER.CAPACITOR	0.047	16V
C675	NCB31CK-473X	CER.CAPACITOR	0.047	16V
C676	NCB31CK-273X	CER.CAPACITOR	0.027	16V
C677	NCB31CK-104X	CER.CAPACITOR	0.1	16V
C678	NCB31HK-102X	CER.CAPACITOR	1000p	50V
C679	NCB31CK-104X	CER.CAPACITOR	0.1	16V
C681	NCB11CK-105X	CER.CAPACITOR	1	16V
C685	NCB31EK-223X	CER.CAPACITOR	0.022	25V
C686	NCB31CK-104X	CER.CAPACITOR	0.1	16V
C687	NCB31CK-104X	CER.CAPACITOR	0.1	16V
C688	NCB31CK-104X	CER.CAPACITOR	0.1	16V
C689	NCB31CK-104X	CER.CAPACITOR	0.1	16V
C801	NCB31HK-102X	CER.CAPACITOR	1000p	50V
C802	NCB31CK-104X	CER.CAPACITOR	0.1	16V
C803	NDC31HJ-470X	CER.CAPACITOR	47p	50V

[SS/RFP]

Symbol No.	Part No.	Part Name	Description
C804	NDC31HJ-271X	CER.CAPACITOR	270p 50V
C805	NCB31CK-473X	CER.CAPACITOR	0.047 16V
C806	NCB11CK-105X	CER.CAPACITOR	1 16V
C807	NCB31CK-104X	CER.CAPACITOR	0.1 16V
C808	NCB31CK-104X	CER.CAPACITOR	0.1 16V
C809	NCB10JM-335X	CER.CAPACITOR	3.3 6.3V
C810	NCB31CK-104X	CER.CAPACITOR	0.1 16V
C811	NCB31CK-104X	CER.CAPACITOR	0.1 16V
C812	NCB31CK-104X	CER.CAPACITOR	0.1 16V
C813	NBE21EM-105X	TAN.CAPACITOR	1 25V
C814	NCB31HK-102X	CER.CAPACITOR	1000p 50V
C815	NDC31HJ-330X	CER.CAPACITOR	33p 50V
C816	NCB31CK-104X	CER.CAPACITOR	0.1 16V
C817	NCB31CK-104X	CER.CAPACITOR	0.1 16V
C818	NCB31CK-104X	CER.CAPACITOR	0.1 16V
C819	NCB31CK-104X	CER.CAPACITOR	0.1 16V
C820	NBE21EM-105X	TAN.CAPACITOR	1 25V
C821	NCB31HK-102X	CER.CAPACITOR	1000p 50V
C822	NDC31HJ-330X	CER.CAPACITOR	33p 50V
C823	NDC31HJ-101X	CER.CAPACITOR	100p 50V
C824	NCB31CK-104X	CER.CAPACITOR	0.1 16V
C825	NDC31HJ-101X	CER.CAPACITOR	100p 50V
C826	NCB31CK-104X	CER.CAPACITOR	0.1 16V
C827	NBE41CM-106X	TAN.CAPACITOR	10 16V
C828	NCB31CK-104X	CER.CAPACITOR	0.1 16V
C829	NCB31HK-153X	CER.CAPACITOR	0.015 50V
C830	NCB31CK-273X	CER.CAPACITOR	0.027 16V
C831	NCB31CK-104X	CER.CAPACITOR	0.1 16V
C832	NCB31EK-223X	CER.CAPACITOR	0.022 25V
C833	NCB31EK-223X	CER.CAPACITOR	0.022 25V
C834	NCB31EK-223X	CER.CAPACITOR	0.022 25V
C835	NCB31CK-104X	CER.CAPACITOR	0.1 16V
C836	NEN71HM-224X	N.P.CAPACITOR	0.22 50V
C837	NEN71HM-224X	N.P.CAPACITOR	0.22 50V
C838	NEN71HM-224X	N.P.CAPACITOR	0.22 50V
C839	NCB31CK-104X	CER.CAPACITOR	0.1 16V
C840	NEH90JM-336X	E.CAPACITOR	33 6.3V
C841	NEH90JM-336X	E.CAPACITOR	33 6.3V
C842	NEH90JM-336X	E.CAPACITOR	33 6.3V
C843	NEH90JM-336X	E.CAPACITOR	33 6.3V
C844	NCB31CK-104X	CER.CAPACITOR	0.1 16V
C847	NCB10JM-335X	CER.CAPACITOR	3.3 6.3V
C849	NCB10JM-335X	CER.CAPACITOR	3.3 6.3V
C851	NEH90JM-107X	E.CAPACITOR	100 6.3V
C852	NCB10JM-335X	CER.CAPACITOR	3.3 6.3V
C854	NEH91CM-476X	E.CAPACITOR	47 16V
C855	NCB31CK-104X	CER.CAPACITOR	0.1 16V
C856	NEH71EM-476X	E.CAPACITOR	47 25V
C857	NEH91EM-336X	E.CAPACITOR	33 25V
C901	NEX11DM-476X	E.CAPACITOR	47 20V
C902	NCB31CK-104X	CER.CAPACITOR	0.1 16V
C903	NCB31HK-102X	CER.CAPACITOR	1000p 50V
C904	NCB31HK-103X	CER.CAPACITOR	0.01 50V
C905	NBE21EM-105X	TAN.CAPACITOR	1 25V
C906	NCB31CK-104X	CER.CAPACITOR	0.1 16V
C907	NCB31HK-103X	CER.CAPACITOR	0.01 50V
C908	NBE21EM-105X	TAN.CAPACITOR	1 25V
C909	NBE21EM-105X	TAN.CAPACITOR	1 25V
C910	NCB31CK-104X	CER.CAPACITOR	0.1 16V
C911	NCR21CK-563X	CER.CAPACITOR	0.056 16V
C912	NCB31CK-104X	CER.CAPACITOR	0.1 16V
C913	NEX11DM-476X	E.CAPACITOR	47 20V
C914	NCB31CK-104X	CER.CAPACITOR	0.1 16V
C915	NCB31CK-104X	CER.CAPACITOR	0.1 16V
C916	NEX11DM-476X	E.CAPACITOR	47 20V
C917	NCB31HK-102X	CER.CAPACITOR	1000p 50V
C918	NEX11DM-476X	E.CAPACITOR	47 20V
C919	NEH90JM-336X	E.CAPACITOR	33 6.3V
VC301	NAT3112-200X	TRIM.CAPACITOR	20p DIP
VC401	NAT3112-200X	TRIM.CAPACITOR	20p DIP

Symbol No.	Part No.	Part Name	Description
L101	NQL024J-R47X	COIL	0.47uH
L102	NQL024J-R47X	COIL	0.47uH
L151	NQL114K-100X	COIL	10uH
L152	NQL114K-100X	COIL	10uH
L153	NQL114K-100X	COIL	10uH
L155	NQL24CN-470X	COIL	47uH
L156	NQL114K-100X	COIL	10uH
L201	NQL024J-R47X	COIL	0.47uH
L202	NQL024J-R47X	COIL	0.47uH
L601	NQR0181-001X	COIL	000uH
L602	NQL124J-100X	COIL	10uH
L801	NQL12BJ-101X	COIL	100uH
L802	NQL12BJ-101X	COIL	100uH
L803	NQL12BJ-101X	COIL	100uH
L804	NQL12BJ-101X	COIL	100uH
L805	NQL12BJ-101X	COIL	100uH
L806	NQL12BJ-101X	COIL	100uH
L807	NQL114K-100X	COIL	10uH
L808	NQL114K-100X	COIL	10uH
L809	NQL12BK-470X	COIL	47uH
L901	NQL24CN-470X	COIL	47uH
L902	NQL24CN-470X	COIL	47uH
L903	NQL25CM-470X	COIL	47uH
L904	SSV2810-330V	COIL	33uH
L905	NQL12BJ-101X	COIL	100uH
LC801	PGZ01972Z	LC FILTER	
X601	NAX0065-002X	CRYSTAL	12MHz
TH301	NAD0002-103X	THERMISTOR	10k
TH302	NAD0002-103X	THERMISTOR	10k
TH401	NAD0002-103X	THERMISTOR	10k
TH402	NAD0002-103X	THERMISTOR	10k
S601	NSW0018-001X	SLIDE SWITCH	
CN13	QGA1201C2-09X	CONNECTOR	9PIN
CN41	QGA1201C2-09X	CONNECTOR	9PIN
CN42	QGA1201C2-03X	CONNECTOR	3PIN
CN46	SCV2850-040X	CONNECTOR	40PIN
CN47	SCV2850-040X	CONNECTOR	40PIN
CN48	QGA1501C2-02W	CONNECTOR	2PIN
CN49	QGA1201C2-05X	CONNECTOR	5PIN
CN50	QGA1201C2-09X	CONNECTOR	2-PIN
CN51	QGA1201C2-02X	CONNECTOR	2PIN
CN52	QGF1012F1-11X	CONNECTOR	11PIN
CN53	QGF1012F1-10X	CONNECTOR	10PIN
CN54	SSV2615-14	CONNECTOR	14PIN
CN55	PGZ01932-012Z	CONNECTOR	12PIN
TP101	NNZ0009-001X	TEST POINT	TP101-601
FL301	PGZ02180-W	FL FILTER	FL301,401
K101	PGZ00627Z	FERRATE BEADS	K101-103
K151	PGZ00354	FERRATE BEADS	K151,804,901
K201	PGZ00627Z	FERRATE BEADS	K201-802
T101	PGZ02198-02Z	COIL	
T151	PGZ02198-02Z	COIL	
T201	PGZ02198-02Z	COIL	
TB1	NNZ0006-001X	EARTH TERMINAL	TB1,2

6.8 AUDIO&LCD BOARD ASSEMBLY PARTS LIST [0][8]

SCK2539-01-N0A/SCK2587-01-U0A(U)

SCK2539-01-E0A(E) [0][8]□□□□□□□

Note: The AUDIO & LCD board assembly will be changed from SCK2539-01-N0A to SCK2587-01-U0A for future production and they do have interchangeability.

Symbol No.	Part No.	Part Name	Description	
IC1	TC4053BFT-X	I.C.(M)	TOSHIBA	
IC2	TC4053BFT-X	I.C.(M)	TOSHIBA	
IC3	LM837M-X	I.C.(M)	NATIONAL SEMICO	
IC4	LM837M-X	I.C.(M)	NATIONAL SEMICO	
IC5	TC4053BFT-X	I.C.(M)	TOSHIBA	
IC6	TC4053BFT-X	I.C.(M)	TOSHIBA	
IC7	TC4S81F-X	I.C.(M)	TOSHIBA	
IC8	TC4S81F-X	I.C.(M)	TOSHIBA	
IC9	M5218AFP-X	I.C.(M)	MITSUBISHI	
IC10	M5218AFP-X	I.C.(M)	MITSUBISHI	
IC11	M5282FP-X	I.C.(M)	MITSUBISHI	
IC12	M5282FP-X	I.C.(M)	MITSUBISHI	
IC13	TC4W53FU-X	I.C.(M)	TOSHIBA	
IC14	TC4W53FU-X	I.C.(M)	TOSHIBA	
IC15	M5218AFP-X	I.C.(M)	MITSUBISHI	
IC16	M5218AFP-X	I.C.(M)	MITSUBISHI	
IC17	LM837M-X	I.C.(M)	NATIONAL SEMICO	
IC18	LM837M-X	I.C.(M)	NATIONAL SEMICO	
IC19	M5218AFP-X	I.C.(M)	MITSUBISHI	
IC20	M5218AFP-X	I.C.(M)	MITSUBISHI	
IC21	AN77L05M-X	I.C.(M)	MATSUSHITA	
IC25	TC4S81F-X	I.C.(M)	TOSHIBA	
IC26	TC4S81F-X	I.C.(M)	TOSHIBA	
IC27	TC4S81F-X	I.C.(M)	TOSHIBA	
IC28	TC4S81F-X	I.C.(M)	TOSHIBA	
IC301	TC4W53FU-X	I.C.(M)	TOSHIBA	
IC302	TC4W53FU-X	I.C.(M)	TOSHIBA	
IC303	M5282FP-X	I.C.(M)	MITSUBISHI	
IC304	M5282FP-X	I.C.(M)	MITSUBISHI	
IC305	M5218AFP-X	I.C.(M)	MITSUBISHI	
IC306	M5218AFP-X	I.C.(M)	MITSUBISHI	
IC307	TC4W53FU-X	I.C.(M)	TOSHIBA	
IC308	TC4W53FU-X	I.C.(M)	TOSHIBA	
IC309	LM837M-X	I.C.(M)	NATIONAL SEMICO	
IC310	LM837M-X	I.C.(M)	NATIONAL SEMICO	
IC313	M5218AFP-X	I.C.(M)	MITSUBISHI	
IC314	M5218AFP-X	I.C.(M)	MITSUBISHI	
IC315	AN77L05M-X	I.C.(M)	MATSUSHITA	
IC401	PLSC1237	I.C.(M)	UPD78P054GC-3B9	(E)
	PLSC1262	I.C.(M)	UPD78P054GC-3B9	(U)
IC403	TC7SU04FU-X	I.C.(M)	TOSHIBA	
IC404	TC4053BFT-X	I.C.(M)	TOSHIBA	
IC405	NJM4556AM-X	I.C.(M)	JRC	
IC406	MSM6338MS-K-X	I.C.(M)	OKI	
IC408	TC7W126FU-X	I.C.(M)	TOSHIBA	
IC409	TC7S66FU-X	I.C.(M)	TOSHIBA	
IC411	TC74VHC123AFT-X	I.C.(M)	TOSHIBA	
IC412	TC7W74FU-X	I.C.(M)	TOSHIBA	
IC413	TC7SH08FU-X	I.C.(M)	TOSHIBA	
IC414	NJM319M-X	I.C.(M)	JRC	
IC416	M5218AFP-X	I.C.(M)	MITSUBISHI	
IC421	S-80840ANNP-W	I.C.(M)	SEIKO	
IC422	S-8423LFS-X	I.C.(M)	SEIKO	
IC423	AN77L05M-X	I.C.(M)	MATSUSHITA	
IC424	BU4094BCFV-X	I.C.(M)	ROHM	
IC425	S-80840ANNP-W	I.C.(M)	SEIKO	
IC701	NJM062M-X	I.C.(M)	JRC	
IC711	M5218AFP-X	I.C.(M)	MITSUBISHI	
IC731	M5201FP-X	I.C.(M)	MITSUBISHI	
IC732	M5201FP-X	I.C.(M)	MITSUBISHI	
IC733	M5218AFP-X	I.C.(M)	MITSUBISHI	
IC734	M5218AFP-X	I.C.(M)	MITSUBISHI	
IC772	BU4094BCFV-X	I.C.(M)	ROHM	
IC901	BA7795FS-X	I.C.(M)	ROHM	
IC902	BA7795FS-X	I.C.(M)	ROHM	
IC903	TC4053BFT-X	I.C.(M)	TOSHIBA	
IC904	TC4053BFT-X	I.C.(M)	TOSHIBA	
IC905	M5218AFP-X	I.C.(M)	MITSUBISHI	
IC906	M5218AFP-X	I.C.(M)	MITSUBISHI	
IC907	TC4S69F-X	I.C.(M)	TOSHIBA	
Q1	2SD2240/RST/-X	TRANSISTOR	MATSUSHITA	
Q2	2SD2240/RST/-X	TRANSISTOR	MATSUSHITA	
Q3	2SB1463/RST/-X	TRANSISTOR	MATSUSHITA	
Q4	2SB1463/RST/-X	TRANSISTOR	MATSUSHITA	
Q5	2SD2240/RST/-X	TRANSISTOR	MATSUSHITA	
Q6	2SD2240/RST/-X	TRANSISTOR	MATSUSHITA	
Q7	2SD2240/RST/-X	TRANSISTOR	MATSUSHITA	
Q8	2SD2240/RST/-X	TRANSISTOR	MATSUSHITA	
Q9	DTC124EUA-X	TRANSISTOR	ROHM	
Q10	DTC124EUA-X	TRANSISTOR	ROHM	
Q11	DTA124EUA-X	TRANSISTOR	ROHM	
Q12	DTA124EUA-X	TRANSISTOR	ROHM	
Q13	DTC124EUA-X	TRANSISTOR	ROHM	
Q14	DTC124EUA-X	TRANSISTOR	ROHM	
Q15	DTA124EUA-X	TRANSISTOR	ROHM	
Q16	DTA124EUA-X	TRANSISTOR	ROHM	
Q17	2SK1062-X	FET	TOSHIBA	
Q18	2SK1062-X	FET	TOSHIBA	
Q21	DTC124TUA-X	TRANSISTOR	ROHM	
Q22	DTC124TUA-X	TRANSISTOR	ROHM	
Q23	DTC124EUA-X	TRANSISTOR	ROHM	
Q24	DTC124EUA-X	TRANSISTOR	ROHM	
Q25	DTA124EUA-X	TRANSISTOR	ROHM	
Q26	DTA124EUA-X	TRANSISTOR	ROHM	
Q27	DTC124EUA-X	TRANSISTOR	ROHM	
Q28	DTC124EUA-X	TRANSISTOR	ROHM	
Q29	DTC124EUA-X	TRANSISTOR	ROHM	
Q30	DTC124EUA-X	TRANSISTOR	ROHM	
Q43	FMW3-X	TRANSISTOR	ROHM	
Q44	FMW3-X	TRANSISTOR	ROHM	
Q47	DTA114TKA-X	TRANSISTOR	ROHM	
Q48	DTA114TKA-X	TRANSISTOR	ROHM	
Q57	DTA124EUA-X	TRANSISTOR	ROHM	
Q58	DTA124EUA-X	TRANSISTOR	ROHM	
Q59	2SD1820/QR/-X	TRANSISTOR	MATSUSHITA	
Q60	2SD1820/QR/-X	TRANSISTOR	MATSUSHITA	
Q61	DTC124TUA-X	TRANSISTOR	ROHM	
Q62	DTC124TUA-X	TRANSISTOR	ROHM	
Q63	DTC124EUA-X	TRANSISTOR	ROHM	
Q64	DTC124EUA-X	TRANSISTOR	ROHM	
Q65	2SB1219/QR/-X	TRANSISTOR	MATSUSHITA	
Q66	2SB1219/QR/-X	TRANSISTOR	MATSUSHITA	
Q101	2SC4081/QRS/-X	TRANSISTOR	ROHM	
Q102	2SC4081/QRS/-X	TRANSISTOR	ROHM	
Q103	DTA124EUA-X	TRANSISTOR	ROHM	
Q104	DTA124EUA-X	TRANSISTOR	ROHM	
Q105	2SC4081/QRS/-X	TRANSISTOR	ROHM	
Q106	2SC4081/QRS/-X	TRANSISTOR	ROHM	
Q107	2SC4081/QRS/-X	TRANSISTOR	ROHM	
Q108	2SC4081/QRS/-X	TRANSISTOR	ROHM	
Q109	DTC144EUA-X	TRANSISTOR	ROHM	
Q110	DTC144EUA-X	TRANSISTOR	ROHM	
Q111	DTC144EUA-X	TRANSISTOR	ROHM	
Q112	DTC144EUA-X	TRANSISTOR	ROHM	
Q113	2SC4081/QRS/-X	TRANSISTOR	ROHM	
Q114	2SC4081/QRS/-X	TRANSISTOR	ROHM	
Q115	2SA1577/QR/-X	TRANSISTOR	ROHM	
Q116	2SA1577/QR/-X	TRANSISTOR	ROHM	
Q117	2SC4081/QRS/-X	TRANSISTOR	ROHM	
Q118	2SC4081/QRS/-X	TRANSISTOR	ROHM	
Q119	2SA1577/QR/-X	TRANSISTOR	ROHM	
Q120	2SA1577/QR/-X	TRANSISTOR	ROHM	
Q121	DTC323TK-X	TRANSISTOR	ROHM	
Q122	DTC323TK-X	TRANSISTOR	ROHM	
Q123	DTA124EUA-X	TRANSISTOR	ROHM	
Q124	DTA124EUA-X	TRANSISTOR	ROHM	
Q125	DTC124EUA-X	TRANSISTOR	ROHM	
Q126	DTC124EUA-X	TRANSISTOR	ROHM	
Q301	2SC4081/QRS/-X	TRANSISTOR	ROHM	
Q302	2SC4081/QRS/-X	TRANSISTOR	ROHM	
Q303	DTA124EUA-X	TRANSISTOR	ROHM	
Q304	DTA124EUA-X	TRANSISTOR	ROHM	
Q305	2SC4081/QRS/-X	TRANSISTOR	ROHM	
Q306	2SC4081/QRS/-X	TRANSISTOR	ROHM	
Q307	2SC4081/QRS/-X	TRANSISTOR	ROHM	

[AUDIO&LCD]

Symbol No.	Part No.	Part Name	Description
Q308	2SC4081/QRS/-X	TRANSISTOR	ROHM
Q309	DTC144EUA-X	TRANSISTOR	ROHM
Q310	DTC144EUA-X	TRANSISTOR	ROHM
Q311	DTC144EUA-X	TRANSISTOR	ROHM
Q312	DTC144EUA-X	TRANSISTOR	ROHM
Q313	2SC4081/QRS/-X	TRANSISTOR	ROHM
Q314	2SC4081/QRS/-X	TRANSISTOR	ROHM
Q315	2SA1577/QR/-X	TRANSISTOR	ROHM
Q316	2SA1577/QR/-X	TRANSISTOR	ROHM
Q317	2SC4081/QRS/-X	TRANSISTOR	ROHM
Q318	2SC4081/QRS/-X	TRANSISTOR	ROHM
Q319	2SA1577/QR/-X	TRANSISTOR	ROHM
Q320	2SA1577/QR/-X	TRANSISTOR	ROHM
Q321	DTC323TK-X	TRANSISTOR	ROHM
Q322	DTC323TK-X	TRANSISTOR	ROHM
Q323	DTA124EUA-X	TRANSISTOR	ROHM
Q324	DTA124EUA-X	TRANSISTOR	ROHM
Q325	DTC124EUA-X	TRANSISTOR	ROHM
Q326	DTC124EUA-X	TRANSISTOR	ROHM
Q331	DTC124EUA-X	TRANSISTOR	ROHM
Q332	DTC124EUA-X	TRANSISTOR	ROHM
Q401	DTC124EUA-X	TRANSISTOR	ROHM
Q403	DTC124EUA-X	TRANSISTOR	ROHM
Q711	FMW3-X	TRANSISTOR	ROHM
Q731	DTC124EUA-X	TRANSISTOR	ROHM
Q732	FMW3-X	TRANSISTOR	ROHM
Q733	2SB1463/RST/-X	TRANSISTOR	MATSUSHITA
Q751	2SC2873/Y/-X	TRANSISTOR	TOSHIBA
Q771	DTC124TUA-X	TRANSISTOR	ROHM
Q772	DTA124EUA-X	TRANSISTOR	ROHM
Q901	DTC124EUA-X	TRANSISTOR	ROHM
Q902	DTC124EUA-X	TRANSISTOR	ROHM
Q903	DTC124EUA-X	TRANSISTOR	ROHM
Q904	DTC124EUA-X	TRANSISTOR	ROHM
Q905	2SC4081/QRS/-X	TRANSISTOR	ROHM
Q906	2SC4081/QRS/-X	TRANSISTOR	ROHM
Q911	2SC2873/Y/-X	TRANSISTOR	TOSHIBA
Q912	2SC2873/Y/-X	TRANSISTOR	TOSHIBA
Q913	DTA124EUA-X	TRANSISTOR	ROHM
Q914	DTC124EUA-X	TRANSISTOR	ROHM
Q915	2SK1062-X	FET	TOSHIBA
D1	DA204U-X	DIODE	ROHM
D2	DA204U-X	DIODE	ROHM
D3	DA204U-X	DIODE	ROHM
D4	DA204U-X	DIODE	ROHM
D5	DA204U-X	DIODE	ROHM
D6	DA204U-X	DIODE	ROHM
D7	DA204U-X	DIODE	ROHM
D8	DA204U-X	DIODE	ROHM
D11	MA116-X	CHIP DIODE	MATSUSHITA
D12	MA116-X	CHIP DIODE	MATSUSHITA
D13	MA116-X	CHIP DIODE	MATSUSHITA
D14	MA116-X	CHIP DIODE	MATSUSHITA
D17	DAP202U-X	DIODE	ROHM
D18	DAP202U-X	DIODE	ROHM
D19	MA116-X	CHIP DIODE	MATSUSHITA
D20	MA116-X	CHIP DIODE	MATSUSHITA
D21	MA116-X	CHIP DIODE	MATSUSHITA
D22	MA116-X	CHIP DIODE	MATSUSHITA
D23	DAP202U-X	DIODE	ROHM
D24	DAP202U-X	DIODE	ROHM
D341	MA116-X	CHIP DIODE	MATSUSHITA
D342	MA116-X	CHIP DIODE	MATSUSHITA
D343	MA116-X	CHIP DIODE	MATSUSHITA
D344	MA116-X	CHIP DIODE	MATSUSHITA
D347	DAP202U-X	DIODE	ROHM
D348	DAP202U-X	DIODE	ROHM
D349	MA116-X	CHIP DIODE	MATSUSHITA
D350	MA116-X	CHIP DIODE	MATSUSHITA
D351	MA116-X	CHIP DIODE	MATSUSHITA
D352	MA116-X	CHIP DIODE	MATSUSHITA

Symbol No.	Part No.	Part Name	Description	
D353	DAP202U-X	DIODE	ROHM	
D354	DAP202U-X	DIODE	ROHM	
D403	DAN202U-X	DIODE	ROHM	
D404	MA3020-X	ZENER DIODE	MATSUSHITA	
D405	DAN202U-X	DIODE	ROHM	
D406	DA204U-X	DIODE	ROHM	
D407	DA204U-X	DIODE	ROHM	
D409	DA204U-X	DIODE	ROHM	
D410	DA204U-X	DIODE	ROHM	
D411	MA3024-X	ZENER DIODE	MATSUSHITA	
D412	MA3024-X	ZENER DIODE	MATSUSHITA	
D701	DAN202U-X	DIODE	ROHM	
D702	DAN202U-X	DIODE	ROHM	
D703	DAN202U-X	DIODE	ROHM	
D731	DA204U-X	DIODE	ROHM	
D751	MA736-X	DIODE	MATSUSHITA	
D901	MA3082/L/-X	CHIP DIODE	MATSUSHITA	
LD401	GL5HD60	L.E.D.		
R1	NRSA02J-222X	M.G.RESISTOR	2.2k	1/10W
R2	NRSA02J-222X	M.G.RESISTOR	2.2k	1/10W
R3	NRSA02J-222X	M.G.RESISTOR	2.2k	1/10W
R4	NRSA02J-222X	M.G.RESISTOR	2.2k	1/10W
R5	NRSA02J-222X	M.G.RESISTOR	2.2k	1/10W
R6	NRSA02J-222X	M.G.RESISTOR	2.2k	1/10W
R7	NRSA02J-222X	M.G.RESISTOR	2.2k	1/10W
R8	NRSA02J-222X	M.G.RESISTOR	2.2k	1/10W
R9	NRSA02J-242X	M.G.RESISTOR	2.4k	1/10W
R10	NRSA02J-242X	M.G.RESISTOR	2.4k	1/10W
R11	NRSA02J-242X	M.G.RESISTOR	2.4k	1/10W
R12	NRSA02J-242X	M.G.RESISTOR	2.4k	1/10W
R13	NRSA63D-243X	M.G.RESISTOR	24k	1/16W
R14	NRSA63D-243X	M.G.RESISTOR	24k	1/16W
R15	NRSA63D-243X	M.G.RESISTOR	24k	1/16W
R16	NRSA63D-243X	M.G.RESISTOR	24k	1/16W
R17	NRSA63D-273X	M.G.RESISTOR	27k	1/16W
R18	NRSA63D-273X	M.G.RESISTOR	27k	1/16W
R19	NRSA63D-274X	M.G.RESISTOR	270k	1/16W
R20	NRSA63D-274X	M.G.RESISTOR	270k	1/16W
R21	NRSA63D-274X	M.G.RESISTOR	270k	1/16W
R22	NRSA63D-274X	M.G.RESISTOR	270k	1/16W
R23	NRSA63D-473X	M.G.RESISTOR	47k	1/16W
R24	NRSA63D-473X	M.G.RESISTOR	47k	1/16W
R25	NRSA63D-473X	M.G.RESISTOR	47k	1/16W
R26	NRSA63D-473X	M.G.RESISTOR	47k	1/16W
R27	NRSA63J-105X	M.G.RESISTOR	1M	1/16W
R28	NRSA63J-105X	M.G.RESISTOR	1M	1/16W
R29	NRSA63D-472X	M.G.RESISTOR	4.7k	1/16W
R30	NRSA63D-472X	M.G.RESISTOR	4.7k	1/16W
R33	NRSA63D-472X	M.G.RESISTOR	4.7k	1/16W
R34	NRSA63D-472X	M.G.RESISTOR	4.7k	1/16W
R35	NRSA63D-471X	M.G.RESISTOR	470	1/16W
R36	NRSA63D-471X	M.G.RESISTOR	470	1/16W
R37	NRSA63D-471X	M.G.RESISTOR	470	1/16W
R38	NRSA63D-471X	M.G.RESISTOR	470	1/16W
R39	NRSA63D-361X	M.G.RESISTOR	360	1/16W
R40	NRSA63D-361X	M.G.RESISTOR	360	1/16W
R41	NRSA63D-361X	M.G.RESISTOR	360	1/16W
R42	NRSA63D-361X	M.G.RESISTOR	360	1/16W
R43	NRSA63D-222X	M.G.RESISTOR	2.2k	1/16W
R44	NRSA63D-222X	M.G.RESISTOR	2.2k	1/16W
R45	NRSA63D-222X	M.G.RESISTOR	2.2k	1/16W
R46	NRSA63D-222X	M.G.RESISTOR	2.2k	1/16W
R47	NRSA63D-122X	M.G.RESISTOR	1.2k	1/16W
R48	NRSA63D-122X	M.G.RESISTOR	1.2k	1/16W
R49	NRSA63D-122X	M.G.RESISTOR	1.2k	1/16W
R50	NRSA63D-122X	M.G.RESISTOR	1.2k	1/16W
R55	NRSA63D-103X	M.G.RESISTOR	10k	1/16W
R56	NRSA63D-103X	M.G.RESISTOR	10k	1/16W
R57	NRSA63D-104X	M.G.RESISTOR	100k	1/16W
R58	NRSA63D-104X	M.G.RESISTOR	100k	1/16W

Symbol No.	Part No.	Part Name	Description	
R63	NRSA63J-0R0X	M.G.RESISTOR	0	1/16W
R64	NRSA63J-0R0X	M.G.RESISTOR	0	1/16W
R65	NRSA63J-0R0X	M.G.RESISTOR	0	1/16W
R66	NRSA63J-0R0X	M.G.RESISTOR	0	1/16W
R67	NRSA63D-471X	M.G.RESISTOR	470	1/16W
R68	NRSA63D-471X	M.G.RESISTOR	470	1/16W
R71	NRSA63D-101X	M.G.RESISTOR	100	1/16W
R72	NRSA63D-101X	M.G.RESISTOR	100	1/16W
R75	NRSA63D-332X	M.G.RESISTOR	3.3k	1/16W
R76	NRSA63D-332X	M.G.RESISTOR	3.3k	1/16W
R77	NRSA63D-332X	M.G.RESISTOR	3.3k	1/16W
R78	NRSA63D-332X	M.G.RESISTOR	3.3k	1/16W
R79	NRSA63D-153X	M.G.RESISTOR	15k	1/16W
R80	NRSA63D-153X	M.G.RESISTOR	15k	1/16W
R81	NRSA63D-153X	M.G.RESISTOR	15k	1/16W
R82	NRSA63D-153X	M.G.RESISTOR	15k	1/16W
R83	NRSA63D-153X	M.G.RESISTOR	15k	1/16W
R84	NRSA63D-153X	M.G.RESISTOR	15k	1/16W
R85	NRSA63D-153X	M.G.RESISTOR	15k	1/16W
R86	NRSA63D-153X	M.G.RESISTOR	15k	1/16W
R89	NRSA63D-104X	M.G.RESISTOR	100k	1/16W
R90	NRSA63D-104X	M.G.RESISTOR	100k	1/16W
R91	NRSA63D-104X	M.G.RESISTOR	100k	1/16W
R92	NRSA63D-104X	M.G.RESISTOR	100k	1/16W
R93	NRSA63D-103X	M.G.RESISTOR	10k	1/16W
R94	NRSA63D-103X	M.G.RESISTOR	10k	1/16W
R95	NRSA63D-202X	M.G.RESISTOR	2k	1/16W
R96	NRSA63D-202X	M.G.RESISTOR	2k	1/16W
R97	NRSA63D-511X	M.G.RESISTOR	510	1/16W
R98	NRSA63D-511X	M.G.RESISTOR	510	1/16W
R101	NRSA63D-104X	M.G.RESISTOR	100k	1/16W
R102	NRSA63D-104X	M.G.RESISTOR	100k	1/16W
R103	NRSA63D-104X	M.G.RESISTOR	100k	1/16W
R104	NRSA63D-104X	M.G.RESISTOR	100k	1/16W
R107	NRSA63D-104X	M.G.RESISTOR	100k	1/16W
R108	NRSA63D-104X	M.G.RESISTOR	100k	1/16W
R109	NRSA63D-103X	M.G.RESISTOR	10k	1/16W
R110	NRSA63D-103X	M.G.RESISTOR	10k	1/16W
R111	NRSA63D-154X	M.G.RESISTOR	150k	1/16W
R112	NRSA63D-154X	M.G.RESISTOR	150k	1/16W
R113	NRSA63D-103X	M.G.RESISTOR	10k	1/16W
R114	NRSA63D-103X	M.G.RESISTOR	10k	1/16W
R115	NRSA63D-103X	M.G.RESISTOR	10k	1/16W
R116	NRSA63D-103X	M.G.RESISTOR	10k	1/16W
R117	NRSA63D-103X	M.G.RESISTOR	10k	1/16W
R118	NRSA63D-103X	M.G.RESISTOR	10k	1/16W
R119	NRSA63D-103X	M.G.RESISTOR	10k	1/16W
R120	NRSA63D-103X	M.G.RESISTOR	10k	1/16W
R121	NRSA63D-103X	M.G.RESISTOR	10k	1/16W
R122	NRSA63D-103X	M.G.RESISTOR	10k	1/16W
R123	NRSA63D-333X	M.G.RESISTOR	33k	1/16W
R124	NRSA63D-333X	M.G.RESISTOR	33k	1/16W
R125	NRSA63D-223X	M.G.RESISTOR	22k	1/16W
R126	NRSA63D-223X	M.G.RESISTOR	22k	1/16W
R127	NRSA63D-473X	M.G.RESISTOR	47k	1/16W
R128	NRSA63D-473X	M.G.RESISTOR	47k	1/16W
R129	NRSA63D-104X	M.G.RESISTOR	100k	1/16W
R130	NRSA63D-104X	M.G.RESISTOR	100k	1/16W
R131	NRSA63D-473X	M.G.RESISTOR	47k	1/16W
R132	NRSA63D-473X	M.G.RESISTOR	47k	1/16W
R133	NRSA63D-473X	M.G.RESISTOR	47k	1/16W
R134	NRSA63D-473X	M.G.RESISTOR	47k	1/16W
R135	NRSA63D-103X	M.G.RESISTOR	10k	1/16W
R136	NRSA63D-103X	M.G.RESISTOR	10k	1/16W
R137	NRSA63D-103X	M.G.RESISTOR	10k	1/16W
R138	NRSA63D-103X	M.G.RESISTOR	10k	1/16W
R139	NRSA63D-153X	M.G.RESISTOR	15k	1/16W
R140	NRSA63D-153X	M.G.RESISTOR	15k	1/16W
R141	NRSA63D-223X	M.G.RESISTOR	22k	1/16W
R142	NRSA63D-223X	M.G.RESISTOR	22k	1/16W
R143	NRSA63D-103X	M.G.RESISTOR	10k	1/16W
R144	NRSA63D-103X	M.G.RESISTOR	10k	1/16W
R145	NRSA63D-333X	M.G.RESISTOR	33k	1/16W

Symbol No.	Part No.	Part Name	Description	
R146	NRSA63D-333X	M.G.RESISTOR	33k	1/16W
R147	NRSA63D-103X	M.G.RESISTOR	10k	1/16W
R148	NRSA63D-103X	M.G.RESISTOR	10k	1/16W
R149	NRSA63D-472X	M.G.RESISTOR	4.7k	1/16W
R150	NRSA63D-472X	M.G.RESISTOR	4.7k	1/16W
R151	NRSA63D-273X	M.G.RESISTOR	27k	1/16W
R152	NRSA63D-273X	M.G.RESISTOR	27k	1/16W
R153	NRSA63D-242X	M.G.RESISTOR	2.4k	1/16W
R154	NRSA63D-242X	M.G.RESISTOR	2.4k	1/16W
R155	NRSA63D-393X	M.G.RESISTOR	39k	1/16W
R156	NRSA63D-393X	M.G.RESISTOR	39k	1/16W
R159	NRSA63D-332X	M.G.RESISTOR	3.3k	1/16W
R160	NRSA63D-332X	M.G.RESISTOR	3.3k	1/16W
R161	NRSA63D-472X	M.G.RESISTOR	4.7k	1/16W
R162	NRSA63D-472X	M.G.RESISTOR	4.7k	1/16W
R163	NRSA63D-331X	M.G.RESISTOR	330	1/16W
R164	NRSA63D-331X	M.G.RESISTOR	330	1/16W
R165	NRSA63D-103X	M.G.RESISTOR	10k	1/16W
R166	NRSA63D-103X	M.G.RESISTOR	10k	1/16W
R167	NRSA63D-331X	M.G.RESISTOR	330	1/16W
R168	NRSA63D-331X	M.G.RESISTOR	330	1/16W
R169	NRSA63D-103X	M.G.RESISTOR	10k	1/16W
R170	NRSA63D-103X	M.G.RESISTOR	10k	1/16W
R171	NRSA63D-104X	M.G.RESISTOR	100k	1/16W
R172	NRSA63D-104X	M.G.RESISTOR	100k	1/16W
R173	NRSA63D-470X	M.G.RESISTOR	47	1/16W
R174	NRSA63D-470X	M.G.RESISTOR	47	1/16W
R175	NRSA63D-334X	M.G.RESISTOR	330k	1/16W
R176	NRSA63D-334X	M.G.RESISTOR	330k	1/16W
R177	NRSA63D-244X	M.G.RESISTOR	240k	1/16W
R178	NRSA63D-244X	M.G.RESISTOR	240k	1/16W
R179	NRSA63D-334X	M.G.RESISTOR	330k	1/16W
R180	NRSA63D-334X	M.G.RESISTOR	330k	1/16W
R181	NRSA63D-103X	M.G.RESISTOR	10k	1/16W
R182	NRSA63D-103X	M.G.RESISTOR	10k	1/16W
R183	NRSA63D-103X	M.G.RESISTOR	10k	1/16W
R184	NRSA63D-103X	M.G.RESISTOR	10k	1/16W
R185	NRSA63D-334X	M.G.RESISTOR	330k	1/16W
R186	NRSA63D-334X	M.G.RESISTOR	330k	1/16W
R187	NRSA63D-473X	M.G.RESISTOR	47k	1/16W
R188	NRSA63D-473X	M.G.RESISTOR	47k	1/16W
R189	NRSA63D-472X	M.G.RESISTOR	4.7k	1/16W
R190	NRSA63D-472X	M.G.RESISTOR	4.7k	1/16W
R191	NRSA63D-102X	M.G.RESISTOR	1k	1/16W
R192	NRSA63D-102X	M.G.RESISTOR	1k	1/16W
R193	NRSA63D-472X	M.G.RESISTOR	4.7k	1/16W
R194	NRSA63D-472X	M.G.RESISTOR	4.7k	1/16W
R195	NRSA63D-472X	M.G.RESISTOR	4.7k	1/16W
R196	NRSA63D-472X	M.G.RESISTOR	4.7k	1/16W
R197	NRSA63D-472X	M.G.RESISTOR	4.7k	1/16W
R198	NRSA63D-472X	M.G.RESISTOR	4.7k	1/16W
R201	NRSA63D-103X	M.G.RESISTOR	10k	1/16W
R202	NRSA63D-103X	M.G.RESISTOR	10k	1/16W
R203	NRSA63D-103X	M.G.RESISTOR	10k	1/16W
R204	NRSA63D-103X	M.G.RESISTOR	10k	1/16W
R205	NRSA63D-103X	M.G.RESISTOR	10k	1/16W
R206	NRSA63D-103X	M.G.RESISTOR	10k	1/16W
R207	NRSA63D-103X	M.G.RESISTOR	10k	1/16W
R208	NRSA63D-103X	M.G.RESISTOR	10k	1/16W
R211	NRSA63D-103X	M.G.RESISTOR	10k	1/16W
R212	NRSA63D-103X	M.G.RESISTOR	10k	1/16W
R213	NRSA63D-103X	M.G.RESISTOR	10k	1/16W
R214	NRSA63D-103X	M.G.RESISTOR	10k	1/16W
R233	NRSA63D-183X	M.G.RESISTOR	18k	1/16W
R234	NRSA63D-183X	M.G.RESISTOR	18k	1/16W
R235	NRSA63D-332X	M.G.RESISTOR	3.3k	1/16W
R236	NRSA63D-332X	M.G.RESISTOR	3.3k	1/16W
R237	NRSA63J-105X	M.G.RESISTOR	1M	1/16W
R238	NRSA63J-105X	M.G.RESISTOR	1M	1/16W
R241	NRSA63D-472X	M.G.RESISTOR	4.7k	1/16W
R242	NRSA63D-472X	M.G.RESISTOR	4.7k	1/16W
R247	NRSA63D-183X	M.G.RESISTOR	18k	1/16W
R248	NRSA63D-183X	M.G.RESISTOR	18k	1/16W

[AUDIO&LCD]

Symbol No.	Part No.	Part Name	Description	
R249	NRSA63D-202X	M.G.RESISTOR	2k	1/16W
R250	NRSA63D-202X	M.G.RESISTOR	2k	1/16W
R251	NRSA63J-105X	M.G.RESISTOR	1M	1/16W
R252	NRSA63J-105X	M.G.RESISTOR	1M	1/16W
R261	NRSA63D-103X	M.G.RESISTOR	10k	1/16W
R262	NRSA63D-103X	M.G.RESISTOR	10k	1/16W
R263	NRSA63D-202X	M.G.RESISTOR	2k	1/16W
R264	NRSA63D-202X	M.G.RESISTOR	2k	1/16W
R265	NRSA63D-104X	M.G.RESISTOR	100k	1/16W
R266	NRSA63D-104X	M.G.RESISTOR	100k	1/16W
R267	NRSA63D-472X	M.G.RESISTOR	4.7k	1/16W
R268	NRSA63D-472X	M.G.RESISTOR	4.7k	1/16W
R269	NRSA63D-101X	M.G.RESISTOR	100	1/16W
R270	NRSA63D-101X	M.G.RESISTOR	100	1/16W
R281	NRSA63D-154X	M.G.RESISTOR	150k	1/16W
R282	NRSA63D-154X	M.G.RESISTOR	150k	1/16W
R283	NRSA63D-103X	M.G.RESISTOR	10k	1/16W
R284	NRSA63D-103X	M.G.RESISTOR	10k	1/16W
R285	NRSA63D-103X	M.G.RESISTOR	10k	1/16W
R286	NRSA63D-103X	M.G.RESISTOR	10k	1/16W
R287	NRSA63D-103X	M.G.RESISTOR	10k	1/16W
R288	NRSA63D-103X	M.G.RESISTOR	10k	1/16W
R289	NRSA63D-103X	M.G.RESISTOR	10k	1/16W
R290	NRSA63D-103X	M.G.RESISTOR	10k	1/16W
R291	NRSA63D-103X	M.G.RESISTOR	10k	1/16W
R292	NRSA63D-103X	M.G.RESISTOR	10k	1/16W
R293	NRSA63D-333X	M.G.RESISTOR	33k	1/16W
R294	NRSA63D-333X	M.G.RESISTOR	33k	1/16W
R295	NRSA63D-223X	M.G.RESISTOR	22k	1/16W
R296	NRSA63D-223X	M.G.RESISTOR	22k	1/16W
R297	NRSA63D-473X	M.G.RESISTOR	47k	1/16W
R298	NRSA63D-473X	M.G.RESISTOR	47k	1/16W
R299	NRSA63D-104X	M.G.RESISTOR	100k	1/16W
R300	NRSA63D-104X	M.G.RESISTOR	100k	1/16W
R301	NRSA63D-473X	M.G.RESISTOR	47k	1/16W
R302	NRSA63D-473X	M.G.RESISTOR	47k	1/16W
R303	NRSA63D-473X	M.G.RESISTOR	47k	1/16W
R304	NRSA63D-473X	M.G.RESISTOR	47k	1/16W
R305	NRSA63D-103X	M.G.RESISTOR	10k	1/16W
R306	NRSA63D-103X	M.G.RESISTOR	10k	1/16W
R307	NRSA63D-103X	M.G.RESISTOR	10k	1/16W
R308	NRSA63D-103X	M.G.RESISTOR	10k	1/16W
R309	NRSA63D-153X	M.G.RESISTOR	15k	1/16W
R310	NRSA63D-153X	M.G.RESISTOR	15k	1/16W
R311	NRSA63D-223X	M.G.RESISTOR	22k	1/16W
R312	NRSA63D-223X	M.G.RESISTOR	22k	1/16W
R313	NRSA63D-103X	M.G.RESISTOR	10k	1/16W
R314	NRSA63D-103X	M.G.RESISTOR	10k	1/16W
R315	NRSA63D-333X	M.G.RESISTOR	33k	1/16W
R316	NRSA63D-333X	M.G.RESISTOR	33k	1/16W
R317	NRSA63D-103X	M.G.RESISTOR	10k	1/16W
R318	NRSA63D-103X	M.G.RESISTOR	10k	1/16W
R319	NRSA63D-472X	M.G.RESISTOR	4.7k	1/16W
R320	NRSA63D-472X	M.G.RESISTOR	4.7k	1/16W
R321	NRSA63D-273X	M.G.RESISTOR	27k	1/16W
R322	NRSA63D-273X	M.G.RESISTOR	27k	1/16W
R323	NRSA63D-242X	M.G.RESISTOR	2.4k	1/16W
R324	NRSA63D-242X	M.G.RESISTOR	2.4k	1/16W
R325	NRSA63D-393X	M.G.RESISTOR	39k	1/16W
R326	NRSA63D-393X	M.G.RESISTOR	39k	1/16W
R329	NRSA63D-332X	M.G.RESISTOR	3.3k	1/16W
R330	NRSA63D-332X	M.G.RESISTOR	3.3k	1/16W
R331	NRSA63D-472X	M.G.RESISTOR	4.7k	1/16W
R332	NRSA63D-472X	M.G.RESISTOR	4.7k	1/16W
R333	NRSA63D-331X	M.G.RESISTOR	330	1/16W
R334	NRSA63D-331X	M.G.RESISTOR	330	1/16W
R335	NRSA63D-103X	M.G.RESISTOR	10k	1/16W
R336	NRSA63D-103X	M.G.RESISTOR	10k	1/16W
R337	NRSA63D-331X	M.G.RESISTOR	330	1/16W
R338	NRSA63D-331X	M.G.RESISTOR	330	1/16W
R339	NRSA63D-103X	M.G.RESISTOR	10k	1/16W
R340	NRSA63D-103X	M.G.RESISTOR	10k	1/16W

Symbol No.	Part No.	Part Name	Description	
R341	NRSA63D-104X	M.G.RESISTOR	100k	1/16W
R342	NRSA63D-104X	M.G.RESISTOR	100k	1/16W
R343	NRSA63D-470X	M.G.RESISTOR	47	1/16W
R344	NRSA63D-470X	M.G.RESISTOR	47	1/16W
R345	NRSA63D-334X	M.G.RESISTOR	330k	1/16W
R346	NRSA63D-334X	M.G.RESISTOR	330k	1/16W
R347	NRSA63D-244X	M.G.RESISTOR	240k	1/16W
R348	NRSA63D-244X	M.G.RESISTOR	240k	1/16W
R349	NRSA63D-334X	M.G.RESISTOR	330k	1/16W
R350	NRSA63D-334X	M.G.RESISTOR	330k	1/16W
R351	NRSA63D-103X	M.G.RESISTOR	10k	1/16W
R352	NRSA63D-103X	M.G.RESISTOR	10k	1/16W
R353	NRSA63D-103X	M.G.RESISTOR	10k	1/16W
R354	NRSA63D-103X	M.G.RESISTOR	10k	1/16W
R355	NRSA63D-334X	M.G.RESISTOR	330k	1/16W
R356	NRSA63D-334X	M.G.RESISTOR	330k	1/16W
R357	NRSA63D-473X	M.G.RESISTOR	47k	1/16W
R358	NRSA63D-473X	M.G.RESISTOR	47k	1/16W
R359	NRSA63D-472X	M.G.RESISTOR	4.7k	1/16W
R360	NRSA63D-472X	M.G.RESISTOR	4.7k	1/16W
R361	NRSA63D-102X	M.G.RESISTOR	1k	1/16W
R362	NRSA63D-102X	M.G.RESISTOR	1k	1/16W
R363	NRSA63D-472X	M.G.RESISTOR	4.7k	1/16W
R364	NRSA63D-472X	M.G.RESISTOR	4.7k	1/16W
R365	NRSA63D-472X	M.G.RESISTOR	4.7k	1/16W
R366	NRSA63D-472X	M.G.RESISTOR	4.7k	1/16W
R367	NRSA63J-0R0X	M.G.RESISTOR	0	1/16W
R368	NRSA63J-0R0X	M.G.RESISTOR	0	1/16W
R371	NRSA63D-104X	M.G.RESISTOR	100k	1/16W
R372	NRSA63D-104X	M.G.RESISTOR	100k	1/16W
R373	NRSA63D-103X	M.G.RESISTOR	10k	1/16W
R374	NRSA63D-103X	M.G.RESISTOR	10k	1/16W
R381	NRSA63D-103X	M.G.RESISTOR	10k	1/16W
R382	NRSA63D-103X	M.G.RESISTOR	10k	1/16W
R383	NRSA63D-103X	M.G.RESISTOR	10k	1/16W
R384	NRSA63D-103X	M.G.RESISTOR	10k	1/16W
R385	NRSA63D-103X	M.G.RESISTOR	10k	1/16W
R386	NRSA63D-103X	M.G.RESISTOR	10k	1/16W
R387	NRSA63D-103X	M.G.RESISTOR	10k	1/16W
R388	NRSA63D-103X	M.G.RESISTOR	10k	1/16W
R397	NRSA63D-103X	M.G.RESISTOR	10k	1/16W
R398	NRSA63D-103X	M.G.RESISTOR	10k	1/16W
R399	NRSA63D-103X	M.G.RESISTOR	10k	1/16W
R400	NRSA63D-103X	M.G.RESISTOR	10k	1/16W
R401	NRSA63D-121X	M.G.RESISTOR	120	1/16W
R402	NRSA63D-121X	M.G.RESISTOR	120	1/16W
R403	NRSA63D-121X	M.G.RESISTOR	120	1/16W
R404	NRSA63D-223X	M.G.RESISTOR	22k	1/16W
R405	NRSA63D-104X	M.G.RESISTOR	100k	1/16W
R408	NRSA63D-101X	M.G.RESISTOR	100	1/16W
R409	NRSA63D-102X	M.G.RESISTOR	1k	1/16W
R415	NRSA63D-333X	M.G.RESISTOR	33k	1/16W
R417	NRSA63D-224X	M.G.RESISTOR	220k	1/16W
R418	NRSA63D-101X	M.G.RESISTOR	100	1/16W
R419	NRSA63D-103X	M.G.RESISTOR	10k	1/16W
R420	NRSA63D-104X	M.G.RESISTOR	100k	1/16W
R421	NRSA63D-103X	M.G.RESISTOR	10k	1/16W
R431	NRSA63D-474X	M.G.RESISTOR	470k	1/16W
R432	NRSA63D-104X	M.G.RESISTOR	100k	1/16W
R433	NRSA63D-473X	M.G.RESISTOR	47k	1/16W
R434	NRSA63D-104X	M.G.RESISTOR	100k	1/16W
R435	NRSA63D-104X	M.G.RESISTOR	100k	1/16W
R436	NRSA63D-104X	M.G.RESISTOR	100k	1/16W
R437	NRSA63D-102X	M.G.RESISTOR	1k	1/16W
R438	NRSA63D-302X	M.G.RESISTOR	3k	1/16W
R439	NRSA63D-152X	M.G.RESISTOR	1.5k	1/16W
R440	NRSA63D-750X	M.G.RESISTOR	75	1/16W
R441	NRSA63D-303X	M.G.RESISTOR	30k	1/16W
R442	NRSA63D-104X	M.G.RESISTOR	100k	1/16W
R443	NRSA63D-103X	M.G.RESISTOR	10k	1/16W
R444	NRSA63D-104X	M.G.RESISTOR	100k	1/16W
R445	NRSA63D-102X	M.G.RESISTOR	1k	1/16W
R446	NRSA63D-223X	M.G.RESISTOR	22k	1/16W

Symbol No.	Part No.	Part Name	Description	
R447	NRSA63D-103X	M.G.RESISTOR	10k	1/16W
R451	NRSA63D-104X	M.G.RESISTOR	100k	1/16W
R452	NRSA63D-104X	M.G.RESISTOR	100k	1/16W
R453	NRSA63D-104X	M.G.RESISTOR	100k	1/16W
R454	NRSA63D-104X	M.G.RESISTOR	100k	1/16W
R455	NRSA63D-104X	M.G.RESISTOR	100k	1/16W
R456	NRSA63D-104X	M.G.RESISTOR	100k	1/16W
R457	NRSA63D-104X	M.G.RESISTOR	100k	1/16W
R458	NRSA63D-104X	M.G.RESISTOR	100k	1/16W
R459	NRSA63D-472X	M.G.RESISTOR	4.7k	1/16W
R460	NRSA63D-103X	M.G.RESISTOR	10k	1/16W
R462	NRSA63D-153X	M.G.RESISTOR	15k	1/16W
R463	NRSA63D-333X	M.G.RESISTOR	33k	1/16W
R464	NRSA63D-123X	M.G.RESISTOR	12k	1/16W
R465	NRSA63D-333X	M.G.RESISTOR	33k	1/16W
R466	NRSA63D-823X	M.G.RESISTOR	82k	1/16W
R467	NRSA63D-104X	M.G.RESISTOR	100k	1/16W
R469	NRSA63D-224X	M.G.RESISTOR	220k	1/16W
R470	NRSA63D-224X	M.G.RESISTOR	220k	1/16W
R471	NRSA63D-224X	M.G.RESISTOR	220k	1/16W
R476	NRSA63J-100X	M.G.RESISTOR	10	1/16W
R485	NRSA63D-101X	M.G.RESISTOR	100	1/16W
R486	NRSA63D-334X	M.G.RESISTOR	330k	1/16W
R487	NRSA63D-220X	M.G.RESISTOR	22	1/16W
R488	NRSA63D-220X	M.G.RESISTOR	22	1/16W
R489	NRSA63D-471X	M.G.RESISTOR	470	1/16W
R491	NRSA63D-104X	M.G.RESISTOR	100k	1/16W
R492	NRSA63D-104X	M.G.RESISTOR	100k	1/16W
R493	NRSA63D-104X	M.G.RESISTOR	100k	1/16W
R494	NRSA63D-104X	M.G.RESISTOR	100k	1/16W
R495	NRSA63D-104X	M.G.RESISTOR	100k	1/16W
R496	NRSA63D-104X	M.G.RESISTOR	100k	1/16W
R497	NRSA63D-104X	M.G.RESISTOR	100k	1/16W
R498	NRSA63D-104X	M.G.RESISTOR	100k	1/16W
R499	NRSA63D-471X	M.G.RESISTOR	470	1/16W
R501	NRSA63D-103X	M.G.RESISTOR	10k	1/16W
R502	NRSA63D-103X	M.G.RESISTOR	10k	1/16W
R503	NRSA63D-103X	M.G.RESISTOR	10k	1/16W
R504	NRSA63D-103X	M.G.RESISTOR	10k	1/16W
R505	NRSA63J-0R0X	M.G.RESISTOR	0	1/16W
R506	NRSA63J-0R0X	M.G.RESISTOR	0	1/16W
R601	NRSA63J-0R0X	M.G.RESISTOR	0	1/16W (E)
R602	NRSA63J-0R0X	M.G.RESISTOR	0	1/16W (E)
R603	NRSA63J-0R0X	M.G.RESISTOR	0	1/16W
R604	NRSA63J-0R0X	M.G.RESISTOR	0	1/16W (E)
R605	NRSA63J-0R0X	M.G.RESISTOR	0	1/16W (E)
R701	NRSA63D-104X	M.G.RESISTOR	100k	1/16W
R702	NRSA63D-104X	M.G.RESISTOR	100k	1/16W
R703	NRSA63D-473X	M.G.RESISTOR	47k	1/16W
R704	NRSA63D-473X	M.G.RESISTOR	47k	1/16W
R705	NRSA63J-0R0X	M.G.RESISTOR	0	1/16W
R706	NRSA63J-0R0X	M.G.RESISTOR	0	1/16W
R707	NRSA63D-101X	M.G.RESISTOR	100	1/16W
R708	NRSA63D-101X	M.G.RESISTOR	100	1/16W
R709	NRSA63D-223X	M.G.RESISTOR	22k	1/16W
R710	NRSA63D-223X	M.G.RESISTOR	22k	1/16W
R721	NRSA63D-103X	M.G.RESISTOR	10k	1/16W
R722	NRSA63D-103X	M.G.RESISTOR	10k	1/16W
R723	NRSA63D-103X	M.G.RESISTOR	10k	1/16W
R724	NRSA63D-103X	M.G.RESISTOR	10k	1/16W
R725	NRSA63D-101X	M.G.RESISTOR	100	1/16W
R726	NRSA63D-122X	M.G.RESISTOR	1.2k	1/16W
R727	NRSA63D-122X	M.G.RESISTOR	1.2k	1/16W
R728	NRSA63D-330X	M.G.RESISTOR	33	1/16W
R729	NRSA63D-103X	M.G.RESISTOR	10k	1/16W
R730	NRSA63D-103X	M.G.RESISTOR	10k	1/16W
R731	NRSA63D-103X	M.G.RESISTOR	10k	1/16W
R751	NRSA63D-103X	M.G.RESISTOR	10k	1/16W
R752	NRSA63D-103X	M.G.RESISTOR	10k	1/16W
R753	NRSA63D-303X	M.G.RESISTOR	30k	1/16W
R754	NRSA63D-303X	M.G.RESISTOR	30k	1/16W
R755	NRSA63D-822X	M.G.RESISTOR	8.2k	1/16W
R756	NRSA63D-822X	M.G.RESISTOR	8.2k	1/16W

Symbol No.	Part No.	Part Name	Description	
R757	NRSA63D-822X	M.G.RESISTOR	8.2k	1/16W
R758	NRSA63D-822X	M.G.RESISTOR	8.2k	1/16W
R759	NRSA63D-562X	M.G.RESISTOR	5.6k	1/16W
R760	NRSA63D-103X	M.G.RESISTOR	10k	1/16W
R761	NRSA63D-332X	M.G.RESISTOR	3.3k	1/16W
R762	NRSA63D-332X	M.G.RESISTOR	3.3k	1/16W
R763	NRSA63D-473X	M.G.RESISTOR	47k	1/16W
R764	NRSA63D-473X	M.G.RESISTOR	47k	1/16W
R765	NRSA63D-220X	M.G.RESISTOR	22	1/16W
R766	NRSA63D-220X	M.G.RESISTOR	22	1/16W
R767	NRSA63D-122X	M.G.RESISTOR	1.2k	1/16W
R768	NRSA63D-122X	M.G.RESISTOR	1.2k	1/16W
R769	NRSA63D-103X	M.G.RESISTOR	10k	1/16W
R770	NRSA63D-473X	M.G.RESISTOR	47k	1/16W
R771	NRSA63J-0R0X	M.G.RESISTOR	0	1/16W
R772	NRSA63D-333X	M.G.RESISTOR	33k	1/16W
R773	NRSA63J-0R0X	M.G.RESISTOR	0	1/16W
R775	NRSA63D-473X	M.G.RESISTOR	47k	1/16W
R777	NRSA63D-103X	M.G.RESISTOR	10k	1/16W
R778	NRSA63D-103X	M.G.RESISTOR	10k	1/16W
R779	NRSA63D-104X	M.G.RESISTOR	100k	1/16W
R780	NRSA63D-104X	M.G.RESISTOR	100k	1/16W
R781	NRSA63D-104X	M.G.RESISTOR	100k	1/16W
R782	NRSA63D-104X	M.G.RESISTOR	100k	1/16W
R783	NRSA63D-104X	M.G.RESISTOR	100k	1/16W
R784	NRSA63D-103X	M.G.RESISTOR	10k	1/16W
R785	NRSA63D-101X	M.G.RESISTOR	100	1/16W
R786	NRSA63D-101X	M.G.RESISTOR	100	1/16W
R787	NRSA63D-101X	M.G.RESISTOR	100	1/16W
R788	NRSA63D-103X	M.G.RESISTOR	10k	1/16W
R789	NRSA63D-103X	M.G.RESISTOR	10k	1/16W
R790	NRSA63D-101X	M.G.RESISTOR	100	1/16W
R791	NRSA63D-101X	M.G.RESISTOR	100	1/16W
R801	NRSA63D-822X	M.G.RESISTOR	8.2k	1/16W
R802	NRSA63D-822X	M.G.RESISTOR	8.2k	1/16W
R803	NRSA63D-182X	M.G.RESISTOR	1.8k	1/16W
R804	NRSA63D-182X	M.G.RESISTOR	1.8k	1/16W
R805	NRSA63D-103X	M.G.RESISTOR	10k	1/16W
R806	NRSA63D-103X	M.G.RESISTOR	10k	1/16W
R807	NRSA63D-103X	M.G.RESISTOR	10k	1/16W
R808	NRSA63D-103X	M.G.RESISTOR	10k	1/16W
R809	NRSA63D-103X	M.G.RESISTOR	10k	1/16W
R810	NRSA63D-103X	M.G.RESISTOR	10k	1/16W
R811	NRSA63D-103X	M.G.RESISTOR	10k	1/16W
R812	NRSA63D-103X	M.G.RESISTOR	10k	1/16W
R813	NRSA63D-103X	M.G.RESISTOR	10k	1/16W
R814	NRSA63D-103X	M.G.RESISTOR	10k	1/16W
R815	NRSA63D-330X	M.G.RESISTOR	33	1/16W
R816	NRSA63D-330X	M.G.RESISTOR	33	1/16W
R817	NRSA63D-330X	M.G.RESISTOR	33	1/16W
R818	NRSA63D-330X	M.G.RESISTOR	33	1/16W
R821	NRSA63D-473X	M.G.RESISTOR	47k	1/16W
R822	NRSA63D-473X	M.G.RESISTOR	47k	1/16W
R823	NRSA63D-220X	M.G.RESISTOR	22	1/16W
R824	NRSA63D-220X	M.G.RESISTOR	22	1/16W
R853	NRSA63J-0R0X	M.G.RESISTOR	0	1/16W
R854	NRSA63J-0R0X	M.G.RESISTOR	0	1/16W
R855	NRSA63J-0R0X	M.G.RESISTOR	0	1/16W
R877	NRSA63J-0R0X	M.G.RESISTOR	0	1/16W
R879	NRSA63J-0R0X	M.G.RESISTOR	0	1/16W
R901	NRSA63D-152X	M.G.RESISTOR	1.5k	1/16W
R902	NRSA63D-152X	M.G.RESISTOR	1.5k	1/16W
R903	NRSA63D-153X	M.G.RESISTOR	15k	1/16W
R904	NRSA63D-153X	M.G.RESISTOR	15k	1/16W
R905	NRSA63D-223X	M.G.RESISTOR	22k	1/16W
R906	NRSA63D-223X	M.G.RESISTOR	22k	1/16W
R907	NRSA63D-103X	M.G.RESISTOR	10k	1/16W
R908	NRSA63D-103X	M.G.RESISTOR	10k	1/16W
R909	NRSA63D-243X	M.G.RESISTOR	24k	1/16W
R910	NRSA63D-243X	M.G.RESISTOR	24k	1/16W
R911	NRSA63D-223X	M.G.RESISTOR	22k	1/16W
R912	NRSA63D-223X	M.G.RESISTOR	22k	1/16W
R913	NRSA63D-101X	M.G.RESISTOR	100	1/16W

[AUDIO&LCD]

Symbol No.	Part No.	Part Name	Description	
R914	NRSA63D-101X	M.G.RESISTOR	100	1/16W
R915	NRSA63D-124X	M.G.RESISTOR	120k	1/16W
R916	NRSA63D-124X	M.G.RESISTOR	120k	1/16W
R917	NRSA63D-103X	M.G.RESISTOR	10k	1/16W
R918	NRSA63D-103X	M.G.RESISTOR	10k	1/16W
R921	NRSA63D-223X	M.G.RESISTOR	22k	1/16W
R922	NRSA63D-223X	M.G.RESISTOR	22k	1/16W
R925	NRSA63D-561X	M.G.RESISTOR	560	1/16W
R926	NRSA63D-561X	M.G.RESISTOR	560	1/16W
R927	NRSA63D-103X	M.G.RESISTOR	10k	1/16W
R928	NRSA63D-103X	M.G.RESISTOR	10k	1/16W
R931	NRSA63J-0R0X	M.G.RESISTOR	0	1/16W
R932	NRSA63J-0R0X	M.G.RESISTOR	0	1/16W
R941	NRSA63D-393X	M.G.RESISTOR	39k	1/16W
R942	NRSA63D-393X	M.G.RESISTOR	39k	1/16W
R943	NRSA63D-822X	M.G.RESISTOR	8.2k	1/16W
R944	NRSA63D-822X	M.G.RESISTOR	8.2k	1/16W
R945	NRSA63J-105X	M.G.RESISTOR	1M	1/16W
R946	NRSA63J-105X	M.G.RESISTOR	1M	1/16W
R951	NRSA63D-113X	M.G.RESISTOR	11k	1/16W
R952	NRSA63D-113X	M.G.RESISTOR	11k	1/16W
R953	NRSA63D-912X	M.G.RESISTOR	9.1k	1/16W
R954	NRSA63D-912X	M.G.RESISTOR	9.1k	1/16W
R955	NRSA63J-0R0X	M.G.RESISTOR	0	1/16W
R956	NRSA63J-0R0X	M.G.RESISTOR	0	1/16W
R961	NRSA63D-103X	M.G.RESISTOR	10k	1/16W
R962	NRSA63D-103X	M.G.RESISTOR	10k	1/16W
R963	NRSA63D-103X	M.G.RESISTOR	10k	1/16W
R964	NRSA63D-103X	M.G.RESISTOR	10k	1/16W
R965	NRSA63D-103X	M.G.RESISTOR	10k	1/16W
R966	NRSA63D-103X	M.G.RESISTOR	10k	1/16W
R971	NRSA63D-104X	M.G.RESISTOR	100k	1/16W
R972	NRSA63D-104X	M.G.RESISTOR	100k	1/16W
R973	NRSA63D-104X	M.G.RESISTOR	100k	1/16W
R974	NRSA63D-104X	M.G.RESISTOR	100k	1/16W
R981	NRSA63D-392X	M.G.RESISTOR	3.9k	1/16W
R982	NRSA63D-392X	M.G.RESISTOR	3.9k	1/16W
R985	NRSA63J-4R7X	M.G.RESISTOR	4.7	1/16W
R986	NRSA63D-123X	M.G.RESISTOR	12k	1/16W
R987	NRSA63J-0R0X	M.G.RESISTOR	0	1/16W
R988	NRSA63D-474X	M.G.RESISTOR	470k	1/16W
R989	NRSA63D-560X	M.G.RESISTOR	56	1/16W
R990	NRS12BJ-681X	M.G.RESISTOR	680	1/2W
R991	NRSA63D-104X	M.G.RESISTOR	100k	1/16W
VR1	QVQ0162-A14	VAL.RESISTOR	10k	A1 REC LEVEL
VR2	QVQ0162-A14	VAL.RESISTOR	10k	A2 REC LEVEL
VR731	NVP1415-103X	TRIM.RESISTOR	10k	
VR732	NVP1415-103X	TRIM.RESISTOR	10k	
C1	NDC31HJ-221X	CER.CAPACITOR	220p	50V
C2	NDC31HJ-221X	CER.CAPACITOR	220p	50V
C3	NDC31HJ-221X	CER.CAPACITOR	220p	50V
C4	NDC31HJ-221X	CER.CAPACITOR	220p	50V
C5	NDC31HJ-221X	CER.CAPACITOR	220p	50V
C6	NDC31HJ-221X	CER.CAPACITOR	220p	50V
C7	NDC31HJ-221X	CER.CAPACITOR	220p	50V
C8	NDC31HJ-221X	CER.CAPACITOR	220p	50V
C11	NEH91HM-105X	E.CAPACITOR	1	50V
C12	NEH91HM-105X	E.CAPACITOR	1	50V
C13	NEH91HM-105X	E.CAPACITOR	1	50V
C14	NEH91HM-105X	E.CAPACITOR	1	50V
C15	NEN21HM-475X	N.P.CAPACITOR	4.7	50V
C16	NEN21HM-475X	N.P.CAPACITOR	4.7	50V
C17	NEN21HM-475X	N.P.CAPACITOR	4.7	50V
C18	NEN21HM-475X	N.P.CAPACITOR	4.7	50V
C33	NCB31CK-104X	CER.CAPACITOR	0.1	16V
C34	NCB31CK-104X	CER.CAPACITOR	0.1	16V
C37	NCB31CK-104X	CER.CAPACITOR	0.1	16V
C38	NCB31CK-104X	CER.CAPACITOR	0.1	16V
C39	NCB11CK-105X	CER.CAPACITOR	1	16V
C40	NCB11CK-105X	CER.CAPACITOR	1	16V

Symbol No.	Part No.	Part Name	Description	
C41	NCB11CK-105X	CER.CAPACITOR	1	16V
C42	NCB11CK-105X	CER.CAPACITOR	1	16V
C61	NDC31HJ-101X	CER.CAPACITOR	100p	50V
C62	NDC31HJ-101X	CER.CAPACITOR	100p	50V
C63	NDC31HJ-101X	CER.CAPACITOR	100p	50V
C64	NDC31HJ-101X	CER.CAPACITOR	100p	50V
C65	NDC31HJ-330X	CER.CAPACITOR	33p	50V
C66	NDC31HJ-330X	CER.CAPACITOR	33p	50V
C67	NCB31CK-104X	CER.CAPACITOR	0.1	16V
C68	NCB31CK-104X	CER.CAPACITOR	0.1	16V
C69	NBE41EM-475X	TAN.CAPACITOR	4.7	25V
C70	NBE41EM-475X	TAN.CAPACITOR	4.7	25V
C71	NCB31CK-104X	CER.CAPACITOR	0.1	16V
C72	NCB31CK-104X	CER.CAPACITOR	0.1	16V
C73	NBE41EM-475X	TAN.CAPACITOR	4.7	25V
C74	NBE41EM-475X	TAN.CAPACITOR	4.7	25V
C75	NCB31CK-104X	CER.CAPACITOR	0.1	16V
C76	NCB31CK-104X	CER.CAPACITOR	0.1	16V
C81	NCB31CK-104X	CER.CAPACITOR	0.1	16V
C82	NCB31CK-104X	CER.CAPACITOR	0.1	16V
C83	NFV41HJ-333X	FILM CAPACITOR	0.033	50V
C84	NFV41HJ-333X	FILM CAPACITOR	0.033	50V
C85	NBE71CM-476X	TAN.CAPACITOR	47	16V
C86	NBE71CM-476X	TAN.CAPACITOR	47	16V
C89	NDC31HJ-330X	CER.CAPACITOR	33p	50V
C90	NDC31HJ-330X	CER.CAPACITOR	33p	50V
C91	NBE41EM-475X	TAN.CAPACITOR	4.7	25V
C92	NBE41EM-475X	TAN.CAPACITOR	4.7	25V
C93	NBE41EM-475X	TAN.CAPACITOR	4.7	25V
C94	NBE41EM-475X	TAN.CAPACITOR	4.7	25V
C95	NCB31CK-104X	CER.CAPACITOR	0.1	16V
C96	NCB31CK-104X	CER.CAPACITOR	0.1	16V
C97	NCB31CK-104X	CER.CAPACITOR	0.1	16V
C98	NCB31CK-104X	CER.CAPACITOR	0.1	16V
C99	NDC31HJ-101X	CER.CAPACITOR	100p	50V
C100	NDC31HJ-101X	CER.CAPACITOR	100p	50V
C101	NCB11CK-105X	CER.CAPACITOR	1	16V
C102	NCB11CK-105X	CER.CAPACITOR	1	16V
C103	NBE41EM-475X	TAN.CAPACITOR	4.7	25V
C104	NBE41EM-475X	TAN.CAPACITOR	4.7	25V
C105	NBE41EM-475X	TAN.CAPACITOR	4.7	25V
C106	NBE41EM-475X	TAN.CAPACITOR	4.7	25V
C107	NCB31CK-104X	CER.CAPACITOR	0.1	16V
C108	NCB31CK-104X	CER.CAPACITOR	0.1	16V
C109	NCB31CK-104X	CER.CAPACITOR	0.1	16V
C110	NCB31CK-104X	CER.CAPACITOR	0.1	16V
C111	NDC31HJ-330X	CER.CAPACITOR	33p	50V
C112	NDC31HJ-330X	CER.CAPACITOR	33p	50V
C113	NEN21HM-105	N.P.CAPACITOR	1	50V
C114	NEN21HM-105	N.P.CAPACITOR	1	50V
C115	NBE61EM-226X	TAN.CAPACITOR	22	25V
C116	NBE61EM-226X	TAN.CAPACITOR	22	25V
C117	NBE51EM-106X	TAN.CAPACITOR	10	25V
C118	NBE51EM-106X	TAN.CAPACITOR	10	25V
C119	NCB31CK-104X	CER.CAPACITOR	0.1	16V
C120	NCB31CK-104X	CER.CAPACITOR	0.1	16V
C121	NDC31HJ-101X	CER.CAPACITOR	100p	50V
C122	NDC31HJ-101X	CER.CAPACITOR	100p	50V
C123	NBE41CM-106X	TAN.CAPACITOR	10	16V
C124	NBE41CM-106X	TAN.CAPACITOR	10	16V
C125	NDC31HJ-330X	CER.CAPACITOR	33p	50V
C126	NDC31HJ-330X	CER.CAPACITOR	33p	50V
C127	NCB31CK-104X	CER.CAPACITOR	0.1	16V
C128	NCB31CK-104X	CER.CAPACITOR	0.1	16V
C129	NCB31CK-104X	CER.CAPACITOR	0.1	16V
C130	NCB31CK-104X	CER.CAPACITOR	0.1	16V
C131	NBE41EM-475X	TAN.CAPACITOR	4.7	25V
C132	NBE41EM-475X	TAN.CAPACITOR	4.7	25V
C133	NBE41EM-475X	TAN.CAPACITOR	4.7	25V
C134	NBE41EM-475X	TAN.CAPACITOR	4.7	25V
C135	NBE41CM-106X	TAN.CAPACITOR	10	16V
C136	NBE41CM-106X	TAN.CAPACITOR	10	16V
C139	NDC31HJ-100X	CER.CAPACITOR	10p	50V

Symbol No.	Part No.	Part Name	Description	
C140	NDC31HJ-100X	CER.CAPACITOR	10p	50V
C141	NEH60JM-107X	E.CAPACITOR	100	6.3V
C142	NEH60JM-107X	E.CAPACITOR	100	6.3V
C143	NEH60JM-107X	E.CAPACITOR	100	6.3V
C144	NEH60JM-107X	E.CAPACITOR	100	6.3V
C145	NDC31HJ-100X	CER.CAPACITOR	10p	50V
C146	NDC31HJ-100X	CER.CAPACITOR	10p	50V
C147	NDC31HJ-101X	CER.CAPACITOR	100p	50V
C148	NDC31HJ-101X	CER.CAPACITOR	100p	50V
C149	NBE51CM-226X	TAN.CAPACITOR	22	16V
C150	NBE51CM-226X	TAN.CAPACITOR	22	16V
C151	NBE71CM-476X	TAN.CAPACITOR	47	16V
C152	NBE71CM-476X	TAN.CAPACITOR	47	16V
C153	NBE51EM-106X	TAN.CAPACITOR	10	25V
C154	NBE51EM-106X	TAN.CAPACITOR	10	25V
C155	NCB31CK-223X	CER.CAPACITOR	0.022	16V
C156	NCB31CK-223X	CER.CAPACITOR	0.022	16V
C157	NDC31HJ-471X	CER.CAPACITOR	470p	50V
C158	NDC31HJ-471X	CER.CAPACITOR	470p	50V
C159	NBE41CM-106X	TAN.CAPACITOR	10	16V
C160	NBE41CM-106X	TAN.CAPACITOR	10	16V
C161	NDC31HJ-330X	CER.CAPACITOR	33p	50V
C162	NDC31HJ-330X	CER.CAPACITOR	33p	50V
C163	NCB11CK-105X	CER.CAPACITOR	1	16V
C164	NCB11CK-105X	CER.CAPACITOR	1	16V
C167	NEH91CM-476X	E.CAPACITOR	47	16V
C168	NEH91CM-476X	E.CAPACITOR	47	16V
C171	NBE41CM-106X	TAN.CAPACITOR	10	16V
C172	NBE41CM-106X	TAN.CAPACITOR	10	16V
C177	NCB31CK-104X	CER.CAPACITOR	0.1	16V
C178	NCB31CK-104X	CER.CAPACITOR	0.1	16V
C179	NBE41EM-475X	TAN.CAPACITOR	4.7	25V
C180	NBE41EM-475X	TAN.CAPACITOR	4.7	25V
C181	NCB31CK-104X	CER.CAPACITOR	0.1	16V
C182	NCB31CK-104X	CER.CAPACITOR	0.1	16V
C183	NBE41EM-475X	TAN.CAPACITOR	4.7	25V
C184	NBE41EM-475X	TAN.CAPACITOR	4.7	25V
C185	NBE61EM-226X	TAN.CAPACITOR	22	25V
C186	NBE71CM-476X	TAN.CAPACITOR	47	16V
C187	NCB31CK-104X	CER.CAPACITOR	0.1	16V
C188	NCB31CK-104X	CER.CAPACITOR	0.1	16V
C189	NBE51AM-476X	TAN.CAPACITOR	47	10V
C190	NBE51AM-476X	TAN.CAPACITOR	47	10V
C191	NDC31HJ-330X	CER.CAPACITOR	33p	50V
C192	NDC31HJ-330X	CER.CAPACITOR	33p	50V
C193	NDC31HJ-330X	CER.CAPACITOR	33p	50V
C194	NDC31HJ-330X	CER.CAPACITOR	33p	50V
C301	NCB31CK-104X	CER.CAPACITOR	0.1	16V
C302	NCB31CK-104X	CER.CAPACITOR	0.1	16V
C303	NCB31CK-104X	CER.CAPACITOR	0.1	16V
C304	NCB31CK-104X	CER.CAPACITOR	0.1	16V
C305	NCB11CK-105X	CER.CAPACITOR	1	16V
C306	NCB11CK-105X	CER.CAPACITOR	1	16V
C307	NBE41EM-475X	TAN.CAPACITOR	4.7	25V
C308	NBE41EM-475X	TAN.CAPACITOR	4.7	25V
C309	NBE41EM-475X	TAN.CAPACITOR	4.7	25V
C310	NBE41EM-475X	TAN.CAPACITOR	4.7	25V
C311	NCB31CK-104X	CER.CAPACITOR	0.1	16V
C312	NCB31CK-104X	CER.CAPACITOR	0.1	16V
C313	NCB31CK-104X	CER.CAPACITOR	0.1	16V
C314	NCB31CK-104X	CER.CAPACITOR	0.1	16V
C315	NDC31HJ-330X	CER.CAPACITOR	33p	50V
C316	NDC31HJ-330X	CER.CAPACITOR	33p	50V
C317	NEN21HM-105	N.P.CAPACITOR	1	50V
C318	NEN21HM-105	N.P.CAPACITOR	1	50V
C319	NBE61EM-226X	TAN.CAPACITOR	22	25V
C320	NBE61EM-226X	TAN.CAPACITOR	22	25V
C321	NBE51EM-106X	TAN.CAPACITOR	10	25V
C322	NBE51EM-106X	TAN.CAPACITOR	10	25V
C323	NCB31CK-104X	CER.CAPACITOR	0.1	16V
C324	NCB31CK-104X	CER.CAPACITOR	0.1	16V
C325	NDC31HJ-101X	CER.CAPACITOR	100p	50V
C326	NDC31HJ-101X	CER.CAPACITOR	100p	50V

Symbol No.	Part No.	Part Name	Description	
C327	NBE41CM-106X	TAN.CAPACITOR	10	16V
C328	NBE41CM-106X	TAN.CAPACITOR	10	16V
C329	NDC31HJ-330X	CER.CAPACITOR	33p	50V
C330	NDC31HJ-330X	CER.CAPACITOR	33p	50V
C331	NCB31CK-104X	CER.CAPACITOR	0.1	16V
C332	NCB31CK-104X	CER.CAPACITOR	0.1	16V
C333	NCB31CK-104X	CER.CAPACITOR	0.1	16V
C334	NCB31CK-104X	CER.CAPACITOR	0.1	16V
C335	NBE41EM-475X	TAN.CAPACITOR	4.7	25V
C336	NBE41EM-475X	TAN.CAPACITOR	4.7	25V
C337	NBE41EM-475X	TAN.CAPACITOR	4.7	25V
C338	NBE41EM-475X	TAN.CAPACITOR	4.7	25V
C339	NBE41CM-106X	TAN.CAPACITOR	10	16V
C340	NBE41CM-106X	TAN.CAPACITOR	10	16V
C343	NDC31HJ-100X	CER.CAPACITOR	10p	50V
C344	NDC31HJ-100X	CER.CAPACITOR	10p	50V
C345	NEH60JM-107X	E.CAPACITOR	100	6.3V
C346	NEH60JM-107X	E.CAPACITOR	100	6.3V
C347	NEH60JM-107X	E.CAPACITOR	100	6.3V
C348	NEH60JM-107X	E.CAPACITOR	100	6.3V
C349	NDC31HJ-100X	CER.CAPACITOR	10p	50V
C350	NDC31HJ-100X	CER.CAPACITOR	10p	50V
C351	NDC31HJ-101X	CER.CAPACITOR	100p	50V
C352	NDC31HJ-101X	CER.CAPACITOR	100p	50V
C353	NBE51CM-226X	TAN.CAPACITOR	22	16V
C354	NBE51CM-226X	TAN.CAPACITOR	22	16V
C355	NBE71CM-476X	TAN.CAPACITOR	47	16V
C356	NBE71CM-476X	TAN.CAPACITOR	47	16V
C357	NBE51EM-106X	TAN.CAPACITOR	10	25V
C358	NBE51EM-106X	TAN.CAPACITOR	10	25V
C359	NCB31CK-223X	CER.CAPACITOR	0.022	16V
C360	NCB31CK-223X	CER.CAPACITOR	0.022	16V
C361	NDC31HJ-471X	CER.CAPACITOR	470p	50V
C362	NDC31HJ-471X	CER.CAPACITOR	470p	50V
C363	NBE41CM-106X	TAN.CAPACITOR	10	16V
C364	NBE41CM-106X	TAN.CAPACITOR	10	16V
C365	NDC31HJ-330X	CER.CAPACITOR	33p	50V
C366	NDC31HJ-330X	CER.CAPACITOR	33p	50V
C367	NCB11CK-105X	CER.CAPACITOR	1	16V
C368	NCB11CK-105X	CER.CAPACITOR	1	16V
C371	NBE41CM-106X	TAN.CAPACITOR	10	16V
C372	NBE41CM-106X	TAN.CAPACITOR	10	16V
C377	NCB11CK-105X	CER.CAPACITOR	1	16V
C378	NCB11CK-105X	CER.CAPACITOR	1	16V
C379	NCB11CK-105X	CER.CAPACITOR	1	16V
C380	NCB11CK-105X	CER.CAPACITOR	1	16V
C381	NBE41EM-475X	TAN.CAPACITOR	4.7	25V
C382	NBE41EM-475X	TAN.CAPACITOR	4.7	25V
C383	NCB31CK-104X	CER.CAPACITOR	0.1	16V
C384	NCB31CK-104X	CER.CAPACITOR	0.1	16V
C385	NBE41EM-475X	TAN.CAPACITOR	4.7	25V
C386	NBE41EM-475X	TAN.CAPACITOR	4.7	25V
C387	NCB31CK-104X	CER.CAPACITOR	0.1	16V
C388	NCB31CK-104X	CER.CAPACITOR	0.1	16V
C389	NCB31CK-104X	CER.CAPACITOR	0.1	16V
C390	NCB31CK-104X	CER.CAPACITOR	0.1	16V
C391	NBE61EM-226X	TAN.CAPACITOR	22	25V
C392	NBE71CM-476X	TAN.CAPACITOR	47	16V
C393	NBE51AM-476X	TAN.CAPACITOR	47	10V
C394	NBE51AM-476X	TAN.CAPACITOR	47	10V
C395	NDC31HJ-330X	CER.CAPACITOR	33p	50V
C396	NDC31HJ-330X	CER.CAPACITOR	33p	50V
C397	NDC31HJ-330X	CER.CAPACITOR	33p	50V
C398	NDC31HJ-330X	CER.CAPACITOR	33p	50V
C401	NCB31CK-104X	CER.CAPACITOR	0.1	16V
C402	NCB31CK-104X	CER.CAPACITOR	0.1	16V
C403	NCB31CK-104X	CER.CAPACITOR	0.1	16V
C409	NBE51AM-476X	TAN.CAPACITOR	47	10V
C410	NCB31CK-104X	CER.CAPACITOR	0.1	16V
C411	NCB10JM-335X	CER.CAPACITOR	3.3	6.3V
C412	NCB31CK-104X	CER.CAPACITOR	0.1	16V
C413	NCB31CK-104X	CER.CAPACITOR	0.1	16V

[AUDIO&LCD]

Symbol No.	Part No.	Part Name	Description
C414	NEH91CM-476X	E.CAPACITOR	47 16V
C415	NCB31CK-104X	CER.CAPACITOR	0.1 16V
C416	NCB31HK-122X	CER.CAPACITOR	1200p 50V
C417	NCB31CK-104X	CER.CAPACITOR	0.1 16V
C418	NCB31HK-103X	CER.CAPACITOR	0.01 50V
C419	NCB31CK-104X	CER.CAPACITOR	0.1 16V
C420	NCB31CK-104X	CER.CAPACITOR	0.1 16V
C421	NDC31HJ-331X	CER.CAPACITOR	330p 50V
C422	NCB31CK-104X	CER.CAPACITOR	0.1 16V
C431	NCB31CK-104X	CER.CAPACITOR	0.1 16V
C432	NCB31CK-104X	CER.CAPACITOR	0.1 16V
C433	NCB31CK-104X	CER.CAPACITOR	0.1 16V
C434	NCB11CK-105X	CER.CAPACITOR	1 16V
C435	NEH91CM-106X	E.CAPACITOR	10 16V
C436	NCB31CK-104X	CER.CAPACITOR	0.1 16V
C437	QEZ0243-22A	E.CAPACITOR	
C438	NEH91CM-106X	E.CAPACITOR	10 16V
C439	NCF21CZ-334X	CER.CAPACITOR	0.33 16V
C440	NCB10JM-335X	CER.CAPACITOR	3.3 6.3V
C442	NCB10JM-335X	CER.CAPACITOR	3.3 6.3V
C444	NEH91EM-336X	E.CAPACITOR	33 25V
C446	NCB31CK-104X	CER.CAPACITOR	0.1 16V
C447	NCB31CK-104X	CER.CAPACITOR	0.1 16V
C448	NCB31CK-104X	CER.CAPACITOR	0.1 16V
C449	NDC31HJ-180X	CER.CAPACITOR	18p 50V
C450	NDC31HJ-150X	CER.CAPACITOR	15p 50V
C451	NDC31HJ-150X	CER.CAPACITOR	15p 50V
C452	NDC31HJ-150X	CER.CAPACITOR	15p 50V
C701	NBE41CM-106X	TAN.CAPACITOR	10 16V
C702	NBE41CM-106X	TAN.CAPACITOR	10 16V
C711	NDC31HJ-101X	CER.CAPACITOR	100p 50V
C712	NCB31CK-104X	CER.CAPACITOR	0.1 16V
C713	NDC31HJ-101X	CER.CAPACITOR	100p 50V
C739	NDC31HJ-680X	CER.CAPACITOR	68p 50V
C740	NDC31HJ-680X	CER.CAPACITOR	68p 50V
C741	NCB31HK-102X	CER.CAPACITOR	1000p 50V
C742	NCB31HK-102X	CER.CAPACITOR	1000p 50V
C743	NDC31HJ-101X	CER.CAPACITOR	100p 50V
C744	NDC31HJ-101X	CER.CAPACITOR	100p 50V
C745	NBE51EM-106X	TAN.CAPACITOR	10 25V
C746	NBE51EM-106X	TAN.CAPACITOR	10 25V
C747	NBE51EM-106X	TAN.CAPACITOR	10 25V
C748	NBE51EM-106X	TAN.CAPACITOR	10 25V
C749	NCB31CK-104X	CER.CAPACITOR	0.1 16V
C750	NCB31CK-104X	CER.CAPACITOR	0.1 16V
C751	NCB31CK-104X	CER.CAPACITOR	0.1 16V
C752	NCB31CK-104X	CER.CAPACITOR	0.1 16V
C755	NCB31HK-222X	CER.CAPACITOR	2200p 50V
C757	NBE61EM-226X	TAN.CAPACITOR	22 25V
C758	NBE61EM-226X	TAN.CAPACITOR	22 25V
C759	NBE51EM-106X	TAN.CAPACITOR	10 25V
C774	NCB31CK-104X	CER.CAPACITOR	0.1 16V
C775	NCB31HK-102X	CER.CAPACITOR	1000p 50V
C801	NCB31CK-104X	CER.CAPACITOR	0.1 16V
C802	NCB31CK-104X	CER.CAPACITOR	0.1 16V
C803	NBE51EM-106X	TAN.CAPACITOR	10 25V
C804	NBE51EM-106X	TAN.CAPACITOR	10 25V
C805	NCB31CK-104X	CER.CAPACITOR	0.1 16V
C806	NCB31CK-104X	CER.CAPACITOR	0.1 16V
C807	NCB31CK-104X	CER.CAPACITOR	0.1 16V
C808	NCB31CK-104X	CER.CAPACITOR	0.1 16V
C809	NBE51EM-106X	TAN.CAPACITOR	10 25V
C810	NBE51EM-106X	TAN.CAPACITOR	10 25V
C811	NCB31CK-104X	CER.CAPACITOR	0.1 16V
C812	NCB31CK-104X	CER.CAPACITOR	0.1 16V
C813	NBE51EM-106X	TAN.CAPACITOR	10 25V
C814	NBE51EM-106X	TAN.CAPACITOR	10 25V
C815	NCB31CK-104X	CER.CAPACITOR	0.1 16V
C816	NCB31CK-104X	CER.CAPACITOR	0.1 16V
C817	NBE51CM-226X	TAN.CAPACITOR	22 16V
C818	NEH91EM-336X	E.CAPACITOR	33 25V
C851	NDC31HJ-330X	CER.CAPACITOR	33p 50V
C852	NDC31HJ-330X	CER.CAPACITOR	33p 50V

Symbol No.	Part No.	Part Name	Description
C853	NDC31HJ-330X	CER.CAPACITOR	33p 50V
C854	NDC31HJ-330X	CER.CAPACITOR	33p 50V
C855	NCB31CK-104X	CER.CAPACITOR	0.1 16V
C856	NCB31CK-104X	CER.CAPACITOR	0.1 16V
C857	NCB31CK-104X	CER.CAPACITOR	0.1 16V
C858	NCB31CK-104X	CER.CAPACITOR	0.1 16V
C861	NBE51EM-106X	TAN.CAPACITOR	10 25V
C862	NBE51EM-106X	TAN.CAPACITOR	10 25V
C863	NBE51EM-106X	TAN.CAPACITOR	10 25V
C864	NBE51EM-106X	TAN.CAPACITOR	10 25V
C865	NCB31CK-104X	CER.CAPACITOR	0.1 16V
C866	NCB31CK-104X	CER.CAPACITOR	0.1 16V
C867	NCB31CK-104X	CER.CAPACITOR	0.1 16V
C868	NCB31CK-104X	CER.CAPACITOR	0.1 16V
C901	NBE41CM-106X	TAN.CAPACITOR	10 16V
C902	NBE41CM-106X	TAN.CAPACITOR	10 16V
C903	NCB11CK-105X	CER.CAPACITOR	1 16V
C904	NCB11CK-105X	CER.CAPACITOR	1 16V
C905	NCB11CK-105X	CER.CAPACITOR	1 16V
C906	NCB11CK-105X	CER.CAPACITOR	1 16V
C907	NBE41EM-475X	TAN.CAPACITOR	4.7 25V
C908	NBE41EM-475X	TAN.CAPACITOR	4.7 25V
C909	NBE41EM-475X	TAN.CAPACITOR	4.7 25V
C910	NBE41EM-475X	TAN.CAPACITOR	4.7 25V
C911	NDC31HJ-821X	CER.CAPACITOR	820p 50V
C912	NDC31HJ-821X	CER.CAPACITOR	820p 50V
C913	NBE41EM-475X	TAN.CAPACITOR	4.7 25V
C914	NBE41EM-475X	TAN.CAPACITOR	4.7 25V
C915	NDC31HJ-680X	CER.CAPACITOR	68p 50V
C916	NDC31HJ-680X	CER.CAPACITOR	68p 50V
C917	NBE71CM-476X	TAN.CAPACITOR	47 16V
C918	NBE71CM-476X	TAN.CAPACITOR	47 16V
C919	NBE71CM-476X	TAN.CAPACITOR	47 16V
C920	NBE71CM-476X	TAN.CAPACITOR	47 16V
C921	NFV41HJ-273X	FILM CAPACITOR	0.027 50V
C922	NFV41HJ-273X	FILM CAPACITOR	0.027 50V
C923	NBE61EM-226X	TAN.CAPACITOR	22 25V
C924	NBE61EM-226X	TAN.CAPACITOR	22 25V
C925	NBE21CM-475X	TAN.CAPACITOR	4.7 16V
C926	NBE21CM-475X	TAN.CAPACITOR	4.7 16V
C927	NCB31CK-104X	CER.CAPACITOR	0.1 16V
C928	NCB31CK-104X	CER.CAPACITOR	0.1 16V
C929	NCB31CK-104X	CER.CAPACITOR	0.1 16V
C930	NCB31CK-104X	CER.CAPACITOR	0.1 16V
C931	NBE41EM-475X	TAN.CAPACITOR	4.7 25V
C932	NBE41EM-475X	TAN.CAPACITOR	4.7 25V
C933	NCB31CK-104X	CER.CAPACITOR	0.1 16V
C934	NCB31CK-104X	CER.CAPACITOR	0.1 16V
C935	NDC31HJ-101X	CER.CAPACITOR	100p 50V
C936	NDC31HJ-101X	CER.CAPACITOR	100p 50V
C937	NCB11CK-105X	CER.CAPACITOR	1 16V
C938	NCB11CK-105X	CER.CAPACITOR	1 16V
C941	NBE41CM-106X	TAN.CAPACITOR	10 16V
C942	NBE41CM-106X	TAN.CAPACITOR	10 16V
C943	NBE51CM-226X	TAN.CAPACITOR	22 16V
C944	NBE51CM-226X	TAN.CAPACITOR	22 16V
C947	NFV41HJ-222X	FILM CAPACITOR	2200p 50V
C948	NFV41HJ-222X	FILM CAPACITOR	2200p 50V
C949	NCB11CK-105X	CER.CAPACITOR	1 16V
C950	NCB11CK-105X	CER.CAPACITOR	1 16V
C951	NBE41EM-475X	TAN.CAPACITOR	4.7 25V
C952	NBE41EM-475X	TAN.CAPACITOR	4.7 25V
C953	NBE41EM-475X	TAN.CAPACITOR	4.7 25V
C954	NBE41EM-475X	TAN.CAPACITOR	4.7 25V
C955	NCB31CK-104X	CER.CAPACITOR	0.1 16V
C956	NCB31CK-104X	CER.CAPACITOR	0.1 16V
C957	NCB31CK-104X	CER.CAPACITOR	0.1 16V
C958	NCB31CK-104X	CER.CAPACITOR	0.1 16V
C961	NDC31HJ-181X	CER.CAPACITOR	180p 50V
C962	NDC31HJ-181X	CER.CAPACITOR	180p 50V
C963	NDC31HJ-561X	CER.CAPACITOR	560p 50V
C964	NFV41HJ-823X	FILM CAPACITOR	0.082 50V
C965	NFV41HJ-823X	FILM CAPACITOR	0.082 50V

Symbol No.	Part No.	Part Name	Description
C966	NCB31HK-392X	CER.CAPACITOR	3900p 50V
C967	NBE51EM-106X	TAN.CAPACITOR	10 25V
C968	NBE61EM-226X	TAN.CAPACITOR	22 25V
C971	NCB11CK-105X	CER.CAPACITOR	1 16V
C972	NCB11CK-105X	CER.CAPACITOR	1 16V
C973	NDC31HJ-330X	CER.CAPACITOR	33p 50V
C974	NDC31HJ-330X	CER.CAPACITOR	33p 50V
C975	NDC31HJ-330X	CER.CAPACITOR	33p 50V
C976	NDC31HJ-330X	CER.CAPACITOR	33p 50V
C981	NDC31HJ-330X	CER.CAPACITOR	33p 50V
C982	NDC31HJ-330X	CER.CAPACITOR	33p 50V
L1	NQL124J-100X	COIL	10uH
L2	NQL124J-100X	COIL	10uH
L3	NQL124J-100X	COIL	10uH
L4	NQL124J-100X	COIL	10uH
L401	NQL114K-100X	COIL	10uH
L403	NQL114K-100X	COIL	10uH
L404	NQL114K-100X	COIL	10uH
L405	NQL114K-100X	COIL	10uH
L801	NQL114K-220X	COIL	22uH
L802	NQL114K-220X	COIL	22uH
L803	NQL114K-100X	COIL	10uH
L804	NQL114K-100X	COIL	10uH
L805	NQL114K-220X	COIL	22uH
L806	NQL114K-220X	COIL	22uH
L807	NQL114K-220X	COIL	22uH
L808	NQL114K-220X	COIL	22uH
L809	NQL114K-220X	COIL	22uH
L810	NQL114K-220X	COIL	22uH
LC801	PGZ01972Z	LC FILTER	LC801-810
X401	NAX0065-001X	CRYSTAL	4.9152MHz
X402	NAX0074-001X	CRYSTAL	32.768MHz
S1	QSW0334-001	SLIDE SWITCH	ALC A1
S2	QSW0334-001	SLIDE SWITCH	ALC A2
S301	QSW0334-001	SLIDE SWITCH	ALC M1
S302	QSW0334-001	SLIDE SWITCH	ALC M2
S303	QSW0334-001	SLIDE SWITCH	3PIN MIC SW (E)
S401	QSW0334-001	SLIDE SWITCH	LIGHT
S402	QSW0334-001	SLIDE SWITCH	REGEN/PRESET
S403	QSW0334-001	SLIDE SWITCH	FREE/REC
S404	QSW0334-001	SLIDE SWITCH	OPTION/TC
S405	QSW0340-001	SLIDE SWITCH	UB/TC/CTL
S406	NSW0005-001X	TACT SWITCH	HOLD
S407	NSW0005-001X	TACT SWITCH	SHIFT
S408	NSW0005-001X	TACT SWITCH	ADVANCE
S409	NSW0005-001X	TACT SWITCH	PRESET
S410	NSW0005-001X	TACT SWITCH	RESET
S411	NSW0005-001X	TACT SWITCH	MENU
S412	QSW0334-001	SLIDE SWITCH	DA1/2 DA3/4
CN15	QGA1201F2-12X	CONNECTOR	12PIN
CN30	QGF1012F1-10X	CONNECTOR	10PIN
CN31	QGA1201F2-09X	CONNECTOR	9PIN
CN33	QGA1501F2-06W	CONNECTOR	6PIN
CN35	QGA1201F2-05X	CONNECTOR	5PIN
CN36	QGA1201F2-05X	CONNECTOR	5PIN
CN37	QGA1501F2-04W	CONNECTOR	4PIN
CN38	QGA1501F2-02W	CONNECTOR	2PIN
CN39	QGA1201F2-05X	CONNECTOR	5PIN
CN40	QGA1201F2-03X	CONNECTOR	3PIN
CN42	QGA1201F2-10X	CONNECTOR	10PIN
CN43	QGF1012F1-18X	CONNECTOR	18PIN
CN44	QGF1012F1-14X	CONNECTOR	14PIN
CN45	QGA1201F2-04X	CONNECTOR	4PIN
CN55	PGZ01932-012Z	CONNECTOR	12PIN

Symbol No.	Part No.	Part Name	Description
TP1	NNZ0009-001X	TEST POINT	TP1-911
K1	NQR0292-001X	FERAITE BEAD	K1-4,701
K401	PGZ00627Z	FERRATE BEADS	K401-407
T901	NQR0185-001X	BIAS OSC COIL	
TB1	SQMX002-001Z	TERMINAL	TB1,401
TB2	PGZ02228	EARTH LUG	
SP1	SC43656-095	LED SPACER	FOR LD401
PW1	SCK2571-01-N1A	AUDIO-SUB BOARD ASSEMBLY	(U)
R1	NRSA63J-0R0X	M.G.RESISTOR	0 1/16W (U
CN101	QGA1201F2-06X	CONNECTOR	6PIN (U)

Note: The AUDIO & LCD board assembly SCK2587-01-U0A will be included the circuit of AUDIO-SUB board assembly in the future production.

6.9 PR BOARD ASSEMBLY PARTS LIST [0][9]

SCK2535-01-00A [0][9]□□□□□□

Symbol No.	Part No.	Part Name	Description	
IC101	AN3730FA	I.C.(M)	MATSUSHITA	
IC201	AN3730FA	I.C.(M)	MATSUSHITA	
IC202	AN77L03M-X	I.C.(M)	MATSUSHITA	
IC203	DS90LV032TM-X	I.C.(M)	NATIONAL SEMICO	
IC204	TC74VHC4040FT-X	I.C.(M)	TOSHIBA	
IC205	TC74VHC153FT-X	I.C.(M)	TOSHIBA	
Q101	XN4504-W	TRANSISTOR	MATSUSHITA	
Q102	2SA1462/3-4/-X	TRANSISTOR	NEC	
Q103	2SC3937-X	TRANSISTOR	MATSUSHITA	
Q104	XN4504-W	TRANSISTOR	MATSUSHITA	
Q105	2SA1462/3-4/-X	TRANSISTOR	NEC	
Q106	2SC3937-X	TRANSISTOR	MATSUSHITA	
Q201	XN4504-W	TRANSISTOR	MATSUSHITA	
Q202	2SA1462/3-4/-X	TRANSISTOR	NEC	
Q203	2SC3937-X	TRANSISTOR	MATSUSHITA	
Q204	XN4504-W	TRANSISTOR	MATSUSHITA	
Q205	2SA1462/3-4/-X	TRANSISTOR	NEC	
Q206	2SC3937-X	TRANSISTOR	MATSUSHITA	
Q209	2SA1577/QR/-X	TRANSISTOR	ROHM	
Q210	DTC114EUA-X	TRANSISTOR	ROHM	
Q301	2SK621-X	FET	MATSUSHITA	
Q302	2SK621-X	FET	MATSUSHITA	
Q303	2SA1037AK/QR/-X	TRANSISTOR	ROHM	
Q304	2SA1037AK/QR/-X	TRANSISTOR	ROHM	
Q305	2SC3735/4-5/-X	TRANSISTOR	NEC	
Q306	2SC3735/4-5/-X	TRANSISTOR	NEC	
Q307	2SC3735/4-5/-X	TRANSISTOR	NEC	
Q308	2SC3735/4-5/-X	TRANSISTOR	NEC	
R101	NRSA63D-202X	M.G.RESISTOR	2k	1/16W
R102	NRSA63D-682X	M.G.RESISTOR	6.8k	1/16W
R103	NRSA63D-182X	M.G.RESISTOR	1.8k	1/16W
R104	NRSA63D-561X	M.G.RESISTOR	560	1/16W
R106	NRSA63D-102X	M.G.RESISTOR	1k	1/16W
R107	NRSA63D-331X	M.G.RESISTOR	330	1/16W
R108	NRSA63D-102X	M.G.RESISTOR	1k	1/16W
R109	NRSA63D-152X	M.G.RESISTOR	1.5k	1/16W
R110	NRSA63D-152X	M.G.RESISTOR	1.5k	1/16W
R111	NRSA63D-152X	M.G.RESISTOR	1.5k	1/16W
R112	NRSA63D-153X	M.G.RESISTOR	15k	1/16W
R113	NRSA63D-681X	M.G.RESISTOR	680	1/16W
R116	NRSA63D-681X	M.G.RESISTOR	680	1/16W
R117	NRSA63D-152X	M.G.RESISTOR	1.5k	1/16W
R118	NRSA63D-153X	M.G.RESISTOR	15k	1/16W
R119	NRSA63D-152X	M.G.RESISTOR	1.5k	1/16W
R120	NRSA63D-152X	M.G.RESISTOR	1.5k	1/16W
R121	NRSA63D-102X	M.G.RESISTOR	1k	1/16W
R122	NRSA63D-331X	M.G.RESISTOR	330	1/16W
R123	NRSA63D-102X	M.G.RESISTOR	1k	1/16W
R126	NRSA63D-103X	M.G.RESISTOR	10k	1/16W
R127	NRSA63D-272X	M.G.RESISTOR	2.7k	1/16W
R128	NRSA63D-223X	M.G.RESISTOR	22k	1/16W
R129	NRSA63D-222X	M.G.RESISTOR	2.2k	1/16W
R131	NRSA63D-221X	M.G.RESISTOR	220	1/16W
R132	NRSA63D-221X	M.G.RESISTOR	220	1/16W
R135	NRSA63D-151X	M.G.RESISTOR	150	1/16W
R138	NRSA63D-151X	M.G.RESISTOR	150	1/16W
R201	NRSA63D-202X	M.G.RESISTOR	2k	1/16W
R202	NRSA63D-682X	M.G.RESISTOR	6.8k	1/16W
R203	NRSA63D-182X	M.G.RESISTOR	1.8k	1/16W
R204	NRSA63D-561X	M.G.RESISTOR	560	1/16W
R206	NRSA63D-102X	M.G.RESISTOR	1k	1/16W
R207	NRSA63D-331X	M.G.RESISTOR	330	1/16W
R208	NRSA63D-102X	M.G.RESISTOR	1k	1/16W
R209	NRSA63D-152X	M.G.RESISTOR	1.5k	1/16W
R210	NRSA63D-152X	M.G.RESISTOR	1.5k	1/16W
R211	NRSA63D-152X	M.G.RESISTOR	1.5k	1/16W
R212	NRSA63D-153X	M.G.RESISTOR	15k	1/16W
R213	NRSA63D-681X	M.G.RESISTOR	680	1/16W
R216	NRSA63D-681X	M.G.RESISTOR	680	1/16W
R217	NRSA63D-152X	M.G.RESISTOR	1.5k	1/16W

Symbol No.	Part No.	Part Name	Description	
R218	NRSA63D-153X	M.G.RESISTOR	15k	1/16W
R219	NRSA63D-152X	M.G.RESISTOR	1.5k	1/16W
R220	NRSA63D-152X	M.G.RESISTOR	1.5k	1/16W
R221	NRSA63D-102X	M.G.RESISTOR	1k	1/16W
R222	NRSA63D-331X	M.G.RESISTOR	330	1/16W
R223	NRSA63D-102X	M.G.RESISTOR	1k	1/16W
R226	NRSA63D-103X	M.G.RESISTOR	10k	1/16W
R227	NRSA63D-272X	M.G.RESISTOR	2.7k	1/16W
R228	NRSA63D-223X	M.G.RESISTOR	22k	1/16W
R229	NRSA63D-222X	M.G.RESISTOR	2.2k	1/16W
R231	NRSA63D-221X	M.G.RESISTOR	220	1/16W
R232	NRSA63D-221X	M.G.RESISTOR	220	1/16W
R235	NRSA63D-151X	M.G.RESISTOR	150	1/16W
R238	NRSA63D-151X	M.G.RESISTOR	150	1/16W
R240	NRSA63D-332X	M.G.RESISTOR	3.3k	1/16W
R241	NRSA63D-152X	M.G.RESISTOR	1.5k	1/16W
R244	NRSA63D-121X	M.G.RESISTOR	120	1/16W
R245	NRSA63D-101X	M.G.RESISTOR	100	1/16W
R246	NRSA63D-101X	M.G.RESISTOR	100	1/16W
R247	NRSA63D-121X	M.G.RESISTOR	120	1/16W
R248	NRSA63D-101X	M.G.RESISTOR	100	1/16W
R249	NRSA63D-101X	M.G.RESISTOR	100	1/16W
R250	NRSA63D-121X	M.G.RESISTOR	120	1/16W
R251	NRSA63D-101X	M.G.RESISTOR	100	1/16W
R252	NRSA63D-101X	M.G.RESISTOR	100	1/16W
R254	NRSA63D-103X	M.G.RESISTOR	10k	1/16W
R255	NRSA63D-680X	M.G.RESISTOR	68	1/16W
R256	NRSA63D-680X	M.G.RESISTOR	68	1/16W
R257	NRSA63D-680X	M.G.RESISTOR	68	1/16W
R258	NRSA63D-103X	M.G.RESISTOR	10k	1/16W
R259	NRSA63D-103X	M.G.RESISTOR	10k	1/16W
R260	NRSA63D-103X	M.G.RESISTOR	10k	1/16W
R261	NRSA63D-102X	M.G.RESISTOR	1k	1/16W
R262	NRSA63D-102X	M.G.RESISTOR	1k	1/16W
R263	NRSA63D-102X	M.G.RESISTOR	1k	1/16W
R264	NRSA63D-102X	M.G.RESISTOR	1k	1/16W
R265	NRSA63D-102X	M.G.RESISTOR	1k	1/16W
R266	NRSA63D-102X	M.G.RESISTOR	1k	1/16W
R267	NRSA63D-102X	M.G.RESISTOR	1k	1/16W
R268	NRSA63D-102X	M.G.RESISTOR	1k	1/16W
R270	NRSA63D-102X	M.G.RESISTOR	1k	1/16W
R271	NRSA63D-102X	M.G.RESISTOR	1k	1/16W
R274	NRSA63D-102X	M.G.RESISTOR	1k	1/16W
R275	NRSA63D-102X	M.G.RESISTOR	1k	1/16W
R282	NRSA63J-100X	M.G.RESISTOR	10	1/16W
R301	NRSA63D-223X	M.G.RESISTOR	22k	1/16W
R302	NRSA63D-223X	M.G.RESISTOR	22k	1/16W
R303	NRSA63D-682X	M.G.RESISTOR	6.8k	1/16W
R304	NRSA63D-682X	M.G.RESISTOR	6.8k	1/16W
R305	NRSA63D-150X	M.G.RESISTOR	15	1/16W
R306	NRSA63D-150X	M.G.RESISTOR	15	1/16W
R307	NRSA63D-272X	M.G.RESISTOR	2.7k	1/16W
R308	NRSA63D-272X	M.G.RESISTOR	2.7k	1/16W
R309	NRSA63D-560X	M.G.RESISTOR	56	1/16W
R310	NRSA63D-560X	M.G.RESISTOR	56	1/16W
R311	NRSA63D-560X	M.G.RESISTOR	56	1/16W
R312	NRSA63D-560X	M.G.RESISTOR	56	1/16W
R313	NRSA63D-272X	M.G.RESISTOR	2.7k	1/16W
R314	NRSA63D-272X	M.G.RESISTOR	2.7k	1/16W
R315	NRSA63D-471X	M.G.RESISTOR	470	1/16W
R316	NRSA63D-471X	M.G.RESISTOR	470	1/16W
R317	NRSA63D-390X	M.G.RESISTOR	39	1/16W
R318	NRSA63D-390X	M.G.RESISTOR	39	1/16W
R319	NRSA63D-471X	M.G.RESISTOR	470	1/16W
R320	NRSA63D-471X	M.G.RESISTOR	470	1/16W
R323	NRSA63D-103X	M.G.RESISTOR	10k	1/16W
R324	NRSA63D-103X	M.G.RESISTOR	10k	1/16W
R325	NRSA63J-0R0X	M.G.RESISTOR	0	1/16W
C101	NCB31HK-103X	CER.CAPACITOR	0.01	50V
C102	NCB31EK-223X	CER.CAPACITOR	0.022	25V
C103	NCB31HK-152X	CER.CAPACITOR	1500p	50V
C104	NDC31HJ-3R0X	CER.CAPACITOR	3p	50V

Symbol No.	Part No.	Part Name	Description	
C105	NCB31HK-102X	CER.CAPACITOR	1000p	50V
C106	NCB31HK-102X	CER.CAPACITOR	1000p	50V
C107	NCB31HK-102X	CER.CAPACITOR	1000p	50V
C108	NCB31HK-102X	CER.CAPACITOR	1000p	50V
C109	NCB31HK-102X	CER.CAPACITOR	1000p	50V
C110	NCB10JM-335X	CER.CAPACITOR	3.3	6.3V
C112	NDC31HJ-151X	CER.CAPACITOR	150p	50V
C113	NCB31CK-104X	CER.CAPACITOR	0.1	16V
C114	NBE21EM-105X	TAN.CAPACITOR	1	25V
C116	NCB31HK-103X	CER.CAPACITOR	0.01	50V
C117	NDC31HJ-330X	CER.CAPACITOR	33p	50V
C118	NBE21AM-106X	TAN.CAPACITOR	10	10V
C119	NCB31HK-152X	CER.CAPACITOR	1500p	50V
C120	NBE21AM-106X	TAN.CAPACITOR	10	10V
C121	NCB31HK-152X	CER.CAPACITOR	1500p	50V
C122	NDC31HJ-330X	CER.CAPACITOR	33p	50V
C123	NCB31HK-103X	CER.CAPACITOR	0.01	50V
C124	NBE21EM-105X	TAN.CAPACITOR	1	25V
C125	NCB31CK-104X	CER.CAPACITOR	0.1	16V
C126	NDC31HJ-151X	CER.CAPACITOR	150p	50V
C128	NCB10JM-335X	CER.CAPACITOR	3.3	6.3V
C129	NCB10JM-335X	CER.CAPACITOR	3.3	6.3V
C131	NCB31CK-104X	CER.CAPACITOR	0.1	16V
C132	NCB31HK-122X	CER.CAPACITOR	1200p	50V
C133	NCB31HK-122X	CER.CAPACITOR	1200p	50V
C134	NCB31CK-104X	CER.CAPACITOR	0.1	16V
C135	NDC31HJ-681X	CER.CAPACITOR	680p	50V
C136	NDC31HJ-470X	CER.CAPACITOR	47p	50V
C137	NCB10JM-335X	CER.CAPACITOR	3.3	6.3V
C139	NCB31CK-104X	CER.CAPACITOR	0.1	16V
C140	NCB31CK-104X	CER.CAPACITOR	0.1	16V
C141	NCB10JM-335X	CER.CAPACITOR	3.3	6.3V
C156	NDC31HJ-470X	CER.CAPACITOR	47p	50V
C201	NCB31HK-103X	CER.CAPACITOR	0.01	50V
C202	NCB31EK-223X	CER.CAPACITOR	0.022	25V
C203	NCB31HK-152X	CER.CAPACITOR	1500p	50V
C204	NDC31HJ-3R0X	CER.CAPACITOR	3p	50V
C205	NCB31HK-102X	CER.CAPACITOR	1000p	50V
C206	NCB31HK-102X	CER.CAPACITOR	1000p	50V
C207	NCB31HK-102X	CER.CAPACITOR	1000p	50V
C208	NCB31HK-102X	CER.CAPACITOR	1000p	50V
C209	NCB31HK-102X	CER.CAPACITOR	1000p	50V
C210	NCB10JM-335X	CER.CAPACITOR	3.3	6.3V
C212	NDC31HJ-151X	CER.CAPACITOR	150p	50V
C213	NCB31CK-104X	CER.CAPACITOR	0.1	16V
C214	NBE21EM-105X	TAN.CAPACITOR	1	25V
C216	NCB31HK-103X	CER.CAPACITOR	0.01	50V
C217	NDC31HJ-330X	CER.CAPACITOR	33p	50V
C218	NBE21AM-106X	TAN.CAPACITOR	10	10V
C219	NCB31HK-152X	CER.CAPACITOR	1500p	50V
C220	NBE21AM-106X	TAN.CAPACITOR	10	10V
C221	NCB31HK-152X	CER.CAPACITOR	1500p	50V
C222	NDC31HJ-330X	CER.CAPACITOR	33p	50V
C223	NCB31HK-103X	CER.CAPACITOR	0.01	50V
C224	NBE21EM-105X	TAN.CAPACITOR	1	25V
C225	NCB31CK-104X	CER.CAPACITOR	0.1	16V
C226	NDC31HJ-151X	CER.CAPACITOR	150p	50V
C228	NCB10JM-335X	CER.CAPACITOR	3.3	6.3V
C229	NCB10JM-335X	CER.CAPACITOR	3.3	6.3V
C231	NCB31CK-104X	CER.CAPACITOR	0.1	16V
C232	NCB31HK-122X	CER.CAPACITOR	1200p	50V
C233	NCB31HK-122X	CER.CAPACITOR	1200p	50V
C234	NCB31CK-104X	CER.CAPACITOR	0.1	16V
C235	NDC31HJ-681X	CER.CAPACITOR	680p	50V
C236	NDC31HJ-470X	CER.CAPACITOR	47p	50V
C237	NCB10JM-335X	CER.CAPACITOR	3.3	6.3V
C239	NCB31CK-104X	CER.CAPACITOR	0.1	16V
C240	NCB31CK-104X	CER.CAPACITOR	0.1	16V
C241	NCB10JM-335X	CER.CAPACITOR	3.3	6.3V
C244	NBE41CM-106X	TAN.CAPACITOR	10	16V
C245	NCB31CK-104X	CER.CAPACITOR	0.1	16V
C246	NBE21AM-106X	TAN.CAPACITOR	10	10V
C248	NCB10JM-335X	CER.CAPACITOR	3.3	6.3V

Symbol No.	Part No.	Part Name	Description	
C249	NCB31CK-104X	CER.CAPACITOR	0.1	16V
C250	NCB31CK-104X	CER.CAPACITOR	0.1	16V
C251	NCB31HK-102X	CER.CAPACITOR	1000p	50V
C252	NCB31HK-102X	CER.CAPACITOR	1000p	50V
C253	NDC31HG-101X	CER.CAPACITOR	100p	50V
C254	NDC31HG-101X	CER.CAPACITOR	100p	50V
C255	NDC31HG-101X	CER.CAPACITOR	100p	50V
C256	NDC31HJ-470X	CER.CAPACITOR	47p	50V
C257	NCB31HK-102X	CER.CAPACITOR	1000p	50V
C258	NCB31HK-102X	CER.CAPACITOR	1000p	50V
C301	NDC31HJ-221X	CER.CAPACITOR	220p	50V
C302	NDC31HJ-221X	CER.CAPACITOR	220p	50V
C303	NDC31HJ-121X	CER.CAPACITOR	120p	50V
C304	NDC31HJ-121X	CER.CAPACITOR	120p	50V
C305	NCB31HK-103X	CER.CAPACITOR	0.01	50V
C306	NCB31HK-103X	CER.CAPACITOR	0.01	50V
C307	NDC31HG-100X	CER.CAPACITOR	10p	50V
C308	NDC31HG-100X	CER.CAPACITOR	10p	50V
C309	NDC31HG-100X	CER.CAPACITOR	10p	50V
C310	NDC31HG-100X	CER.CAPACITOR	10p	50V
C311	NDC31HG-100X	CER.CAPACITOR	10p	50V
C312	NDC31HG-100X	CER.CAPACITOR	10p	50V
C316	NCB31HK-103X	CER.CAPACITOR	0.01	50V
L101	NQL124J-220X	COIL	22uH	
L102	NQL124M-1R0X	COIL	1uH	
L103	NQL124J-220X	COIL	22uH	
L104	NQL124M-1R0X	COIL	1uH	
L201	NQL124J-220X	COIL	22uH	
L202	NQL124M-1R0X	COIL	1uH	
L203	NQL124J-220X	COIL	22uH	
L204	NQL124M-1R0X	COIL	1uH	
L301	NQL124M-1R0X	COIL	1uH	
L302	NQL124M-1R0X	COIL	1uH	
L303	NQL124M-1R0X	COIL	1uH	
L304	NQL124M-1R0X	COIL	1uH	
CN24	PGZ02149-002Z	CONNECTOR	2PIN	
CN54	SSV2615-14	CONNECTOR	14PIN	
CN56	SSV2615-28	CONNECTOR	28PIN	
CN57	QGF0503F3-18X	CONNECTOR	18PIN	
TP204	NNZ0009-001X	TEST POINT	TP204,205,209	
K101	PGZ00627Z	FERRATE BEADS	K101-301	
K303	PGZ01823-121AZ	EMI FILTER	K303-306	
TB1	SSV0779	TERMINAL		

6.10 MT BOARD ASSEMBLY PARTS LIST [1][0]

SCK2536-01-00A [1][0]□□□□□□□

Symbol No.	Part No.	Part Name	Description
D1	MA143A-X	DIODE	MATSUSHITA
D2	MA143A-X	DIODE	MATSUSHITA
D3	MA143A-X	DIODE	MATSUSHITA
VR1	QVQ0029-B53	VAL.RESISTOR	5k, TRACKING VR
CN2	QGA1201F2-09X	CONNECTOR	9PIN
CN9	QGA1201F2-08X	CONNECTOR	8PIN
CN11	SCV0502-001	CONNECTOR	1PIN
CN12	QGA1201F2-07X	CONNECTOR	7PIN
CN13	QGA1201F2-14X	CONNECTOR	14PIN
CN14	QGA1201F2-13X	CONNECTOR	13PIN
CN15	QGA1201F2-12X	CONNECTOR	12PIN
CN16	QGA1201F2-15X	CONNECTOR	15PIN
CN18	QGA2501F1-02	CONNECTOR	2PIN
CN19	QGA2501F1-05	CONNECTOR	5PIN
K1	SCV2662-027	FERRITE BEADS	K1-6
TB1	PGZ02228	EARTH LUG	TB1,2

6.11 LCD SUB BOARD ASSEMBLY PARTS LIST [1][1]

SCK2536-02-00A [1][1]□□□□□□□

Symbol No.	Part No.	Part Name	Description
IC1	NJU6433FB2	I.C.(M)	JRC
R1	NRSA63D-334X	M.G.RESISTOR	330k 1/16W
R2	NRSA63D-331X	M.G.RESISTOR	330 1/16W
R3	NRSA63D-331X	M.G.RESISTOR	330 1/16W
R4	NRSA63D-331X	M.G.RESISTOR	330 1/16W
R5	NRSA63D-331X	M.G.RESISTOR	330 1/16W
R6	NRSA63D-331X	M.G.RESISTOR	330 1/16W
R7	NRSA63D-331X	M.G.RESISTOR	330 1/16W
C1	NCB31CK-104X	CER.CAPACITOR	0.1 16V
CN1	QGG2005M1-03	CONNECTOR	3PIN
CN2	QGG2005M1-03	CONNECTOR	3PIN
CN3	QGG2005M1-03	CONNECTOR	3PIN
CN4	QGG2005M1-03	CONNECTOR	3PIN
DA1	QLD0052-001	LCD	
DA2	PGZ02384	BACK LIGHT ASSY	

6.12 I/O JUNC BOARD ASSEMBLY PARTS LIST [1][2]

SCK2574-01-00A [1][2]□□□□□□□

Symbol No.	Part No.	Part Name	Description
D1	SB140L-6395	DIODE	SANYO
D2	RD9.1EW-T1	ZENER DIODE	NEC
R1	NRSA02J-222X	M.G.RESISTOR	2.2k 1/10W
R2	NRSA02J-100X	M.G.RESISTOR	10 1/10W
R3	NRSA02J-0R0X	M.G.RESISTOR	0 1/10W
R4	NRSA02J-0R0X	M.G.RESISTOR	0 1/10W
C1	QETB1EM-478	E.CAPACITOR	4700 25V
LC1	ZJSC-2R2-101-TA	LC FILTER	LC1-8
CN19	QGA2501C2-05Z	CONNECTOR	5PIN
CN22	QGA2501C2-03Z	CONNECTOR	3PIN
CN33	QGA1501C1-04	CONNECTOR	4PIN
CN35	QGA1501C1-05	CONNECTOR	5PIN
CN36	QGA1501C1-06	CONNECTOR	6PIN
CN41	QGA1501C1-09	CONNECTOR	0PIN
CN62	QGA1501C1-05	CONNECTOR	5PIN
CN63	QGA1501C1-05	CONNECTOR	5PIN
CN64	QGA1501C1-06	CONNECTOR	6PIN
CN301	QGA3901C1-04	CONNECTOR	4PIN
CN302	QGA3901C1-02	CONNECTOR	2PIN
CN303	QGA2001C1-02	CONNECTOR	2PIN
CN304	QGA1501C1-02	CONNECTOR	2PIN
TP1	QNZ0352-001Z	TEST POINT	TP1-6
FC1	QNG0037-001Z	FUSE HOLDER	
FC2	QNG0037-001Z	FUSE HOLDER	
K1	SCV2662-027	FERRITE BEADS	K1,2
K4	PGZ00354	FERRATE BEADS	K4,5,7
VA1	QAF0025-220	VARISTOR	

6.13 MIC1 BOARD ASSEMBLY PARTS LIST [1][3]

SCK2526-02-00A [1][3]

Symbol No.	Part No.	Part Name	Description	
IC1	NJM2068M-D-X	I.C.(M)	JRC	
D1	MA143A-X	DIODE	MATSUSHITA	
D2	MA143A-X	DIODE	MATSUSHITA	
R1	NRSA63J-100X	M.G.RESISTOR	10	1/16W
R2	NRSA63D-121X	M.G.RESISTOR	120	1/16W
R3	NRSA63D-472X	M.G.RESISTOR	4.7k	1/16W
R4	NRSA63D-822X	M.G.RESISTOR	8.2k	1/16W
R6	NRSA63D-121X	M.G.RESISTOR	120	1/16W
R7	NRSA63D-472X	M.G.RESISTOR	4.7k	1/16W
R8	NRSA63D-822X	M.G.RESISTOR	8.2k	1/16W
C1	NEH91AM-336X	E.CAPACITOR	33	10V
C2	NCB11AK-225X	CER.CAPACITOR	2.2	10V
C3	NDC31HJ-681X	CER.CAPACITOR	680p	50V
C4	NEH91CM-476X	E.CAPACITOR	47	16V
C5	NCB31HK-222X	CER.CAPACITOR	2200p	50V
C6	NEH91CM-476X	E.CAPACITOR	47	16V
C7	NCB11AK-225X	CER.CAPACITOR	2.2	10V
C8	NDC31HJ-681X	CER.CAPACITOR	680p	50V
C9	NCB31HK-222X	CER.CAPACITOR	2200p	50V
C10	NCB10JM-335X	CER.CAPACITOR	3.3	6.3V
C11	NCB10JM-335X	CER.CAPACITOR	3.3	6.3V
L1	NQL124K-150X	COIL	15uH	
L2	NQL124K-150X	COIL	15uH	
CN12	QGA1201F2-07X	CONNECTOR	7PIN	
CN23	QGA1201F2-06X	CONNECTOR	6PIN	
K1	SCV2662-027	FERRITE BEADS	K1-4	

6.14 OPERATION BOARD ASSEMBLY PARTS LIST [1][4]

SCK2535-02-00A [1][4]

Symbol No.	Part No.	Part Name	Description	
D901	SLM-13VWF-X	L.E.D.		
D902	SLM-13VWF-X	L.E.D.		
D903	SLM-13VWF-X	L.E.D.		
D904	SLM-13VWF-X	L.E.D.		
D905	SLM-13VWF-X	L.E.D.		
R901	NRSA63D-332X	M.G.RESISTOR	3.3k	1/16W
R902	NRSA63D-332X	M.G.RESISTOR	3.3k	1/16W
R903	NRSA63D-472X	M.G.RESISTOR	4.7k	1/16W
R904	NRSA63D-223X	M.G.RESISTOR	22k	1/16W
R905	NRSA63D-222X	M.G.RESISTOR	2.2k	1/16W
S901	NSW0005-001X	TACT SWITCH	STOP	
S902	NSW0005-001X	TACT SWITCH	REW	
S903	NSW0005-001X	TACT SWITCH	FF	
S904	NSW0005-001X	TACT SWITCH	PLAY	
S905	NSW0005-001X	TACT SWITCH	EJECT	
S906	NSW0052-001X	PUSH SWITCH	OPE COVER SW	
CN13	QGF1012F1-08X	CONNECTOR	8PIN	

6.15 MEC I/F BOARD ASSEMBLY PARTS LIST [1][5]

SLK2078-00B [1][5]

Symbol No.	Part No.	Part Name	Description
CN2	QGA1201F2-03X	CONNECTOR	3PIN
CN3	QGA1501F2-02W	CONNECTOR	2PIN
CN4	QGA1501F2-03W	CONNECTOR	3PIN
CN5	QGA1501F2-03W	CONNECTOR	3PIN
CN6	QGA1501F2-04W	CONNECTOR	4PIN
CN7	QGA1201F2-03X	CONNECTOR	3PIN
CN8	QGA1501F2-02W	CONNECTOR	2PIN
CN9	QGA1501F2-05W	CONNECTOR	5PIN
CN10	QGA1201F2-04X	CONNECTOR	4PIN
CN12	QGA1501F2-02W	CONNECTOR	2PIN
CN13	QGF1012F1-08X	CONNECTOR	8PIN
CN14	QGA1201F2-02X	CONNECTOR	2PIN
CN47	SCV2850-040X	CONNECTOR	40PIN

6.16 MDA BOARD ASSEMBLY PARTS LIST [1][6]

SLK2036-00A [1][6]□□□□□□□

Symbol No.	Part No.	Part Name	Description	
Note: When replace the MDA board assembly , copy the marking on CN2 to new one which use setting S201 on the MAIN board (refer to 2.5.2).				
IC1	BA10393F-XE	I.C.(M)	ROHM	
IC2	BA10358F-X	I.C.(M)	ROHM	
IC3	BA6441FP-X	I.C.(M)	ROHM	
Q1	2SC4081/QRS/-X	TRANSISTOR	ROHM	
Q2	2SA1576A/QRS/-X	TRANSISTOR	ROHM	
D2	MA3020-X	ZENER DIODE	MATSUSHITA	
R1	NRSA63J-103X	M.G.RESISTOR	10k	1/16W
R2	NRSA63J-0R0X	M.G.RESISTOR	0	1/16W
R3	NRSA63J-473X	M.G.RESISTOR	47k	1/16W
R4	NRSA63J-103X	M.G.RESISTOR	10k	1/16W
R5	NRSA63J-563X	M.G.RESISTOR	56k	1/16W
R6	NRSA63J-103X	M.G.RESISTOR	10k	1/16W
R7	NRSA63J-474X	M.G.RESISTOR	470k	1/16W
R9	NRSA63J-102X	M.G.RESISTOR	1k	1/16W
R10	NRSA63J-822X	M.G.RESISTOR	8.2k	1/16W
R11	NRSA63J-103X	M.G.RESISTOR	10k	1/16W
R12	NRSA63J-103X	M.G.RESISTOR	10k	1/16W
R13	NRSA63J-222X	M.G.RESISTOR	2.2k	1/16W
R14	NRSA63J-105X	M.G.RESISTOR	1M	1/16W
R15	NRSA63J-563X	M.G.RESISTOR	56k	1/16W
R16	NRSA63J-274X	M.G.RESISTOR	270k	1/16W
R17	NRSA63J-332X	M.G.RESISTOR	3.3k	1/16W
R18	NRSA63J-103X	M.G.RESISTOR	10k	1/16W
R19	NRSA63J-101X	M.G.RESISTOR	100	1/16W
R20	NRSA63J-103X	M.G.RESISTOR	10k	1/16W
R21	NRS144J-R68X	M.G.RESISTOR	0.68	1/4W
R22	NRSA63J-103X	M.G.RESISTOR	10k	1/16W
R23	NRSA63J-102X	M.G.RESISTOR	1k	1/16W
R24	NRSA63J-562X	M.G.RESISTOR	5.6k	1/16W
R25	NRSA63J-103X	M.G.RESISTOR	10k	1/16W
R26	NRSA63J-121X	M.G.RESISTOR	120	1/16W
R27	NRSA63J-121X	M.G.RESISTOR	120	1/16W
R28	NRS144J-R68X	M.G.RESISTOR	0.68	1/4W
C1	NCB31EK-223X	CER.CAPACITOR	0.022	25V
C4	NCF31CZ-104X	CER.CAPACITOR	0.1	16V
C5	NEH71EM-476X	E.CAPACITOR	47	25V
C6	NCB31EK-223X	CER.CAPACITOR	0.022	25V
C7	NCF31CZ-104X	CER.CAPACITOR	0.1	16V
C8	NCF31EZ-473X	CER.CAPACITOR	0.047	25V
C9	NCB31HK-102X	CER.CAPACITOR	1000p	50V
C10	NCS31HJ-471X	CER.CAPACITOR	470p	50V
C11	NCF31CZ-104X	CER.CAPACITOR	0.1	16V
C12	NBE41CM-106X	TAN.CAPACITOR	10	16V
C13	NBE21EM-105X	TAN.CAPACITOR	1	25V
C14	NCB31HK-103X	CER.CAPACITOR	0.01	50V
C15	NCB31HK-103X	CER.CAPACITOR	0.01	50V
C16	NEN21HM-224X	N.P.CAPACITOR	0.22	50V
C17	NEN21HM-224X	N.P.CAPACITOR	0.22	50V
C18	NEN21HM-224X	N.P.CAPACITOR	0.22	50V
C19	NCF31CZ-104X	CER.CAPACITOR	0.1	16V
C20	NCF31CZ-104X	CER.CAPACITOR	0.1	16V
C21	NCF31CZ-104X	CER.CAPACITOR	0.1	16V
L1	NQL124J-470X	COIL	47uH	
CN1	QGF1012F1-10X	CONNECTOR	10PIN	
CN2	QGF1012F1-15X	CONNECTOR	15PIN	
K1	PGZ00627Z	FERRATE BEADS	K1-3	

6.17 A/C BOARD ASSEMBLY PARTS LIST [1][7]

SLK2046-05-00B [1][7]□□□□□□□

Symbol No.	Part No.	Part Name	Description
CN501	QGA1501F1-10	CONNECTOR	10PIN

6.18 M.SENS BOARD ASSEMBLY PARTS LIST [1][8]

SLK2046-01-00B [1][8]□□□□□□□

Symbol No.	Part No.	Part Name	Description
CN401	QGA1501C1-05	CONNECTOR	5PIN

6.19 AL BOARD ASSEMBLY PARTS LIST [1][9]

SLK2046-02-00B [1][9]□□□□□□□

Symbol No.	Part No.	Part Name	Description
PC101	ON1023	I.C(PH COUPLER)	
CN101	QGA1501F1-03	CONNECTOR	3PIN

6.20 T.FG BOARD ASSEMBLY PARTS LIST [2][0]

SLK2046-03-00B [2][0]□□□□□□□

Symbol No.	Part No.	Part Name	Description
PC101	ON1023	I.C(PH COUPLER)	
CN101	QGA1501F1-03	CONNECTOR	3PIN

6.21 S.FG BOARD ASSEMBLY PARTS LIST [2][1]

SLK2046-04-00B [2][1]□□□□□□□

Symbol No.	Part No.	Part Name	Description
PC301	TLP853	I.C(PH COUPLER)	
CN301	QGA1501F1-03	CONNECTOR	3PIN

6.22 B.SENS BOARD ASSEMBLY PARTS LIST [2][2]

SLK2047-01-00A [2][2]□□□□□□□

Symbol No.	Part No.	Part Name	Description
Q101	PN268-NC/P1/	TRANSISTOR	MATSUSHITA
CN101	QGA1501F1-03	CONNECTOR	3PIN

6.23 E.SENS BOARD ASSEMBLY PARTS LIST [2][3]

SLK2047-02-00A [2][3]□□□□□□□

Symbol No.	Part No.	Part Name	Description
Q201	PN268-NC/P1/	TRANSISTOR	MATSUSHITA
CN201	QGA1501F1-03	CONNECTOR	3PIN

6.24 SW1 BOARD ASSEMBLY PARTS LIST [2][4]

SCK2587-02-N0A(U)
SCK2539-02-E0A(E) [2][4]□□□□□□□

Symbol No.	Part No.	Part Name	Description	
IC1	TC74HC165AF-X	I.C.(M)	TOSHIBA	
D1	MA143A-X	DIODE	MATSUSHITA	
D2	MA143A-X	DIODE	MATSUSHITA	
D3	MA143A-X	DIODE	MATSUSHITA	
D4	MA143A-X	DIODE	MATSUSHITA	
D5	MA143A-X	DIODE	MATSUSHITA	
D7	MA143A-X	DIODE	MATSUSHITA	
D8	MA143A-X	DIODE	MATSUSHITA	
D9	MA143A-X	DIODE	MATSUSHITA	
D10	MA143A-X	DIODE	MATSUSHITA	
D11	MA143A-X	DIODE	MATSUSHITA	
D12	MA143A-X	DIODE	MATSUSHITA	
D13	MA143A-X	DIODE	MATSUSHITA	
R1	NRSA63D-223X	M.G.RESISTOR	22k	1/16W
R2	NRSA63D-223X	M.G.RESISTOR	22k	1/16W
R3	NRSA63D-223X	M.G.RESISTOR	22k	1/16W
R4	NRSA63D-223X	M.G.RESISTOR	22k	1/16W
R5	NRSA63D-334X	M.G.RESISTOR	330k	1/16W
R7	NRSA63D-223X	M.G.RESISTOR	22k	1/16W
R8	NRSA63D-223X	M.G.RESISTOR	22k	1/16W
R9	NRSA63D-223X	M.G.RESISTOR	22k	1/16W
R10	NRSA63D-183X	M.G.RESISTOR	18k	1/16W
R11	NRSA63D-103X	M.G.RESISTOR	10k	1/16W
R12	NRSA63D-562X	M.G.RESISTOR	5.6k	1/16W
C1	NCB31CK-473X	CER.CAPACITOR	0.047	16V
S1	QSW0048-001	TOGGLE SWITCH	ZEBRA	
S2	QSW0189-001Z	PUSH SWITCH	VTR TRIG	
S3	QSW0052-004	TOGGLE SWITCH	A.FOCUS/WHITE	
CN7	QGA1201C2-10X	CONNECTOR	10PIN	
CN8	QGA1201C2-12X	CONNECTOR	12PIN	
CN10	QGA1201C2-05X	CONNECTOR	5PIN	
K1	SCV2662-027	FERRITE BEADS	K1-10	
TB1	PGZ02228	EARTH LUG		
VA1	QAF0025-220	VARISTOR		

6.25 SW2 BOARD ASSEMBLY PARTS LIST [2][5]

SCK2525-02-00A [2][5]□□□□□□□

Symbol No.	Part No.	Part Name	Description
S1	QSW0046-001	TOGGLE SWITCH	POWER
CN18	QGA2501F1-02	CONNECTOR	2PIN
CN22	QGA2501F1-03	CONNECTOR	3PIN

6.26 SW3 BOARD ASSEMBLY PARTS LIST [2][6]

SCK2525-03-00A [2][6]□□□□□□□

Symbol No.	Part No.	Part Name	Description
S1	QSW0189-001Z	PUSH SWITCH	VTR TRIG2
CN21	QGA1501F1-02	CONNECTOR	2PIN

6.27 SW4 BOARD ASSEMBLY PARTS LIST [2][7]

SCK2525-04-00A [2][7]□□□□□□□

Symbol No.	Part No.	Part Name	Description	
D1	MA143A-X	DIODE	MATSUSHITA	
D2	MA143A-X	DIODE	MATSUSHITA	
D3	MA143A-X	DIODE	MATSUSHITA	
D4	MA143A-X	DIODE	MATSUSHITA	
D5	MA143A-X	DIODE	MATSUSHITA	
D6	MA143A-X	DIODE	MATSUSHITA	
D7	MA143A-X	DIODE	MATSUSHITA	
R1	NRSA02J-222X	M.G.RESISTOR	2.2k	1/10W
R2	NRSA02J-222X	M.G.RESISTOR	2.2k	1/10W
R3	NRSA02J-222X	M.G.RESISTOR	2.2k	1/10W
R4	NRSA02J-222X	M.G.RESISTOR	2.2k	1/10W
R5	NRSA02J-222X	M.G.RESISTOR	2.2k	1/10W
R6	NRSA02J-222X	M.G.RESISTOR	2.2k	1/10W
R7	NRSA02J-222X	M.G.RESISTOR	2.2k	1/10W
C1	NCF21HZ-104X	CER.CAPACITOR	0.1	50V
S1	QSW0048-001	TOGGLE SWITCH	S1-4	
CN21	QGA1501F1-12	CONNECTOR	12PIN	

6.28 SW5 BOARD ASSEMBLY PARTS LIST 28

SCK2526-03-00A 28□□□□□□

Symbol No.	Part No.	Part Name	Description
S1	NSW0070-002X	SLIDE SWITCH	S1,2/AUDIO 1,2
CN39	QGA1201F2-05X	CONNECTOR	5PIN

6.29 SW6 BOARD ASSEMBLY PARTS LIST 29

SCK2526-04-00A 29□□□□□□

Symbol No.	Part No.	Part Name	Description
S1	QSW0339-001	SLIDE SWITCH	CAM/VTR
CN60	QGA1201F2-02X	CONNECTOR	2PIN

6.30 TC.IN BOARD ASSEMBLY PARTS LIST 30

SCK2525-09-00A 30□□□□□□

Symbol No.	Part No.	Part Name	Description
CN37	QGA1501C1-02	CONNECTOR	2PIN
K1	SCV2662-027	FERRITE BEADS	K1,2

6.31 TC.OUT BOARD ASSEMBLY PARTS LIST 31

SCK2525-10-00A 31□□□□□□

Symbol No.	Part No.	Part Name	Description
CN34	QGA1501C1-04	CONNECTOR	4PIN
K1	SCV2662-027	FERRITE BEADS	K1,2

6.32 EAR BOARD ASSEMBLY PARTS LIST 32

SCK2525-05-00A 32□□□□□□

Symbol No.	Part No.	Part Name	Description
C1	NDC21HJ-181X	CER.CAPACITOR	180p 50V
C2	NDC21HJ-181X	CER.CAPACITOR	180p 50V
J15	QNS0095-001	3.5 JACK	EAR PHONE
CN27	QGA1501F1-04	CONNECTOR	4PIN

6.33 LI.BATT BOARD ASSEMBLY PARTS LIST 33

SCK2535-03-00A 33□□□□□□

Symbol No.	Part No.	Part Name	Description
CN38	QGA1501F2-02W	CONNECTOR	2PIN
CN801	YQ44288-1-1	CONNECTOR	1PIN
CN802	YQ44289-1-1	CONNECTOR	1PIN

6.34 GEN.IN BOARD ASSEMBLY PARTS LIST [3][5]

SCK2525-08-00A [3][5]□□□□□□□

Symbol No.	Part No.	Part Name	Description
R1	NRSA02J-750X	M.G.RESISTOR	75 1/10W
R2	NRSA02J-0R0X	M.G.RESISTOR	0 1/10W
CN58	QGA1501C1-03	CONNECTOR	3PIN
K1	SCV2662-027	FERRITE BEADS	

6.35 MON.OUT BOARD ASSEMBLY PARTS LIST [3][6]

SCK2525-11-00A [3][6]□□□□□□□

Symbol No.	Part No.	Part Name	Description
CN59	QGA1501C1-02	CONNECTOR	2PIN
K1	NRSA02J-0R0X	M.G.RESISTOR	0 1/10W
K2	NRSA02J-0R0X	M.G.RESISTOR	0 1/10W

6.36 RM BOARD ASSEMBLY PARTS LIST [3][7]

SCK2525-06-00A [3][7]□□□□□□□

Symbol No.	Part No.	Part Name	Description
C1	NDC21HJ-820X	CER.CAPACITOR	82p 50V
J16	QNS0095-001	3.5 JACK	REMOTE
CN40	QGA1501F1-03	CONNECTOR	3PIN

6.37 CN BOARD ASSEMBLY PARTS LIST [3][8]

SCK2542-02-00A [3][8]□□□□□□□

Symbol No.	Part No.	Part Name	Description
CN26	QGA1201C2-06X	CONNECTOR	6PIN

6.38 MEMORY BOARD ASSEMBLY PARTS LIST [4][0]

SCK2542-01-00A [4][0]□□□□□□□

Symbol No.	Part No.	Part Name	Description
IC1	NM93C86AEM8-X	I.C.(M)	NATIONAL SEMICO
D1	MA143A-X	DIODE	MATSUSHITA
D2	MA143A-X	DIODE	MATSUSHITA
D3	MA143A-X	DIODE	MATSUSHITA
D4	MA143A-X	DIODE	MATSUSHITA
D5	HZM6C-X	ZENER DIODE	HITACHI
R1	NRSA63D-101X	M.G.RESISTOR	100 1/16W
R2	NRSA63D-223X	M.G.RESISTOR	22k 1/16W
C1	NCB31CK-104X	CER.CAPACITOR	0.1 16V
J13	QNZ0259-001	PLUG(6P)	6PIN

6.39 MIC2 BOARD ASSEMBLY PARTS LIST [4][1]

SCK2570-01-00A [4][1]□□□□□□□

Symbol No.	Part No.	Part Name	Description
LC1	ZJSC-2R2-101	LC FILTER	LC1,2
CN28	PGZ02149-103Z	CONNECTOR	3PIN
CN61	PGZ02149-104Z	CONNECTOR	4PIN
K1	PGZ00354	FERRATE BEADS	K1,2

SECTION 7
PACKING

7.1 PACKING ASSEMBLY [M][7] for DY-90U/E

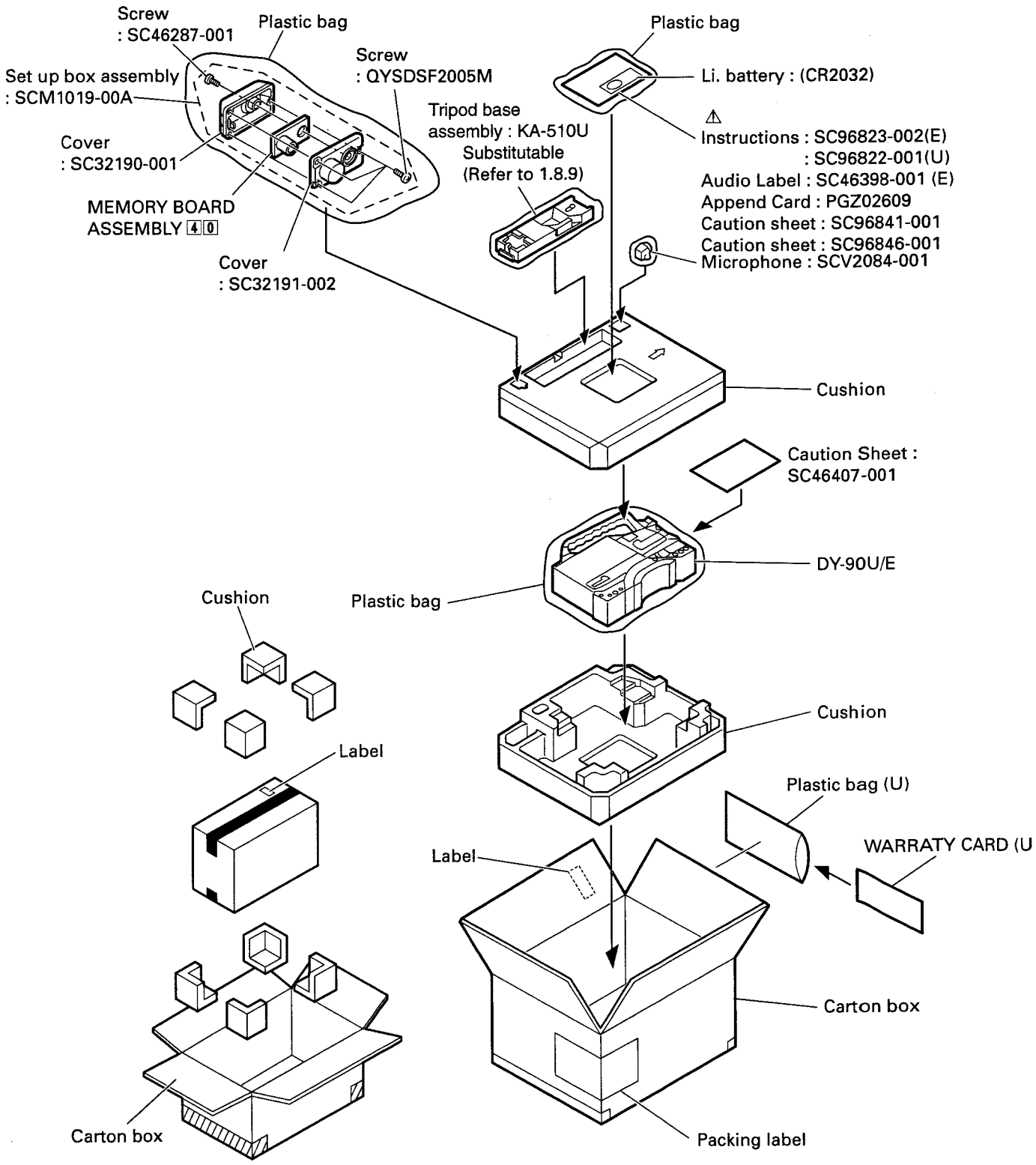

7.2 PACKING ASSEMBLY [M][7] for DY-90EC/EC (K)

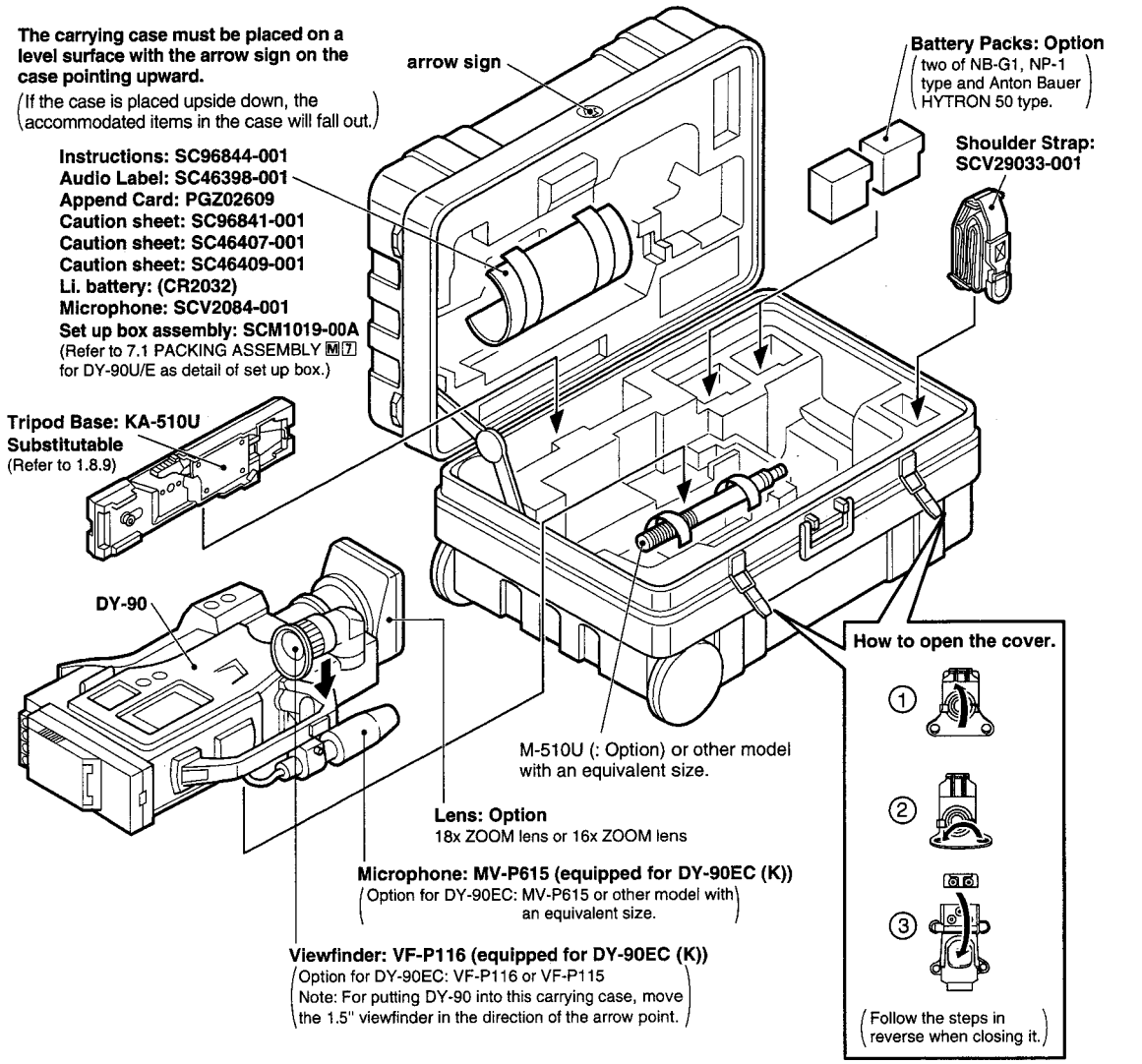

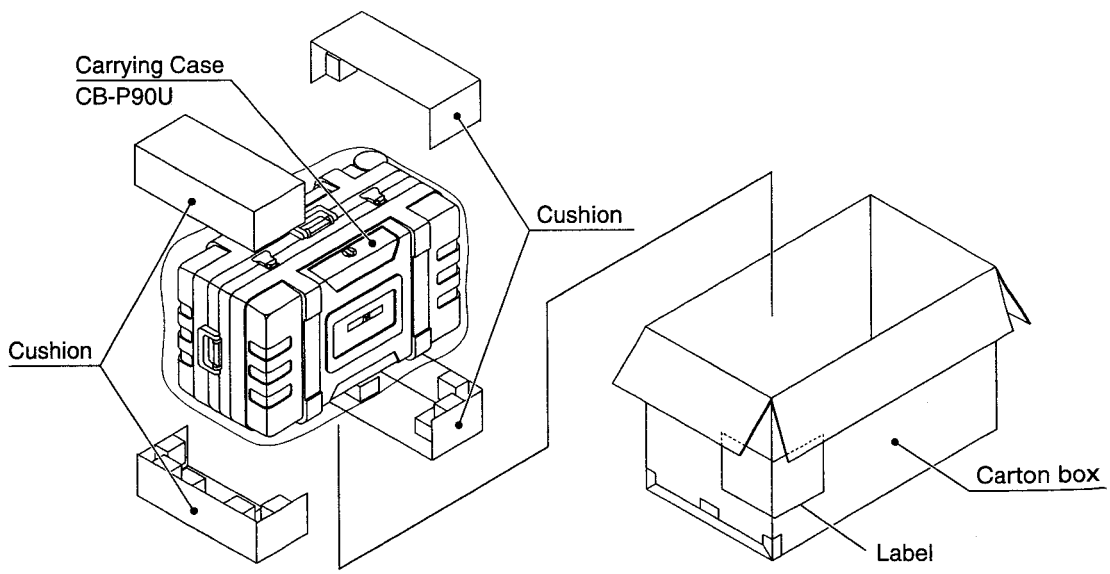

7.3 SW & VR SETTING

7.3.1 SW & VR setting for DY-90E/EC/EC (K)

[ ] : Setting

Switch and VR Name	Setting at shipment		
OP FILTER	[1.3200K]	2.5600K + 1/4ND	
	3.5600K	4.5600K + 1/16ND	
POWER	ON	[OFF]	
VTR	[STBY]	SAVE	
GAIN	[L]	M	H
OUTPUT (A. KNEE)	[CAM/ON]	CAM/OFF	BAR/ON
WHT. BAL	[B]	A	PRST
AUTO IRIS	BACK L	[NORMAL]	STOP L
BLACK	STRETCH	[NORMAL]	COMPRESS
SHUTTER	ON	V. SCAN	[OFF]
FILE	A	B	[OFF]
ZEBRA	[ON]	OFF	
AUD1 INPUT SELECT	[LINE]	MIC	MIC +48V ON
AUD2 INPUT SELECT	[LINE]	MIC	MIC +48V ON
MONITOR OUT SELECT	[VTR]	CAM	
AUDIO DISPLAY	[DA1/DA2]	DA3/DA4	
LIGHT	[ON]	OFF	
COUNTER	CTL	[TC]	UB
MIC SELECT (2/1L)	[AUTO]	MANUAL	
MIC SELECT (1R)	[AUTO]	MANUAL	
MIC SELECT	[MIC 1]	MIC 2	
AUDIO SELECT (AUD. 1)	[AUTO]	MANUAL	
AUDIO SELECT (AUD. 2)	[AUTO]	MANUAL	
TC GENERATOR	[PRESET]	REGEN	
TC GENERATOR	[REC]	FREE	
TC DISP	[TC]	SUB TC	
MONITOR LEVEL	Center		
ALARM LEVEL			
MIC. REC. LEVEL 1/L			
MIC. REC. LEVEL 2/R			
AUDIO LEVEL DA1			
AUDIO LEVEL DA1			
H. PHASE	Setting by adjustment		
SC FINE			
SC COARSE			

7.3.2 SW & VR setting for DY-90U

[ ] : Setting

Switch and VR Name	Setting at shipment		
OP FILTER	[1.3200K]	2.5600K	
	3.5600K + 1/16 ND	EFFECT (CROSS)	
POWER	ON	[OFF]	
VTR	[STBY]	SAVE	
GAIN	[L]	M	H
OUTPUT (A. KNEE)	[CAM/ON]	CAM/OFF	BAR/ON
WHT. BAL	[B]	A	PRST
AUTO IRIS	BACK L	[NORMAL]	STOP L
BLACK	STRETCH	[NORMAL]	COMPRESS
SHUTTER	ON	V. SCAN	[OFF]
FILE	A	B	[OFF]
ZEBRA	[ON]	OFF	
DA1 INPUT SELECT	[LINE]	MIC	MIC +48V ON
DA2 INPUT SELECT	[LINE]	MIC	MIC +48V ON
MONITOR OUT SELECT	[VTR]	CAM	
AUDIO DISPLAY	[DA1/DA2]	DA3/DA4	
LIGHT	[ON]	OFF	
COUNTER	CTL	[TC]	UB
DA1 AUDIO MODE SELECT	[AUTO]	MANUAL	
DA2 AUDIO MODE SELECT	[AUTO]	MANUAL	
DA3 AUDIO MODE SELECT	[AUTO]	MANUAL	
DA4 AUDIO MODE SELECT	[AUTO]	MANUAL	
TC GENERATOR	[PRESET]	REGEN	
TC GENERATOR	[REC]	FREE	
TC DISP	[TC]	SUB TC	
MONITOR LEVEL	Center		
ALARM LEVEL			
DA1 AUDIO LEVEL			
DA2 AUDIO LEVEL			
DA3 AUDIO LEVEL			
DA4 AUDIO LEVEL			
H. PHASE	Setting by adjustment		
SC FINE			
SC COARSE			

SECTION 8
TECHNICAL INFORMATION

8.1 COMPARISON WITH PREVIOUS MODEL

8.1.1 Camera Section

Specifications	KY-D29	DY-90 Camera Section
Image pickup device	2/3", 3-IT CCD	2/3", 3-IT CCD
Effective pixels	768H x 493V	768H x 493V
Sensitivity	F11, 2000 lux	F11, 2000 lux
Color temperature conversion filters	3200K, 5600K, 5600K + 1/16 ND, effect (cross) filter	[U version]: 3200K, 5600K, 5600K + 1/16 ND, effect (cross) filter [E version]: 3200K, 5600K, 5600K + 1/4 ND, 5600K + 1/16 ND
Minimum object illumination	0.35 lux (with Super Lolux)	0.75 lux (with Super Lolux)
S/N	65 dB (DNR ON)	—
Horizontal resolution	850 TV lines	—
Contour correction	H: Bothways V: Bothways	H: Bothways V: Bothways
Color bar signal	SMPTE color bars	SMPTE color bars
White balance	Preset/AW1/AW2/(FAW)	Preset/A/B/(FAW)
Electronic shutter	1/60, 1/100, 1/250. 1/1000, 1/2000, V.SCAN	1/60, 1/100, 1/250, 1/1000, 1/2000, V.SCAN
Gain boost	-3/0/6/9/12/18 dB, ALC	-3/0/6/9/12/18 dB, ALC
Functions	**KY-D29**	**DY-90 Camera Section**
Full-auto shooting (FAS)	Provided	Provided
Variable scanning (V.SCAN) Lolux	60.5 Hz to 249.7 Hz Lolux: +33 dB gain boost Super Lolux: +39 dB gain boost	60.5 Hz to 249.7 Hz Lolux: +33 dB gain boost
High-resolution function	Normal: 380 TV lines (V resolution) V. Plus: 420 TV lines V. Max: 450 TV lines	Normal: 380 TV lines (V resolution) V. Plus: 420 TV lines V. Max: 450 TV lines
Accu-focusing function	Built in	Built in
Smooth transition function	Built in	Built in
Black stretching function	Built in	Built in
Black compression function	Built in	Built in
Auto knee function	ON/OFF switchable (menu driven)	ON/OFF switchable (switch provided)
DNR (Digital Noise Reduction)	Built in	—
White flaw correction	Built in	Built in
Detail H/V balance setting (DTL. H/V BAL.)	Built in	Built in
Detail enhancement frequency setting (DTL. FREQUENCY)	LOW, MIDDLE, HIGH, AUTO	LOW, MIDDLE, HIGH

Table 8-1-1 Comparison with Previous Model

8.1.2 VCR Section

Specifications/Functions	BR-D40	DY-90 VCR Section
Format	Digital-S	Digital-S
Tape width	12.65 mm	12.65 mm
Tape speed	57.737 mm/sec. (NTSC) 57.795 mm/sec. (PAL)	57.737 mm/sec. (NTSC) 57.795 mm/sec. (PAL)
Recording/play time	104 minutes (with a DS-104 cassette)	104 minutes (with a DS-104 cassette)
Power consumption	22W (BR-D40 in recorded mode)	30W (in recorded mode with camera)
Video		
Frequency response	Y: 5 MHz, R-Y/B-Y: 2 Mhz	Y: 5 MHz, R-Y/B-Y: 2 Mhz
S/N	52 dB (during BR-D80/D50 reproduction with component output)	52 dB (during BR-D80/D50 reproduction with component output)
Resolution	410 lines	410 lines
Audio		
Number of channels	PCM x 2, cue track x 2	PCM x 4, cue track x 2
Mic-1 input	None	–52 dBs, unbalanced, 6-pin
Mic-2 input	–60 dBs, balanced, XLR 3-pin	–60 dBs, balanced, XLR 3-pin
Line input	+4 dB, 10 kΩ, balanced –60 dB, 3 kΩ, balanced	+4 dB, 10 kΩ, balanced –60 dB, 3 kΩ, balanced
Output	–6 dBs, low impedance, unbalanced (RCA)	0 dBs, low impedance, balanced (XLR5)
Sampling frequency	48 kHz	48 kHz
Quantization	16-bit	16-bit
Frequency response	20 Hz to 20 kHz (PCM)	20 Hz to 20 kHz (PCM)
Dynamic range	85 dB (PCM) (during BR-D80/D50 reproduction)	80 dB (PCM) (during BR-D80/D50 reproduction)
Wow & flutter	below measurable limit	below measurable limit

Table 8-1-2 Comparison with Previous Model

8.1.3 Circuit Layout

A comparison of circuit layouts is shown in Figures 8-1-1 (a) and (b).
In the case of a combination of KY-D29 and BR-D40, the transmission of the video signal has been carried out as its analog component. The signal from the camera section's CCD is converted to a digital signal. The signal digitally processed at the camera section is then returned to an analog signal by the D/A converter and sent to the VCR circuit. The signal is again digitalized by means of the A/D converter in the BR-D40. In the DY-90, however, the digital component signal is transmitted and received unchanged in order to avoid picture degradation. This allows a reduction of the number of A/D and D/A converters as well as the sharing of encoders between the different circuit sections, leading to energy saving and a lighter weight of the unit.

■ **Circuit layout of KY-D29 + BR-D40**

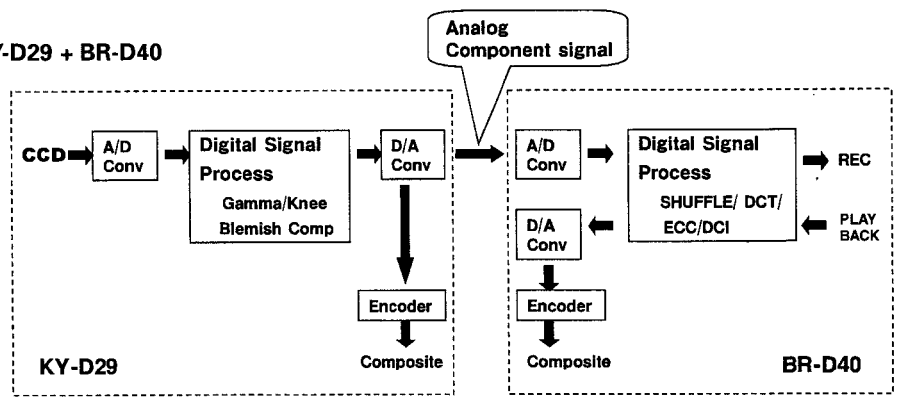

Fig. 8-1-1 (a)

■ **Circuit layout of DY-90**

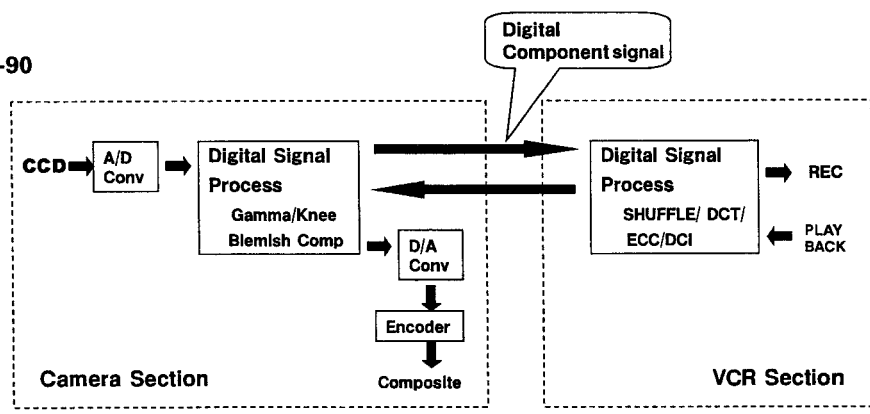

Fig. 8-1-1 (b)

8.2 DESCRIPTION OF NEW CIRCUITRY (CAMERA SECTION)

8.2.1 Video Processor Circuit in the Camera Section

The video processor circuit of this unit features a more simplified design than in previous cameras. When the circuit is seen from the viewpoint of signal flow in the camera circuitry, it roughly consists of three types of PC board. (Fig. 8-2-1)

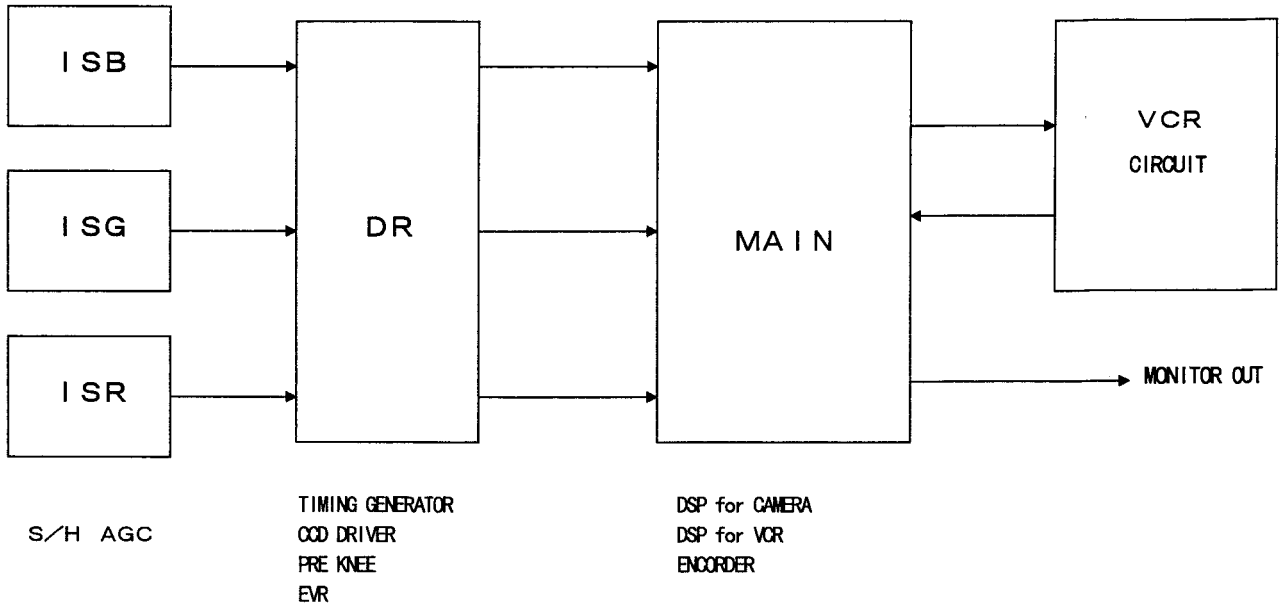

Fig. 8-2-1

The processor circuitry in the previous camera head was composed of the three circuit boards for TG (Timing Generator), DR (Driver) and PA (Pre-Amplifier), but this new unit combines the circuitry in a single DR board. This has made it possible to reduce the number of circuit boards and the component count with a consequent reduction of the CCD temperature rise thanks to the elimination of the circuit boards from the vicinity of the CCD.

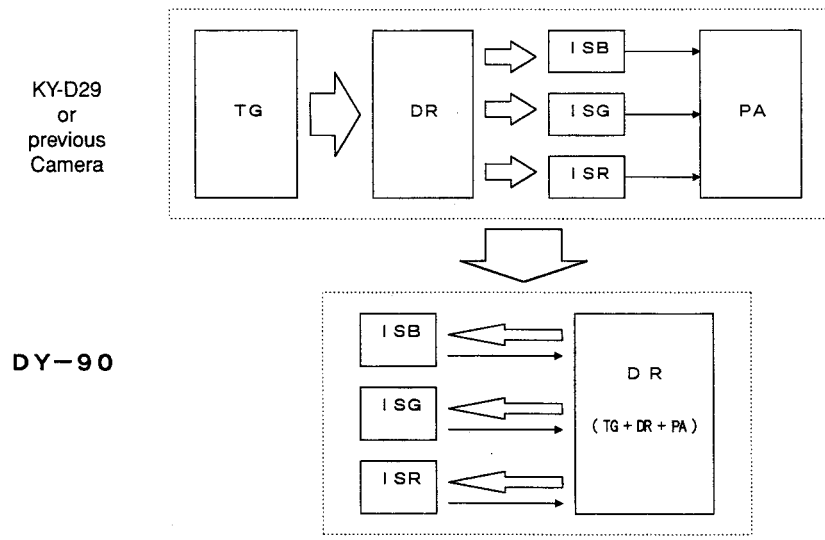

Fig. 8-2-2

(1) IS board

The circuitry in the IS board optimizes the clamping and sampling time constant by using a sample & hold circuit, which is an improvement on the previous CDS (Correlated Double Sampling) circuit, and improves the S/N by including the gain boost circuit which has previously been located in the PA board. While the KY-D29 performed the feedback black clamping inside the IS board, this unit detects the black level at the DR board and feeds back the control signal to the IS board.

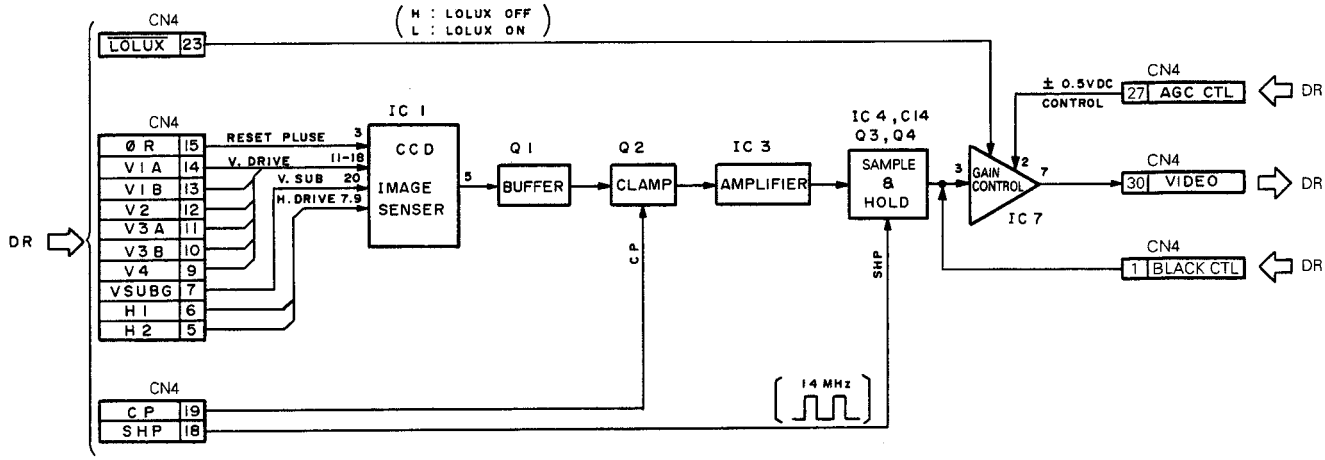

Fig. 8-2-3

(2) DR board

The DR board is implemented by unifying the functions which have previously been divided into three. The circuit design for each function is based on that used with the previous model KY-D29, but the new circuit is composed of simplified video circuitry and EVR-related circuitry.

The video-related signal processing circuitry includes the pre-knee circuit which is indispensable for expressing a dynamic range of 600%, the detector circuit for the feedback black clamping (mentioned above) and the signal processor circuit related to the basic video performance parameters such as flare, M.BLACK and B.PAINT.

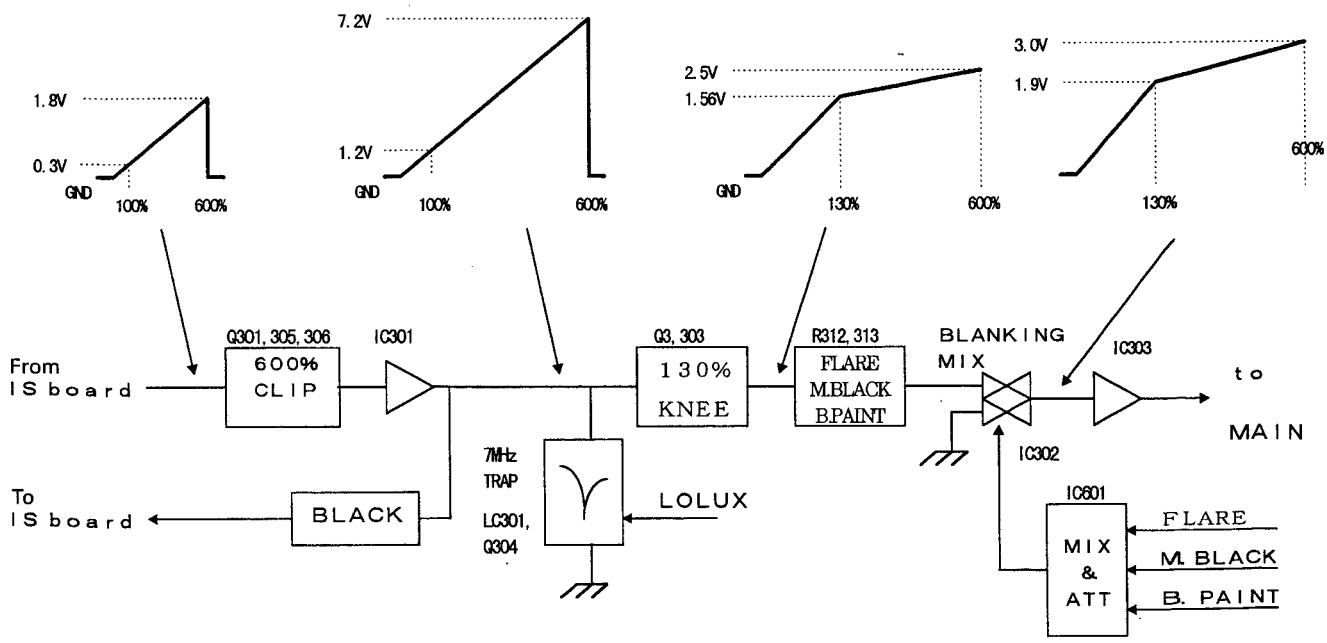

Fig. 8-2-4

(3) MAIN board (Camera-related signal processing)

In the MAIN board, the digital signal processing of the camera and that of the VCR are implemented in a single circuit board to minimize the transfer distance of digital signals, achieving an ideal digital-to-digital interfacing.

Among the range of wire functions of the MAIN board, the following description will focus on the processing of digital signals related to the camera. Among the 10 circuit diagrams of the MAIN board in this manual, those covering the camera-related functions are shown in pages 1, 2 and 3.

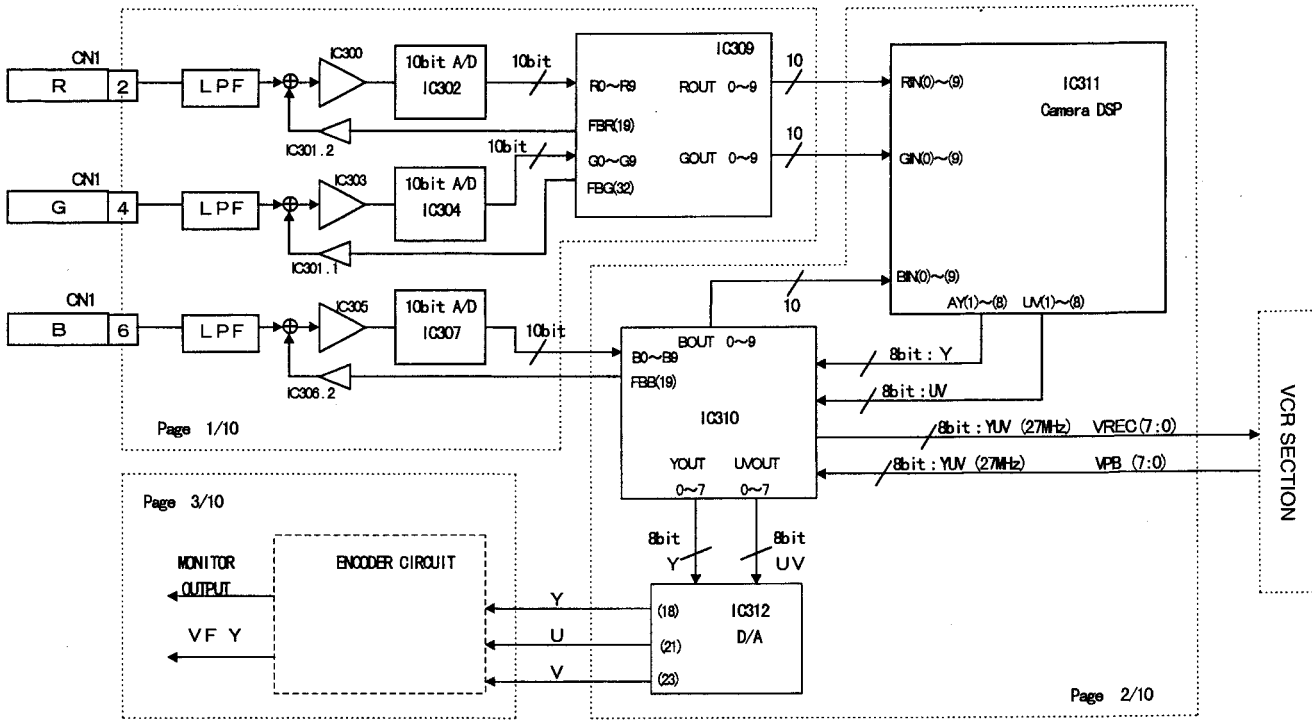

Fig. 8-2-5

The input R/G/B analog signals pass through the LPFs, then their black levels are clamped and converted into digital signals by 10-bit A/D converters. The digitally-converted signals of the R/G CH are sent to IC309 and the digitally converted signal of the B CH is sent to IC310. These ICs perform the feedback lamp signal detection and the shading correction operations inside them.

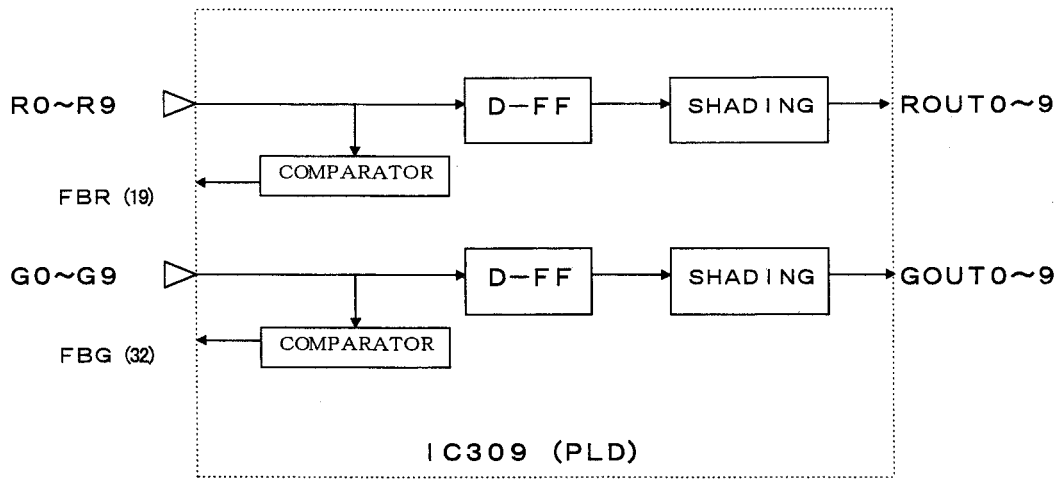

Fig. 8-2-6

The R/G/B digital signals output from the IC309 and IC310 are input into the main DSP (IC311) of the camera block. This camera DSP has the specifications and executes internal processing operations as listed below.

[Specifications]

- ◆ CMOS gate array: 0.35 µm rule, 330k gate
- ◆ 176-pin plastic QFP
- ◆ 3.3 V-drive: Power consumption below 300 mA
- ◆ Input signals: R/G/B, 10 bits each. Output signals: Y/UV, 9 bits each.
- ◆ Internal operations: Compatible with up to 14-bit width

[Functions]

- ◆ White flaw detection and correction
- ◆ DETAIL circuit
- ◆ Color matrix circuit
- ◆ Gamma correction
- ◆ Y/UV matrix processing
- ◆ Black stretch/compression circuit
- ◆ Knee (Auto knee)/white clipping
- ◆ Peak, APL and NAM detection circuits
- ◆ Color bar generator circuit

* These internal processing functions are basically identical to those which were digitalized with the KY-D29, but this gate array has been newly designed based on expertise obtained through the previous design.

* The color matrix allows the user to reproduce the desired color tones by fine-adjusting nine parameters. (As the default values of the color matrix have been set based on a detailed examination and evaluation of color reproduction at the time of development, we believe that they usually do not need modification. If the color matrix is to be re-adjusted based on a user request, etc., the use of a color chart and vector scope is required. See section 1.8.10 for the adjustment procedure.)

The use of the newly developed DSP has achieved a reduction in the size and power consumption of the circuit board.
The internal processing block diagram of the DSP is shown below.

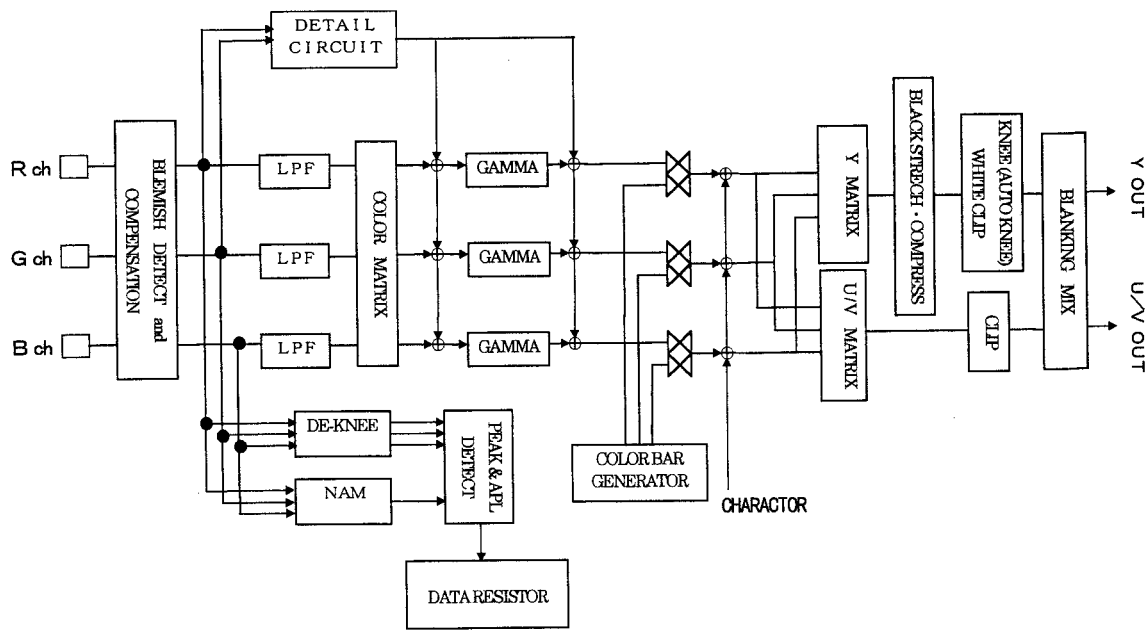

Fig. 8-2-7

The output signal format of the camera DSP is based on the Y (13.5 MHz) and UV mixed (13.5 MHz) signals.
The signal sequence is shown below.

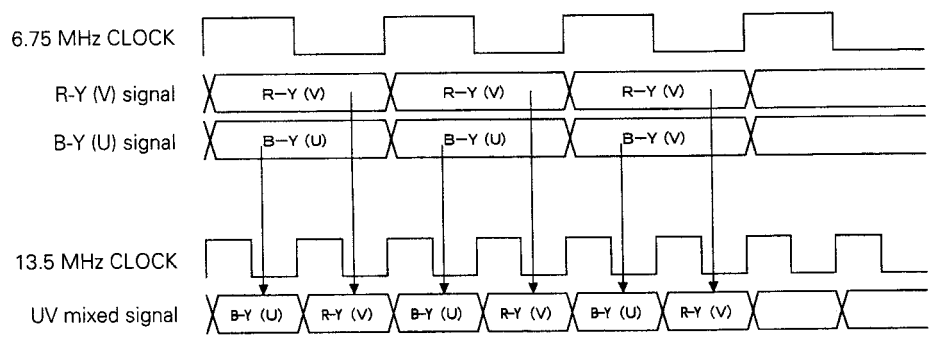

Fig. 8-2-8

Inside the IC310, the Y and UV signals are mixed to a YUV mixed (27 MHz) signal which interfaces with the Digital S VCR.

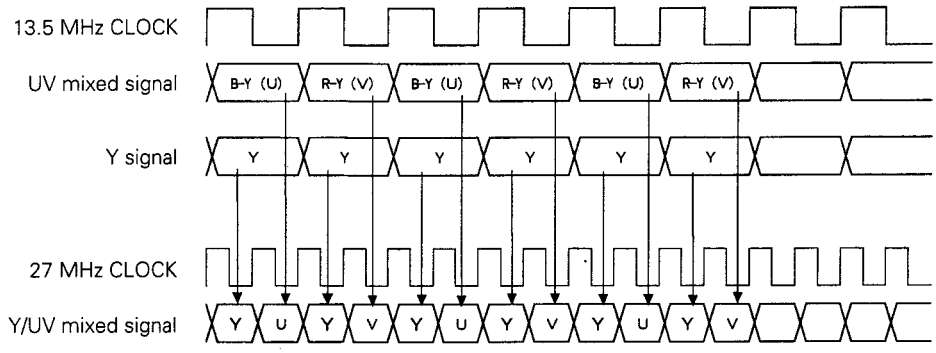

Fig. 8-2-9

The IC310 also includes a function for switching between the DSP input signals and the play (EE) signals and a circuit for synthesizing/decomposing the YUV mixed signals.

The IC309 and IC310 constituting the MAIN board use PLDs (Programmable Logic Devices) manufactured by ALTERA. The internal program of the IC is downloaded from the IC3 (ROM) of the CP board every time the power is turned on.

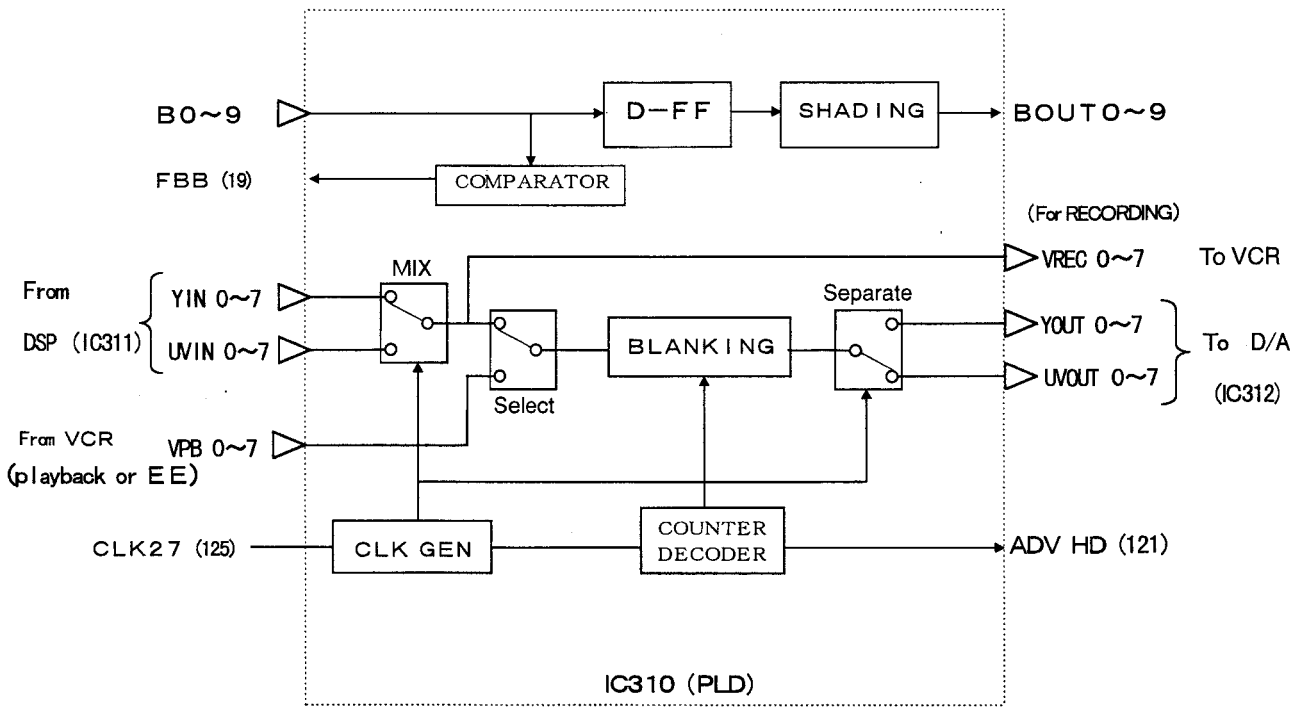

Fig. 8-2-10

8.2.2 Signal Processing in DSPIC (MAIN board IC311)

See Fig. 8.2.7 for the entire block diagram of DSPIC.

(1) "Detail" Signal Processing

The signal processing for this unit which takes place at the "Detail" signal generating and composing block of the camera DSP is different from the conventional signal processing. Details of the procedure will be given below.

The "Detail" signal generation and composing block in the DSP illustrated below.

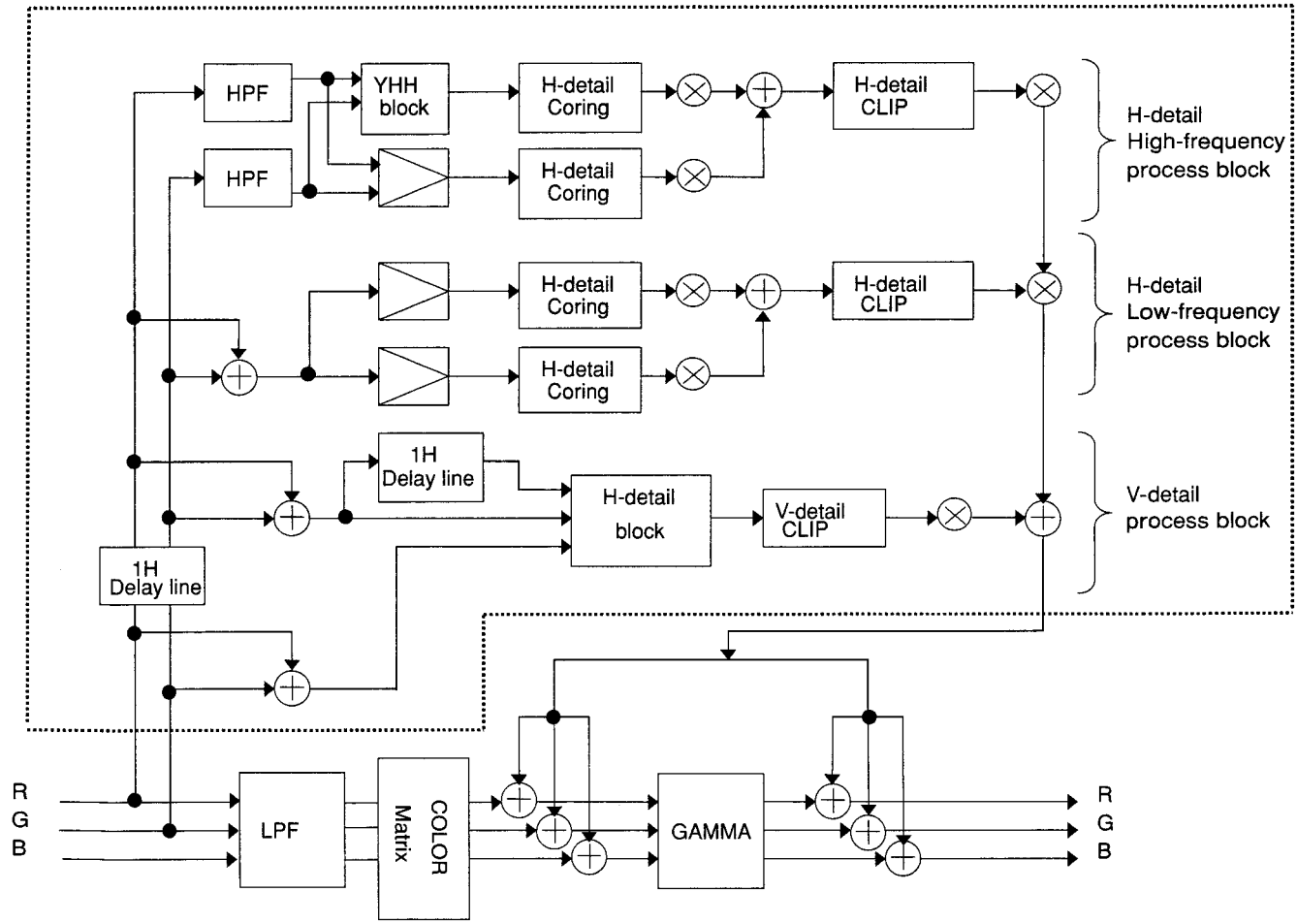

Fig. 8-2-11

H/V "detail" signals are generated from the Rch and Gch signals before passing through the color matrix circuit. The H-detail signal is separated between the high-frequency range and low-frequency range using the HPF to enable choosing a frequency range where the signal intensity is controlled and boosted. In the H-detail signal processing block, the frequency range is further separated into 4 sections where boosting intensity can be controlled. The mid frequencies of those frequency ranges are given below.

(When driven by a 13.5 MHz clock)

H – detail High Frequency	: H	10.125MHz
H – detail High Frequency	: L	6.75MHz
H – detail Low Frequency	: H	3.75MHz
H – detail Low Frequency	: L	1.875MHz

The generated "Detail" signals are added together. Half of the resulting sum is mixed with the line signals (R/G/B) prior to gamma correction processing and the other half with the line signals after gamma correction. This way, only half of the mixed "detail" signals is subjected to gamma correction processing, ensuring more natural-fit frequency characteristics than before. However, you may feel that the "Detail" signal is somehow too weak in dark area. This is because in the previous system the "Detail" signals in a dark area have been excessively intensified because the "Detail" signal components are amplified by letting them pass through the gamma correction circuit togther. In the present design, each half of the "Detail" signal components is added to line signals before and after the gamma correction circuit, so that they are less subjected to amplification with the gamma correction circuit.

(2) Color Matrix Circuit

The DSP of this unit includes a color matrix circuit for a finely defined color reproduction. Color reproduction characteristics can be altered and adjusted by controlling the color signal components separated as illustrated below in terms of the nine parameters.

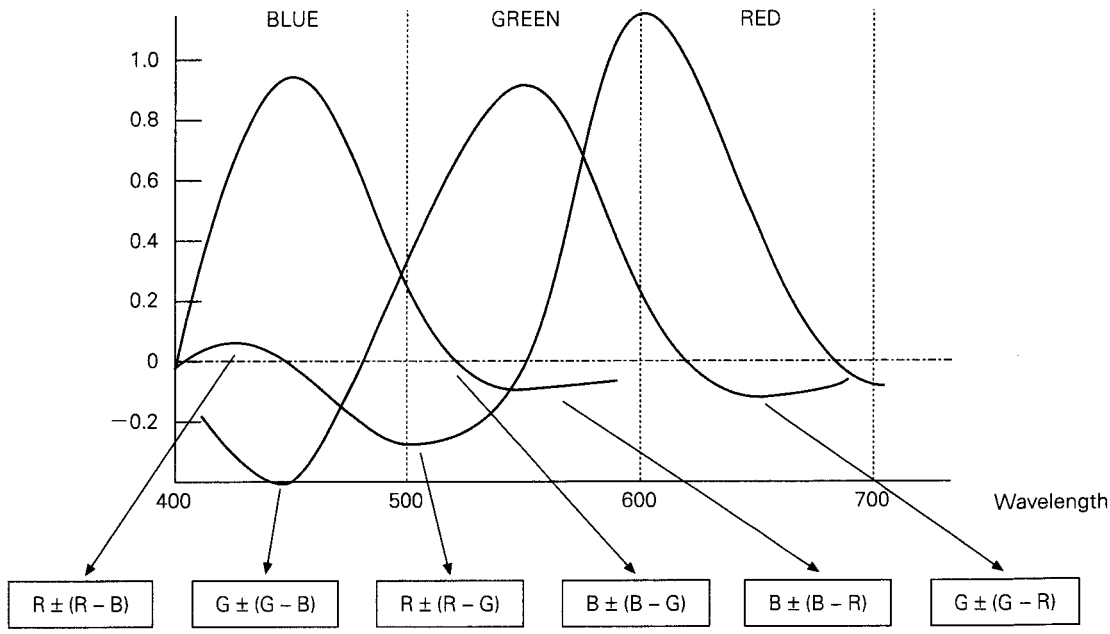

Fig. 8-2-12

* See Section 1.15 for details of the color matrix adjustment.

(3) Data Detection Required for Auto Control Systems

In conventional cameras, the data required for controlling the auto control systems such as Auto White and Auto Balance have been generated and detected using the analog signal processing circuit in the CP board and then loaded into the CPU. Now in this unit, the DSP IC incorporates these facilities in itself and able to store the result of data calculation.
The CPU then loads the data in it as required.
This unit is also equipped with the DE-KNEE circuit which extends the signal compressed by the PRE-KNEE before calculating the PEAK/APL data of R/G/B.
It thus ensures a more accurate calculation of auto iris values for a very bright subject.

8.3 VIDEO SYSTEM

8.3.1 Video Circuit

(1) Signal flow

Fig. 8-3-1 shows the flow of signals in the video circuitry.

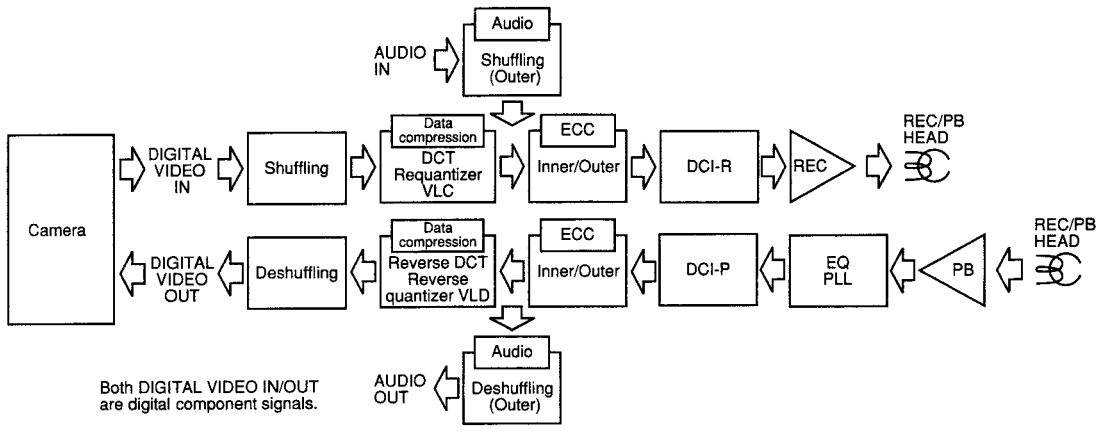

Fig. 8-3-1 (a) Video Signal Processing Flow

(2) Operation of each block

1) Input signals

The digital component video signals from the camera are input directly into the shuffling IC. While the BR-D40 incorporates A/D and D/A converters in this block to convert signals between analog and digital, the DY-90 transmits the signal in its original digital form in order to allow recording and playback without altering the video quality. Refer fig.8-3-1(b).

The input signal is based on the Digital-S format. It consists of digital component (4:2:2) signals with which Y = 13.5 MHz, B-Y/R-Y = 6.75 MHz and quantization bits of 8 bits. However, the Y, B-Y and R-Y signals are multiplexed into a single signal, which is transmitted at twice the frequency of the Y signal, i.e. at 27 MHz. The number of effective pixels and lines per frame are identical to the previous design.

The data rate per second is as follows.

NTSC: 720 (H) x 480 (V) x 2 (Y&C) x 8 (bits) x 30 (frames)
≒166 Mbps.

PAL : 720 (H) x 576 (V) x 2 (Y&C) x 8 (bits) x 25 (frames)
≒166 Mbps.

Input signal: Mixture of Y/C, transmitted at high 27 MHz rate.

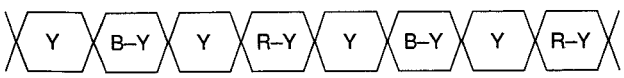

8 bit / 27 MHz

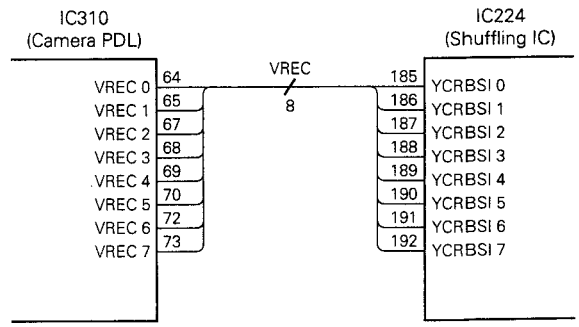

Fig. 8-3-1(b) Signal interface

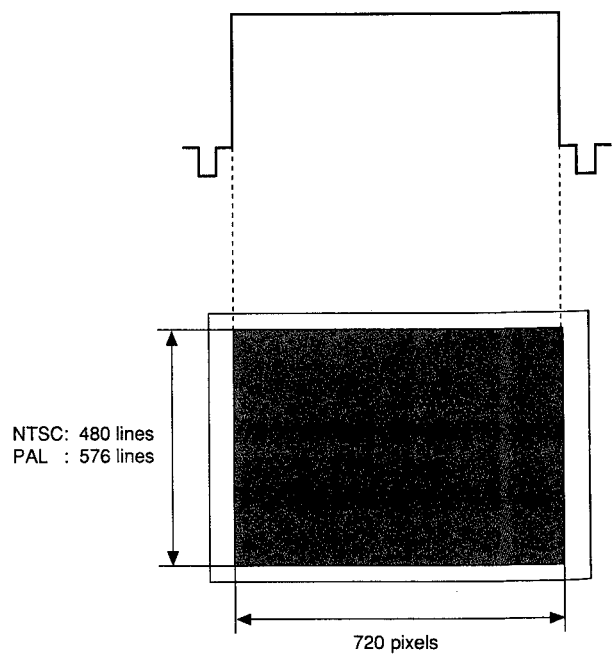

Fig. 8-3-1(c) Input signal from camera

2) Shuffling

The purpose of shuffling is to distribute data contained in five macroblocks equally among them that are used as a unit of fixed length data as well as to make data distortion caused by compression inconspicuous. Concretely, five macroblocks that are unitized as mentioned below are collected from various points of a picture according to a prescribed rule for shuffling.

a) DCT block

Prior to shuffling, data for one frame is splitted into 8x8 pixel blocks (called DCT blocks), each of which is a basic unit of DCT. Since there is a difference in sampling frequency between Y signal and color difference signal, Y signal is splitted into 60(V) x 90(H) blocks while color difference signal is splitted into 60(H) x 45(H) blocks for NTSC and Y signal is splitted into 72(V) x 90(H) blocks while color difference signal is splitted into 72(V) x 45(H) blocks.

b) Macroblock

One macroblock is composed of four DCT blocks in the same position of a picture. Detail of four DCT blocks is two DCT blocks of Y signal and two DCT blocks of each color difference signal (Pb or Pr). Concealment of ECC is carried out at a unit of macroblock.

Construction of picture

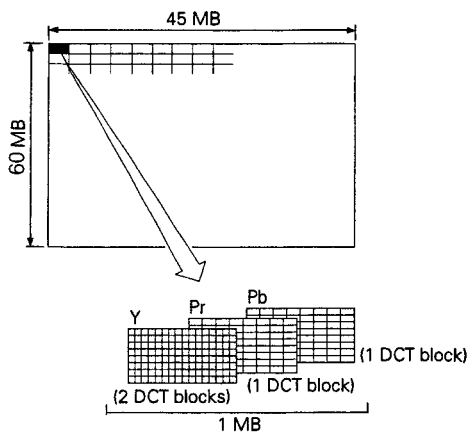

Shuffling

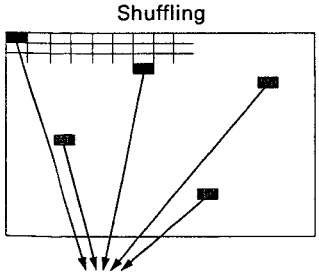

As continuous 5 macroblocks in a picture are uniformly formed into fixed length data of the same bits, distortion of data occurs in detail image portions. Shuffling not only controls occurrence of such distortion but also disperses distortion to make it inconspicuous.

5 macroblocks are collected from various points of a picture and they are compressed to be a specified amount of data. This operation disperses data distortion caused by compression equally among theses macroblocks.

Fig. 8-3-1 (d)

3) Data compression

video data is compressed into 50 Mbps or 1/3.3 (50/166 Mbps) by high degree mathematical processing such as DCT (Discrete Cosine Transform), requantization, VLC (Variable Length Coding).

a) DCT (Discrete Cosine Transform)

DCT is a mathematical transformation theory utilized for DC-AC conversion of pixel value into frequency area. Since there is redundant data between neighboring pixels, DCT transforms pixel value into frequency area by DC-AC conversion. As a result, widely dispersed signal power can be concentrated in low frequency components which can easily be compressed.

Transformation of video data by DCT is carried out at a unit of DCT block, and transformed data are scanned zigzag as shown by Fig. 8-3-1. Since a plenty of zero values are detected as a result of the above-mentioned zigzag scan, code length can be shortened by the run length coding to be mentioned later.

b) Requantization

Requantization reduces amount of video data with little deterioration in picture quality, because low frequency components which signal power concentrate in are quantized fine while high frequency components which signal power is not dispersed in are quantized roughly.

In the requantization process, DCT output is splitted into four areas, which are respectively quantized by different quantizing steps. Quantizing step for each area is determined so that total amount of data of 5 macroblocks collected by shuffling fits in the specified amount. However, DC components are not requantized because they are important data.

c) VLC (Variable Length Coding)

Average code length can be shortened as a whole by allotting short code to high frequent matters and long code to low frequent matters. This coding method is called Variable Length Coding (VLC). The variable length coding adopted for the DIGITAL S format is constructed based on the Haffman coding in combination with the run length coding.

- Run length coding

The run length coding, which is an efficient method to code data of "0" that is apt to appear continuously, transforms data into groups which consist of continuous "0" data and data other than "0" following continuous "0" data.

- Haffman coding

Haffman coding can shorten total code length because it allots short length code to frequently appearing groups (consisting of continuous 0's and following data other than 0) processed by the run length coding.

DCT:
The screen is divided into blocks (8 x 8 pixels). DCT means obtaining conversion coefficient that shows how much of predetermined picture pattern (64 pictures) is contained in each block.
DCT feature:
Eventhough the coefficient values for fine pictures are deleted, picture degradation is low when compared with other compression methods and fast processing (from conversion to compression) is possible. (Especially, the lower compression ratio of 1:3.3 adopted by DIGITAL S can ignore the possible picture deterioration.)

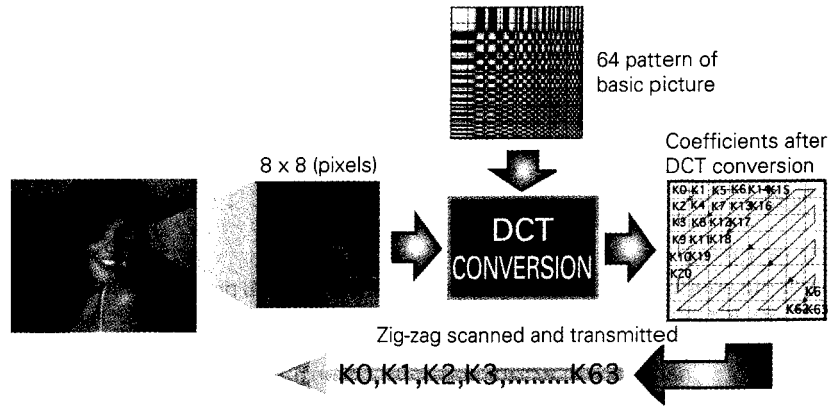

Fig. 8-3-1 (e) DCT conversion

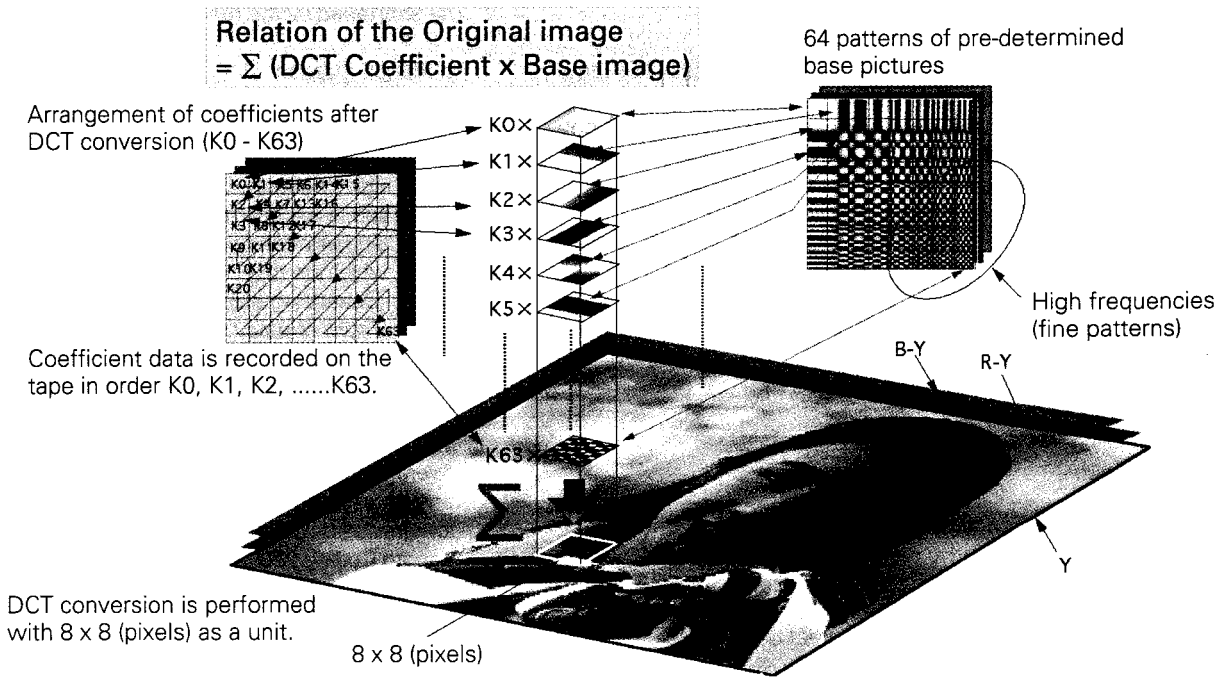

Fig. 8-3-1 (f) Relation of the Original image = Σ (DCT Coefficient x Base image)

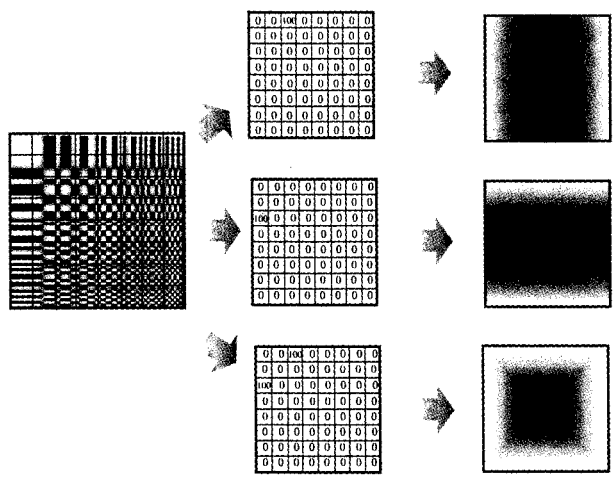

Fig. 8-3-1 (g) Actual image pattern by means of DCT coefficient

4) ECC (Error Correction Code)

If digitized recording signal is affected by noise, dust on tape or something other, PB signal may possibly differ from the recording signal. Therefore, digital VCR generally adds error correction code to recording signal and plays back the recording signal after correcting errors in recording signal by the correction code.

The DIGITAL S VCR adopts the Reed-Solomon product coding that demonstrates high ability to correct both random error and burst error (sequent errors) for the video and audio systems.

Video : Inner - RS (85, 77), Outer - RS (149, 138)

Audio : Inenr - RS (85, 77), Outer - RS (14, 9)

The first number in parenthesis shows code length and the second number shows amount of data. Difference between these two numbers corresponds to number of parities.

If error that cannot be corrected occurs in audio, it gives incongrous feeling to the listener as audio's peculiar characteristic. Therefore, redundancy of audio's outer parity is increased to raise the correction ability.

5) DCI

DCI rearranges video data, audio data and other data to be recorded on tape so as to meet the DIGITAL S format. As a result of this reformatting, video and audio data for a frame are divided into sectors by every 20 video data and every 5 audio data (for a channel).

Moreover, DCI modulates data of track format as mentioned below, and the modulated data are converted from parallel data to serial data before it is sent to the REC amplifier.

• Modulation (Channel coding)

Prior to recording of digital signal on tape, the recording data column is converted so that it conforms to the digital recording/playback system, however, operation of this conversion depends on the recording/playback characteristics of magnetic tape and machine being used, recording data rate, and so on.

Although rotary transformer is generally used as a means to send signal to the rotary drum in the digital VCR, it is weak in sending a digital signal that contains continuous "0" or "1" data because there are much DC components in such the signal. On the other hand, it is needed to generate a clock synchronizing with playback signal by a PLL circuit for obtaining playback data. For generating and supplying this clock stably, it is also required to reduce continuity of "0" or "1" data in length. From a viewpoint of recording density, data pattern consisting of repetitive "0" and "1" is undesirable because repetition of "0" and "1" brings the severest recording/playback condition.

Channel coding of the DIGITAL S VCR is basically operated by SI-NRZI (scrambled interleaved non-return zero inverted) and 24-25 modulation.

As a result of the above-mentioned operation, data conversion is performed so that "0" and "1" are arranged suitably for adding sync signal and for recording/playback.

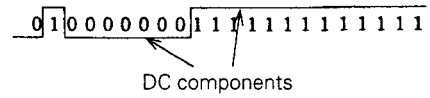

DC components

If recording data contains a lot of continuous 0's and 1's, a great deal of DC components are generated and the rotary transformer hardly transmits signal to the drum. Moreover, it is hard to read signal out because of difficulty in bit synchronization.

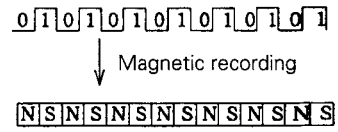

If recording data contains alternate repetition of "0" and "1", recording frequency becomes high and it is hard to read signal out.

Fig. 8-3-1 (h)

6) EQ/PLL

Fig. 8-3-1 (i) shows the block diagram of the EQ/PLL circuit. The pre-filter, equalizer and 1+D circuits shape the amplitude and phase characteristics of the reproduced signal and make the distinction between "1" and "0" easy. The PLL circuit generates the clock in synchronization with the reproduced signal and returns it to the original digital signal.

a) Eye pattern

Since the digital-S format employs scrambled, interleaved NRZI modulation, its waveform becomes as shown in Fig. 8-3-1 (e). The reproduced waveform is variable depending on the modulation system, but it is usually called the eye pattern because it has the shape of eyes. When the head is dirty, tracking is deviated or the reproduced RF waveform fluctuates or contains jitter, the opening (aperture ratio) of the eyes is decreased; in this case, the digital data cannot be identified and the error rate will deteriorate. When the error rate deteriorates to a level that cannot be corrected by the ECC circuit, block noise will be observed in the reproduced picture.

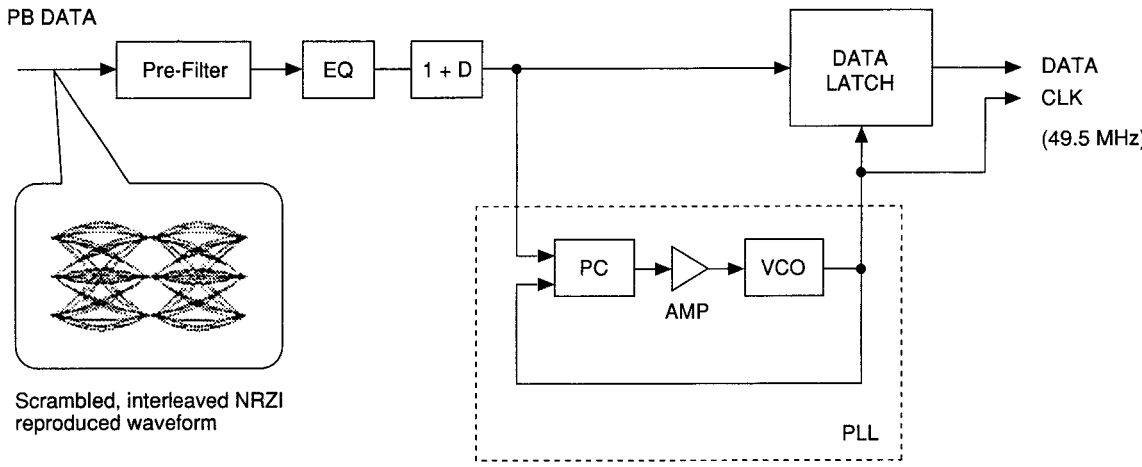

Fig. 8.3.1 (i)

b) Waveform equalization (1+D)

The circuit formed by IC303 to IC304 in the SS/RFP schematic diagram is the 1+D circuit. With the digital videotape recording, the reproduction characteristics of the lowest and the highest frequencies tend to deteriorate most. The low-frequency characteristic deterioration is produced by the reproduction of differential waveforms or the use of a rotary transformer.

When the low-frequency characteristic deteriorates, even when a 1-bit pulse is recorded, the pulse duration after reproduction may extend to several bits, thereby causing intersymbol interference.

The interference characteristic of the scrambled, interleaved NRZI modulation employed by the Digital-S format is equal to $1\text{-}D^2$. This means that the input of isolated pulses..00100 results in the output of ...0010 -10, or that intersymbol interference of -1 occurs in 2 bits after the isolated pulses (see Fig. 8-3-1(j)).

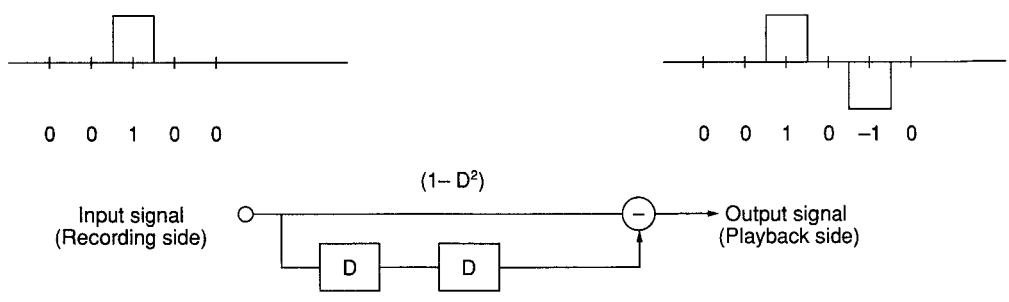

Fig. 8-3-1 (j)

It is by the signal processing on the playback side that the intersymbol interference should be eliminated. This interference characteristic ($1-D^2$) can be factorized into (1+D)(1-D), where (1-D) can be substituted by the differentiation characteristic during reproduction. On the other hand, (1+D) can be implemented by a 1-bit analog delay and addition operations. Since the reproduced waveform of a scrambled, interleave NRZI signal uses ternary (1, 0, -1), the original binary codes can be obtained by identifying "1" and "-1" in the ternary waveform after (1+D) conversion as "1" and "0" in it as "0" (see Fig. 8-3-1(k)).
FL301 and FL401 on the SS/RFP board, from a 1-bit delay filter, the output of which is added to the original signal. R312 (R412) and VC301 (401) are used to adjust the timing correction.

c) PLL
The reproduced signal enters the PLL circuit after the equalizer.
The phase comparator compares the frequency and timing of the reproduced signal with those of the clock signal generated by the VCO, and feeds the error voltage back to the VCO. The VCO oscillates the 49.5 MHz clock in synchronization with the reproduced signal, and the clock is supplied to the data latch and DCI-P circuit.

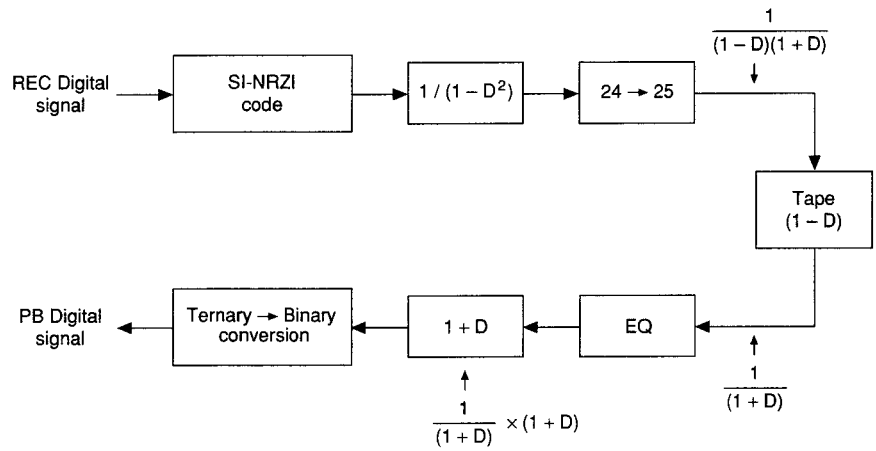

Fig. 8-3-1 (k)

(3) Recording signal delay circuit
(correction for high-speed auto tracking)
The IC231 MAIN board is a PLD IC which has been newly introduced in the DY-90 for the purpose of delaying recording data. Players since BR-D92/52 have been equipped with a high-speed auto tracking facility for a quicker start-up of the servo system than with the conventional auto-tracking system. Since the high-speed auto tracking facility is operated during playback, the DY-90 is not equipped with this facility as it is in principle, a recording unit. However, it is necessary to ensure a more accurate track pattern for properly operating the high speed auto tracking function during recording by controlling the recording position of the ITI signals.

The operating principle of the high-speed auto tracking system is explained below.
In Digital-S, the ITI signals are recorded at both ends and the center of one track. When the tracking centers are in alignment, the ITI output timing (T in the Fig. below) is equal between the leading and trailing ones of the paired heads.
Once the tracking centers are misaligned, the output timing becomes shifted. How much the tracking centers are misaligned is measured based on this timing shift to determine the tracking maximum. This allows reaching of the tracking maximum quicker than with the conventional hill-mounting control facility.

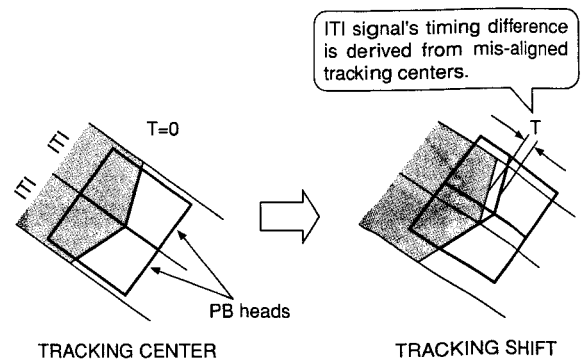

Fig. 8-3-1 (l)

ITI signal's timing difference is derived from mis-aligned tracking centers.

● **PR-D92/52 high speed AT operating flow chart**

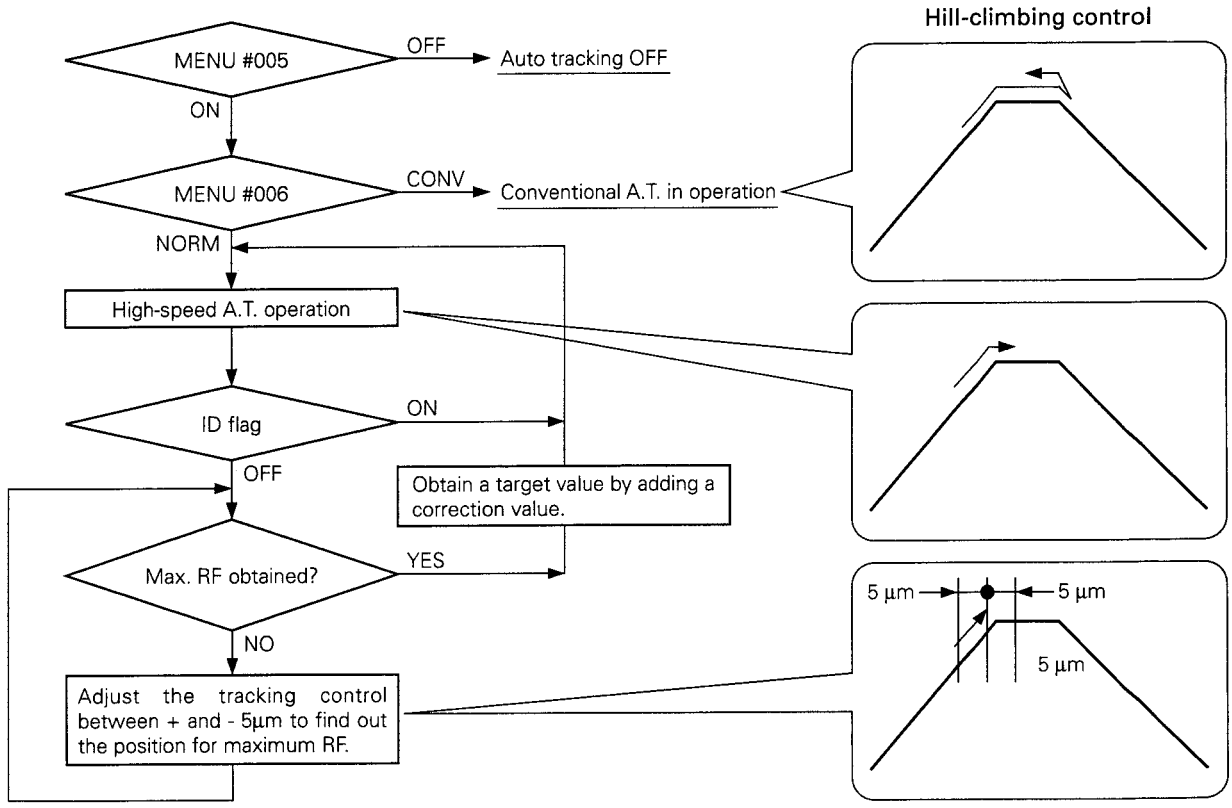

Fig. 8-3-1 (m) high speed AT operating flow chart

In order to correctly operate the high-speed auto tracking function, it is necessary to control the position of the ITI signals to be recorded on the tape. However, since there is a tolerance (T) in the mounting space between the paired recording heads, the actual recording position of the ITI signal on the tape is shifted from the set position.
While the BR-D92/52 has a facility for automatically measuring the tolerance at the head pair, the tolerance information (T) at the head pair is manually set with S201 in the DY-90. The ITI signal can be recorded in the correct position on the tape by delaying the recording timing on one of the heads.

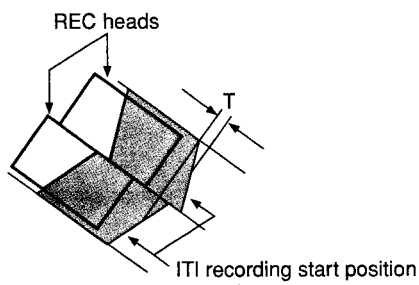

Fig. 8-3-1 (n)

DIP SW201 is connected to pins 1, 42, 43and 44 of IC231. S201 provides the setting of the mounting error information on the pair of recording heads. Based on this information, IC231 carries out an electrical correction to ensure that the recording of the ITI signal is in a correct position.

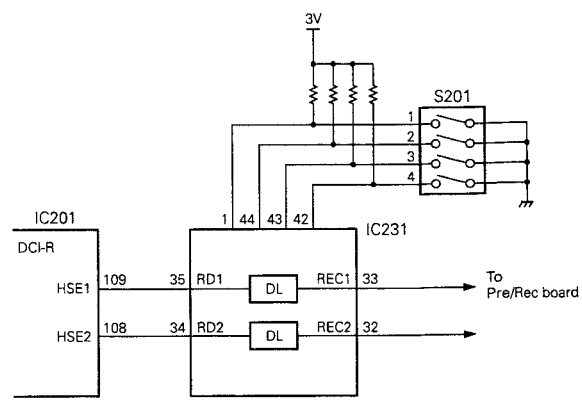

Fig. 8-3-1 (o)

8.3.2 Audio Circuit

(1) Analog input system

The signal flow in the analog input system is shown in Fig. 8-3-2. (a) (b)

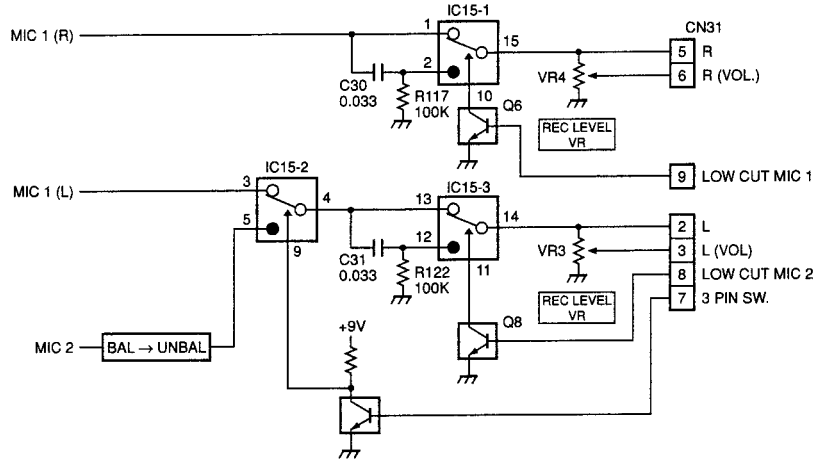

Fig. 8-3-2 (a) MIC input circuit on CP board (PAL model)

Primarily, the analog input system has two lines , MIC1 and MIC2. MIC1 is for a stereo -52 dBs unbalanced input which passes through the MT board into the CP board. MIC2 is for a monaural -60 dBs XLR-3 pin balanced input to be fed to the CP board. At the CP board, the input after undergoing balanced to unbalanced conversion is switched between the MIC1 L and MIC 2 channels by means of the 2C15-22 switch. This can be set by the MIC switch on the DY-90 side panel so that either one of MIC1 or MIC2 can be selected.

For the NTSC version, there are two channels of microphone input, MIC1 and MIC2. MIC1 is for a monaural -52 dB unbalanced input which is passed through the MT board to the CP board. It is then delivered to the Audio board. The REC LEVEL VR of MIC1 is not provided on the CP board but on the Audio board.

VR3 is the REC LEVEL VR for LINE input Audio-1 signal.

MIC2 is provided for the monaural -60 dBs, balanced SLR-3-pin input signal which is fed to the CP board. It is delivered to the Audio board after balanced to unbalanced conversion. REC LEVEL VR of MIC2 is a VR4 which is provided on the CP board.

IC15-1 and IC15-3 are low-cut filter ON/OFF switches whose setting can be changed on the service menu. C30, R117, C31 and R122 are low-cut filters. A low-cut frequency of approximately 50 Hz is given by $f = \frac{1}{2\pi CR}$

The MIC signal then enters the AUDIO board, passes through the ALC/limiter circuit, and is then fed to the MAIN board where it is converted to a digital signal.

The line signal entered through the rear panel is directly fed to the AUDIO board and after passing through the MIC (-60 dBs)/ LINE (+ 4 dBs) select circuit, likewise passes though the ALC/ limiter circuit. See Fig. 8-2-2 (c) for operation of the ALC/limiter as this depends on the AUTO/MANUAL and MIC/LINE input settings.

LINE	+4dBs	AUTO	ALC ON
		MANUAL	ALC/LIMITER OFF
	-60dBs	AUTO	ALC ON
		MANUAL	LIMITER ON
CAMERA		AUTO	ALC ON
		MANUAL	LIMITER ON

Fig. 8-3-2 (c)

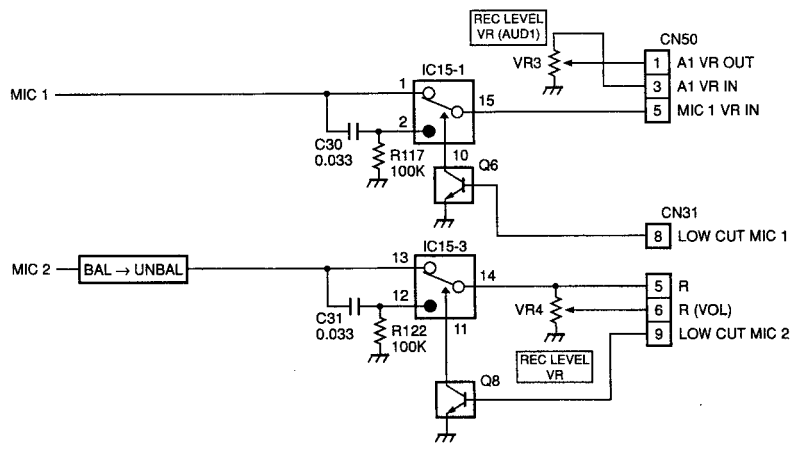

Fig. 8-3-2 (b) MIC input circuit on CP board (NTSC model)

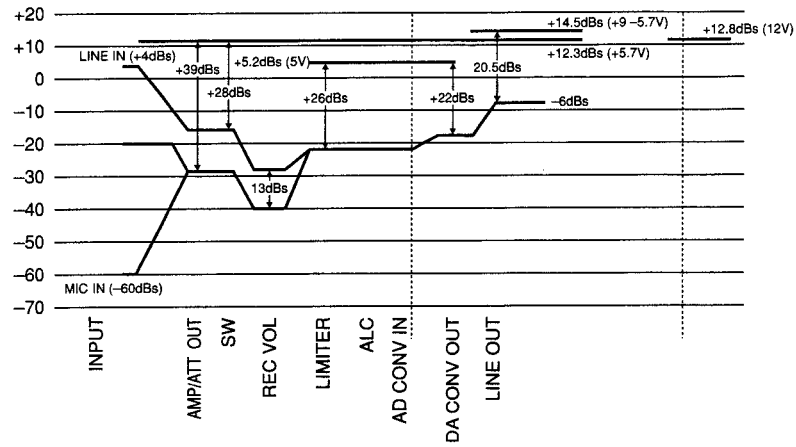

Fig. 8-3-2 (d) Signal levels in different circuits

(2) Limiter/ALC circuit

A significantly broad dynamic range is required for audio recording so that the limiter/ALC unit is definitely necessary when data is gathered from varying situations.

Limiter/ALC operation is accomplished by an electronic control called a VCA (Voltage Controlled Amplifier). The input audio signal is fed to the VCA to feed back the output signal; its signal level is first detected for conversion to a DC signal which then passes through the amplifier for controlling the VCA. (See Fig. 8-3-2 (e)). The difference between the ALC and the limiter is in their trigger levels: the limiter is triggered at the standard input (-60 dBs in case of MIC 2) plus + 19 dB. The ALC is triggered at the standard level and when it receives an audio input higher than the standard level, suppresses its audio level to the standard one. It does not raise the recording level if the input signal level is too low. (See Fig. 8-3-2 (f)).

Referring to the MIC circuit, IC303 and 304 form the VCA. The input signal is admitted through pin 7 and delivered from pin 9. It is then fed to pin 3 of IC309 (IC310) and goes out from pin 1. The VCA-controlled signal is again fed to pin 12 and goes out from pin 14 for level detection and rectification. While rectification is usually done with diodes, transistor rectification takes place here in this circuit. The rectified control voltage exits through the Q317 (Q318) emitter, passes through the IC309 (IC310) amplifier and is fed to pin 8 of IC303 (IC304) for gain control.

The attack time and recovery time of the limiter/ALC are given below.

Attack time: Approx. 50 - 100 msec
Recovery time: Approx. 4 sec.

Attack time refers to the length of time from entry of an excess signal to activation of the limiter/ALC and recovery time is the time taken for it to recover to the initial state.

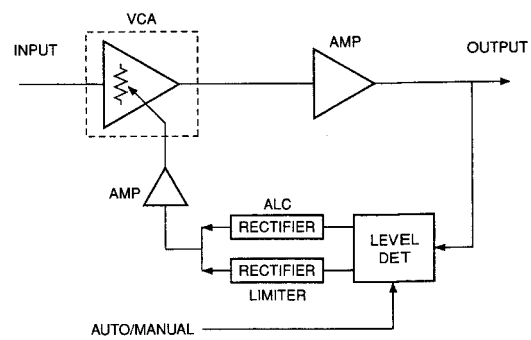

Fig.8-3-2 (e) Limiter/ALC circuit

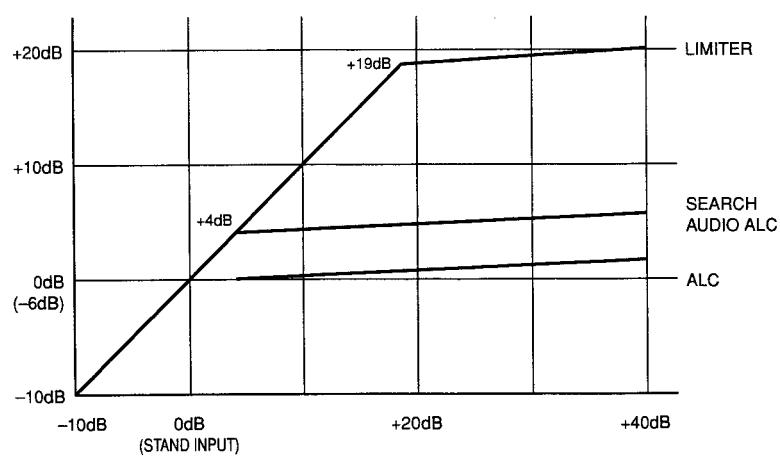

Fig.8-3-2 (f) Limiter/ALC operating characteristics

(3) A/D and D/A converter

The audio signal after passing through the limiter/ALC enters the MAIN board and is subjected to A/D conversion at a sampling frequency of 48 kHz and a quantification bit number of 16. IC706 is the A/D converter for the LINE signal and IC711 for the MIC signal.

As indicated in Fig. 8-3-2 (e), L-ch. balanced signals are fed to pins 1 and 2 and R-ch balanced signals to pins 27 and 28. BCK (bit clocks) are fed to pin 15 at a frequency of 64 fs (fs = 48 kHz). Over-sampled data is converted to 16 bit data of 48 kHz (fs) by the digital filter in the IC. Over-sampling makes an ideal conversion performance possible regardless of input frequency and input amplitude. Clocks of 256 fs frequency are also supplied as master clocks.

A/D converted digital data is delivered from pin 16 as L/R-ch mixed serial signals. The L/R switching signal is fed to pin 14 so that L-ch data is delivered at "H" and R-ch data at "L" alternately. As serial data, 16-bit data and 3-bit flag bits are delivered sequentially from MSB.

IC712 is a D/A converter. The playback system, having only one D/A converter, is able to play back only 2 channels, so that serial data at the selected two of the four channels is fed to pin 2. As the clocks, LRCK: fs=48 kHz are fed to pin 7, bit clocks (BCK2: 65fs) to pin 3 and master clocks (MCK: 256 fs) to pin 5.

The data over-sampled in the IC is delivered from pin 13 (R-ch and pin 16 (L-ch) as analog output.

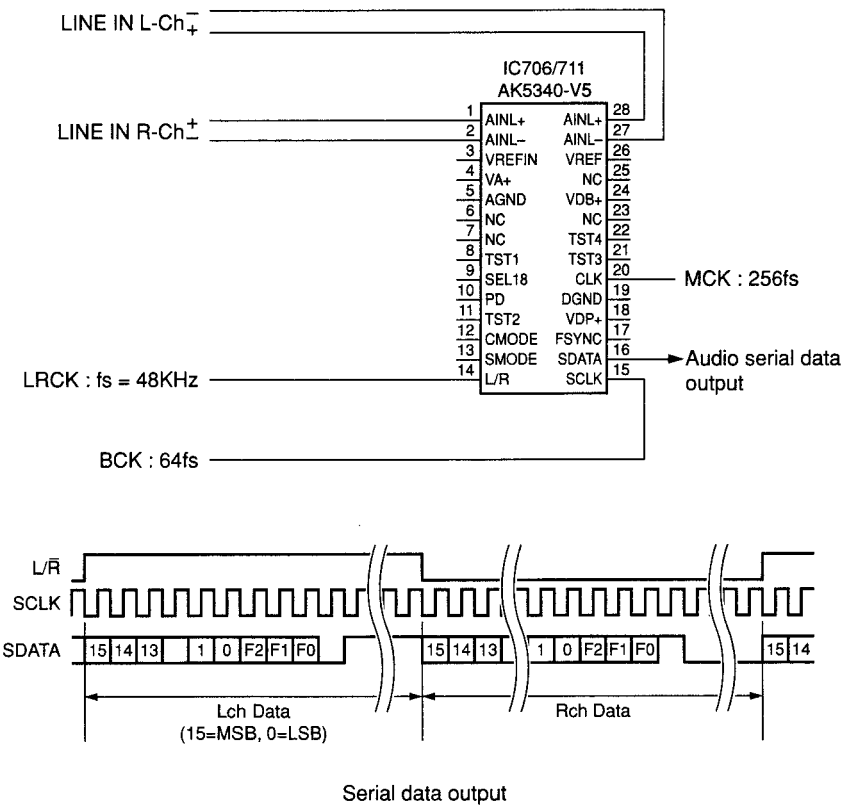

Fig. 8-3-2 (g) A/D converter

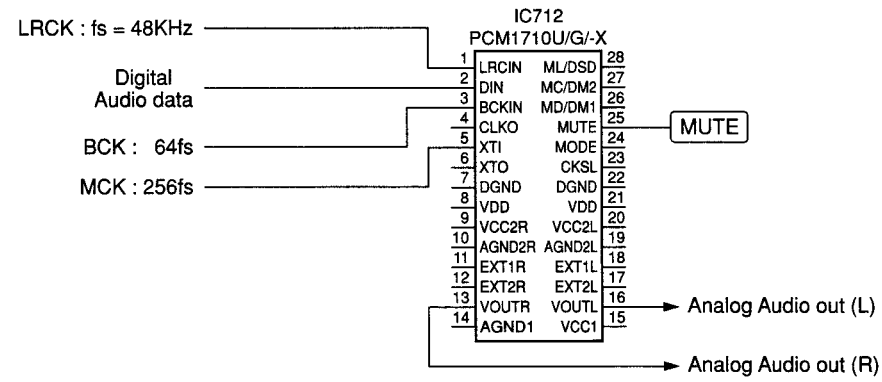

Fig. 8-3-2 (h) D/A converter

8.3.3. System Control & Servo System Circuit

(1) System Control

IC601 is an 8 bit microprocessor for controlling the VTR section. It serves to control the VTR's mechanical parts and servo systems. The functions of its terminals are given below.

IC602 is an IC for expansion which mainly converts the information from the mechanical parts to bus data for communication with IC601, IC603 is an EP ROM, while IC601 is an IC for address data latching.

PIN No.	IN/OUT	NAME	DESCRIPTION
1	IN/OUT	EEP1 DATA	EEPROM data
2	OUT	EEP1 CLOCK	EEPROM clock
3	IN	NTSC/PAL	NTSC/PAL conversion
4	IN	PFP1	
5	IN	PFP0	
6	IN	TRP2	Tracking pulse 2
7	IN	TRP1	Tracking pulse 1
8	IN	TRP0	Tracking pulse 0
9	IN	POWER IN S/S	"H" with POWER ON
10	OUT	SEL PF1/PF2	RF signal CH-!/CH-2 conversion
11	BUS	WR	WR/RD control
12	BUS	RD	
13	OUT	FULL ERASE	"H" in full-erase mode
14	OUT	REEL BRAKE	Reel brake control
15	OUT	REEL M BRAKE	Reel main brake control
16	BUS	ASTB	Latch enable output
17	—	VSS	GND
18	BUS	A15	Address bus
19	BUS	A14	
20	BUS	A13	
21	BUS	A12	
22	BUS	A11	
23	BUS	A10	
24	BUS	A9	
25	BUS	A8	
26	BUS	A7/D7	Data bus
27	BUS	A6/D6	
28	BUS	A5/D5	
29	BUS	A4/D4	
30	BUS	A3/D3	
31	BUS	A2/D2	
32	BUS	A1/D1	
33	BUS	A0/D0	
34	OUT	DRUM PWM	Drum PWM output
35	OUT	CAP PWM	Capstan PWM output
36	IN	VDD	Power +5V
37	—	MODE	Not used (+5V)
38	OUT	(P86)	Not used
39	—	XT2	
40	—	VSS	GND
41	IN	X2	Crystal 12 MHz (main clock)
42	IN	X1	
43	IN	PST	Reset signal input
44	OUT	M. MOTOR +	Mode motor control (FWD)
45	OUT	M. MOTOR –	Mode motor control (REV)
46	OUT	CFG–A PWM	PWM output (for CAP FG A BIAS) FG DUTY AUTO ADJ
47	OUT	CFG–B PWM	PWM output (for CAP FG A BIAS) FG DUTY AUTO ADJ
48	OUT	REEL PWM	Reel motor PWM output
49	OUT	LOAD PWM	Loading motor PWM output
50	IN	CAP FWD DET	Capstan forward/reverse detection input "H" in FWD

PIN No.	IN/OUT	NAME	DESCRIPTION
51	OUT	REC CTL–	REC CTL pulse output (-)
52	OUT	HID P/DFF	HID pulse output
53	IN	TEST MODE	Warning cancel (S601)
54	OUT	OPE–L LATCH	Operation LED latch
55	OUT	REC CTL +	REC CTL pulse output (+)
56	IN	DPG/SPA P	Drum PG/SPA signal input
57	IN	OPE COVER SW	Operation cover SW input
58	OUT	OPE–L DATA	Operation LED data
59	OUT	OPE–L CLK	Operation LED clock
60	IN	NMI	Not used
61	IN	—	
62	IN	SP REEL FG	Reel FG input (8 Hz -28 Hz)
63	IN	TU REEL FG	
64	IN	CAP X2 FG	Capstan x 2 FG Input (NTSC: 3740 Hz, PAL: 3728 Hz, REC mode)
65	IN	DRUM FG	Drum FG input (2100 Hz)
66	IN	PB CTL	PB TL pulse input (NTSC): 30 Hz, PAL: 25 Hz, PLAY mode)
67	IN	TSR/REF FLD	TSR input
68	IN	BATT REMAIN	Battery remaining detection (A/D CONV IN)
69	IN	KEY A	Operation key scan input (STOP, REW, FF, PLAY, EJECT)
70	—	(ANI2)	Not used
71	—	(ANI3)	
72	—	(ANI4)	
73	IN	DEW	DEW sensor input
74	IN	CAP FG A	Capstan FG A input (NTSC: 1870 Hz, PAL: 1864 Hz, REC mode)
75	IN	TAPE LED	Tape LED detection (normally 1V DC)
76	IN	END SENS	End sensor detection ("H" when detecting)
77	IN	BEGIN SENS	Begin sensor detection ("H" when detecting)
78	IN	BATT REM	Battery data input (for Anton Bauer battery)
79	IN	RF ENV1	RF signal input (leading head)
80	IN	RF ENV2	RF signal input (lagging head)
81	—	—	Not used
82	IN	DC12 IN	DC 12V IN (XLR 4P) detecting ("L" when detecting)
83	—	AVDD	Power supply for A/D converter
84	—	AVREF	Reference power for A/D converter
85	—	AVSS	GND
86	—	—	Not used
87	IN	CAP FG–B	Capstan FG B input (NTSC: 1870 Hz, PAL: 1864 Hz)
88	IN	FPS	Reference signal input (NTSC:15 Hz, PAL: 12.5 Hz)
89	IN/OUT	JB CLK	Clock for A/V microprocessor communications
90	IN	VDD	+ 5V
91	OUT	JB DATA OUT	Data for A/V microprocessor communications
92	IN	JB DATA IN	
93	OUT	POWER ON SW–REG	Servo switching regulator ON
94	OUT	(P06)	TAPE LED drive
95	OUT	CTL SW1	PB. CTL GAIN SW
96	OUT	REEL FWD	Reel direction (FWD: "H")
97	OUT	CAP FWD CTL	Capstan direction (FWD: "H")
98	OUT	TAPE REV	Tape direction (REV: "H")
99	OUT	SPA SEL	Drum PG/SPA switching signal
100	OUT	SERVO REC	"L" when servo REC

Table 8-3-3

(2) Recording Start-Stop operation

The timing signal during the editing point recording is different between TC Preset REC RUN mode and REGEN mode.
In REC RUN mode, a zero-frame edit pulse is recorded at the end of recording same as with GY-Y2/BR-S422. This is accomplished by changing the duty ratio of a CTL signal to mark an edit point. The T/C generator in REC mode then stops to advance two frames after the marking.
During the editing point recording, the zero-frame edit pulse is detected during assembly playback, whereupon recording and T/C data advancement starts two frames after the detected edit pulse. This enables you to do editing just at zero frame.
In case of REGEN mode, the record end point is stored in memory in the form of time code data. Editing point recording at zero frame is made possible by gen-locking the time code generator at PB time code data during assembly playback.

1) STANDARD SPECIFICATION

T/C GEN MODE	AEF SETUP TIME	EDITING ACCURACY	REFERENCE TIMING
①REC RUN MODE	0.8 SEC WITHIN	±0 FRAME	ZERO FLAME EDITING PULSE
②REGEN MODE	1.5 SEC WITHIN	±0 FRAME	TIME CODE DATA

2) BACKSPACE OPERATION

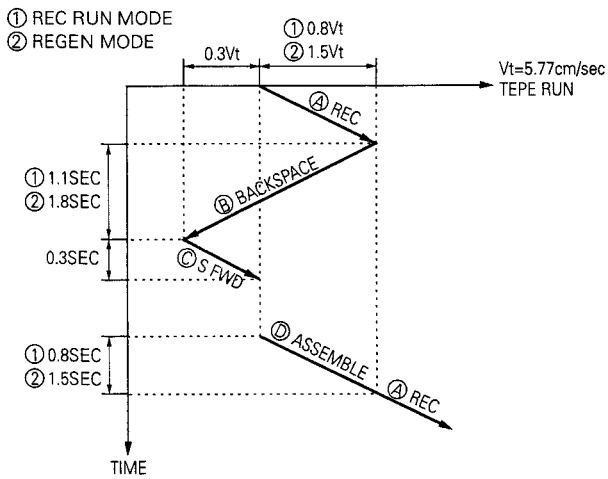

	Ⓐ	Ⓑ	Ⓒ	Ⓓ
T/C GEN	RUN	STOP	STOP	① STOP ② REGEN
SERVO	REC	SEARCH	PB	REC-PLAY
VIDEO	REC	CUE REVIEW	E-E	① E-E ② PB
AUDIO	REC	SEARCH	E-E	① E-E ② PB
TAPE DRIVE	FWD	REV(X2)	FWD	FWD
MECHA POSITION	FWD	FWD	FWD	FWD

Fig. 8-3-3 (a)

(3) Servo System

The block diagram of the drum, capstan and reel servo circuit is shown in Fig. 8-3-3(a). Each motor control unit consists of an MDA section and a switching regulator section. Q901to Q909 are switching regulators and IC901 is an IC for switching.
First referring to the reel system, the phase/speed control signal is delivered from pin 48 of IC601 as a PWM signal. It passes through the LPF and is fed to pin 6 of IC809 as a reel error signal. IC809 serves as an MDA IC for the reel which controls rpm with reel error voltage. It also includes a supply power control circuit, with its pin 3 for the voltage to be supplied to the motor (VM) and its pin 4 for the signal for controlling the supply voltage (VS).
Most of the power consumed by the IC's themselves is lost between the collectors and emitters of the output stage transistors. In the case of reel servo Q809 to Q811, the loss becomes higher as the voltage between C and E increases with a greater output current.
The voltage given by subtracting a voltage applied to the motor from the supply voltage is such a voltage between C and E. The lower the current, the lower is the voltage applied to the motor so that a greater voltage will be applied across C and E. Thus, in order to ensure an efficient use of power, it is necessary to vary the supply voltage (VM) depending on the output current, that is, the supply voltage should be suppressed for a low current output and increased for a higher current output. It is important to avoid applying an excess voltage to the section between C and E of the output stage transistors.
The power control facility (VS) pin 4 has been provided for this purpose. The power control signal (VS) is passed through the operator amplifier (IC902) and is fed to the switching IC (pin 17 and 18 of IC901. Based on this control signal, the power control signal (VS) is passed through the operation amplifier (IC902) and is fed to the switching IC (pin 17 and 18 of IC901). Based on this control information, the switching signal from pin 15 is supplied in the switching regulators Q901 to Q903, so as to supply the reel motor with power.
Likewise, for the drum servo, the phase/speed control signal is delivered from pin 34 of IC601 as a PWM signal. It passes through the LPF and is delivered from pin 5 of CN53 to the MDA board as a drum error signal to control the drum rotation. The power control signal (VS) is entered through pin 6 of CN53 and is fed to pins 5, 6 of the switching IC901. The switching signal from pin 8 is then supplied in the switching regulators Q907 to Q909 so as to control the motor power supply. The motor power (VM) is delivered through pin 7 of CN53 to the MDA board.
In the case of controlling the capstan motor, the phase/speed control signal is delivered from pin 35 of IC601 as a PWM signal and passes through the LPF to provide a capstan error voltage. In the case of the capstan servo, there is no VS signal from the MDA so that the capstan signal is fed to pins 12, 13 of IC901 as VS.
The switching signal from pin 10 controls the Q904 to Q906 switching regulators. The capstan VM power is delivered through pin 3 or CN50 to the capstan motor for directly controlling the motor.

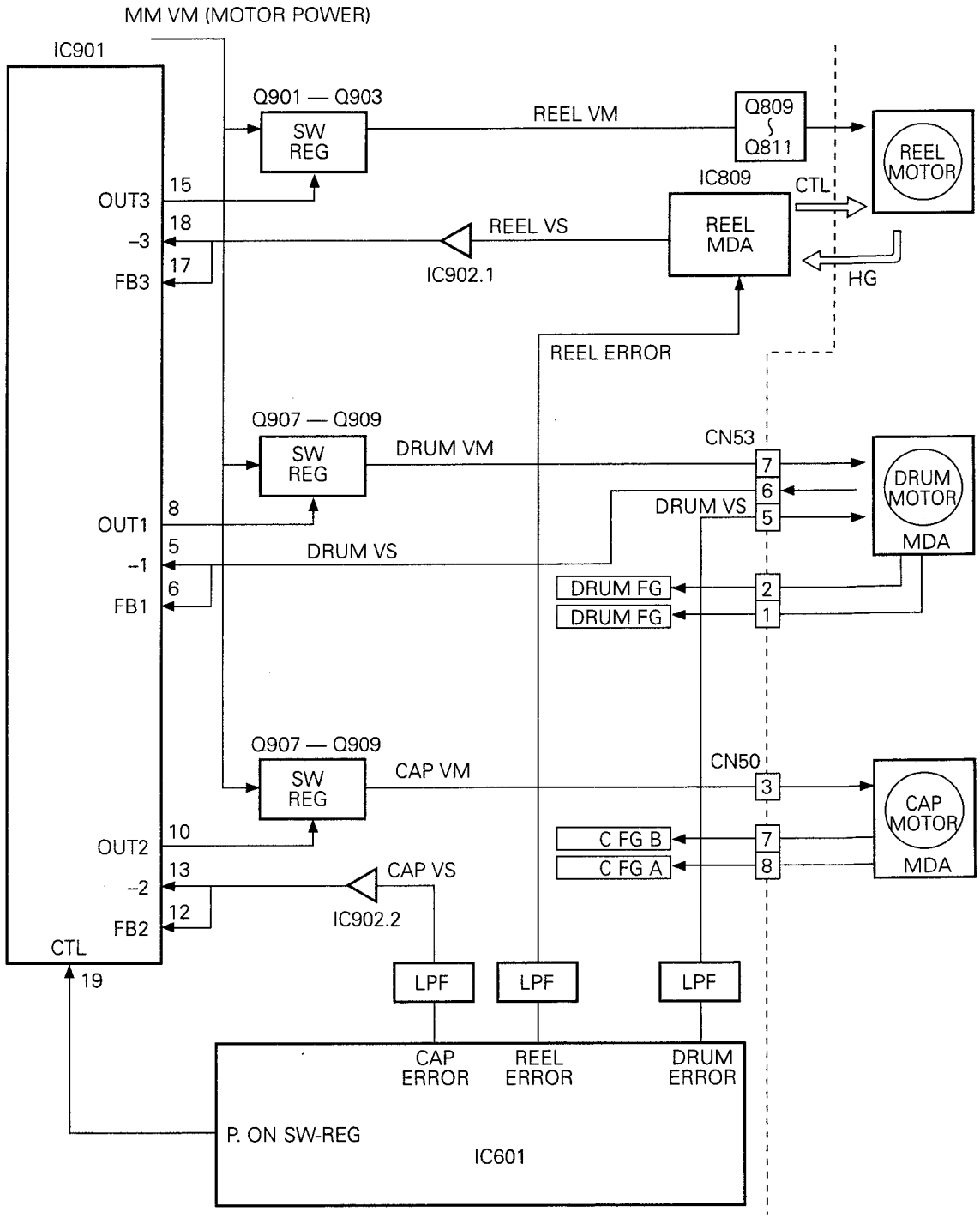

Fig. 8-3-3 (b) Servo circuit.

8.4 DY-90 Function Comparison List Classified by Destination

Some of the accessories functions and specifications for DY-90 differ depending on destination (country).
Please refer to the list below for the details.

MODELNAME	DY-90E	DY-90 Japan domestic version	DY-90U	DY-90E (X) for China version	DY-90EC for China version	DY-90EC (K) for China version (Semi-knockdown)
BATTERY HOLDER	Anton-Bauer	BH-P27 type	BH-P27 type	BH-P27 type	BH-P27 type	BH-P27 type
COLOR FILTER	1 : 3200K 2 : 5600K+ 1/4ND 3 : 5600K 4 : 5600K+ 1/16ND	1 : 3200K 2 : 5600K+ 1/4ND 3 : 5600K 4 : 5600K+ 1/16ND	1 : 3200K 2 : 5600K 3 : 5600K+ 1/16ND 4 : EFFECT (cross)	1 : 3200K 2 : 5600K+ 1/4ND 3 : 5600K 4 : 5600K+ 1/16ND	1 : 3200K 2 : 5600K+ 1/4ND 3 : 5600K 4 : 5600K+ 1/16ND	1 : 3200K 2 : 5600K+ 14ND 3 : 5600K 4 : 5600K+ 1/16ND
4CH AUDIO SYSTEM	Select by Menu Stereo MIC REC available	Select by Menu Stereo MIC REC available	4ch fixed DA1 : AUD1 DA2 : MIC2 DA3 : AUD2 DA4 : MIC1 Stereo MIC REC not available	Select by Menu Stereo MIC REC available	Select by Menu Stereo MIC REC available	Select by Menu Stereo MIC REC available
Accessory List & packing	Mini MIC Tripod base Set up box Double carton (Refer to page 7-1)	Mini MIC Tripod base Set up box Double carton (Refer to page 7-1)	Mini MIC Tripod base Set up box Double carton (Refer to page 7-1)	Mini MIC Tripod base Set up box Double carton (Refer to page 7-1)	Mini MIC Tripod base Set up box MIC holder (KA-A90U) Shoulder strap With CB-P90U (Refer to page 7-2)	Mini MIC Tripod base Set up box MIC holder (KA-A90U) Shoulder strap VF-P116E MV-P615U With CB-P90U (Refer to page 7-2)
Special setting (electrical)	None	None	None	Gamma : MAX Master black : +4 Color Matrix : different	Gamma : MAX Master black : +4 Color Matrix : different	Gamma : MAX Master black : +4 Color Matrix : different
CPboardS1-8 (DIP SW)	ON	OFF	ON	OFF	OFF	OFF

8.5 COMPATIBILITY CHART (for SERVICE)

(1) DY-90E Circuit Board Assembly Version Chart

Some early production models of DY-90E have circuit board assembly which are incompatible.
And software ROM version had been changed some times, too.
So in this section, there are compatibility chart for board assembly and software version.
Please use following as a reference when servicing the applicable models.

DY-90E Board Assembly Version Chart Diagram

Board name \ Serial NO.	XXXX0021 and after	XXXX0271 and after
MAIN board	SCK2534-E0A	SCK2534-E0B, E1A
CP board	SCK2526-00A	SCK2326-P0B
IC3 on CP board (ROM ver.)	V1-00, V1-01	V1-02
IC4 on CP board (ROM ver.)	V1-00	V1-01, -02, -03, -04, -05, -06, -07

There is compatibility between these circuit boards.

Fig. 8-4-2

NOTE:

- SCK25XX-XXX means, board assembly part number. (parts are mounted)
- IC3 (ROM) on CP board have software program for IC309 and IC310 (PLD IC) on MAIN board.
- IC4 (ROM) on CP board have software program for Camera control.
- Serial number of this chart should be used only reference.
- The set which was product XXXX0271 and after, added some electrical adjustment ITEM for camera process. So please refer to Section 3. 3. 3. -7 Black adjustment 2 part.